MAT'L NO (LOOSE PC)	ENG NO (LOOSE PC)	MAT'L NO (ON TAPE)	ENG NO (ON TAPE)	MAT'L NO (ON STRIP)	ENG NO (ON STRIP)	MALE TAB SIZE	"D" ±.010 (0.25)	"L" MAX	"T" MAX	"W" MAX	"H" REF
190020001	AA-5261	190020002	AA-5261T	190020004	AA-5261Z	.250 x .032 (6.35 x 0.81)	.156 (3.96)	.88 (22.4)	.20 (5.1)	.38 (9.7)	.560
190020019	AA-5283	190020020	AA-5283T	190020059	AA-5283Z	.205 x .020 (5.21 x 0.51)	.125 (3.18)	.80 (20.3)	.21 (5.3)	.32 (8.1)	.600
190020021	AA-5285	190020022	AA-5285T	190020023	AA-5285Z	.205 x .032 (5.21 x 0.81)					
190020005	AA-5267	190020007	AA-5267T	190020008	AA-5267Z	.187 x .020 (4.75 x 0.51)					
190020009	AA-5271	190020010	AA-5271T	190020012	AA-5271Z	.187 x .032 (4.75 x 0.81)					
190020013	AA-5275	190020014	AA-5275T	190020015	AA-5275Z	.110 x .020 (2.79 x 0.51)	.230 (5.84)		.19 (4.8)	.23 (5.8)	
190020016	AA-5279	190020017	AA-5279T	190020018	AA-5279Z	.110 x .032 (2.79 x 0.81)					

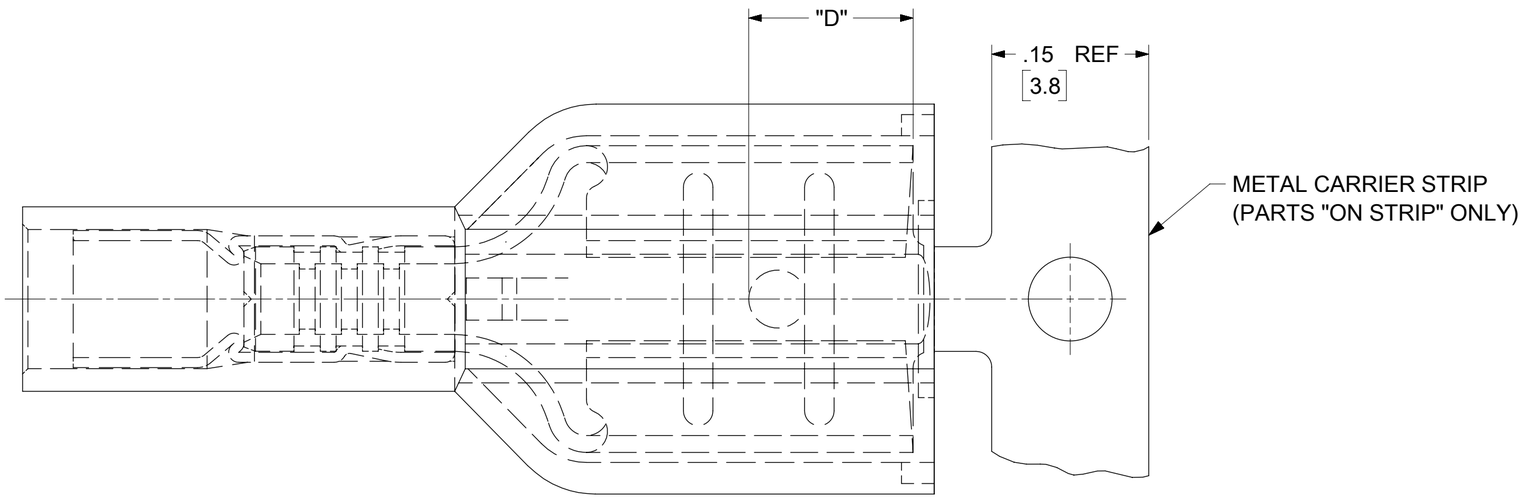

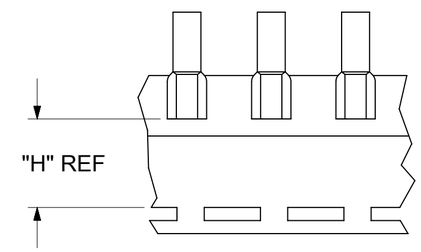

PARTS ON TAPE

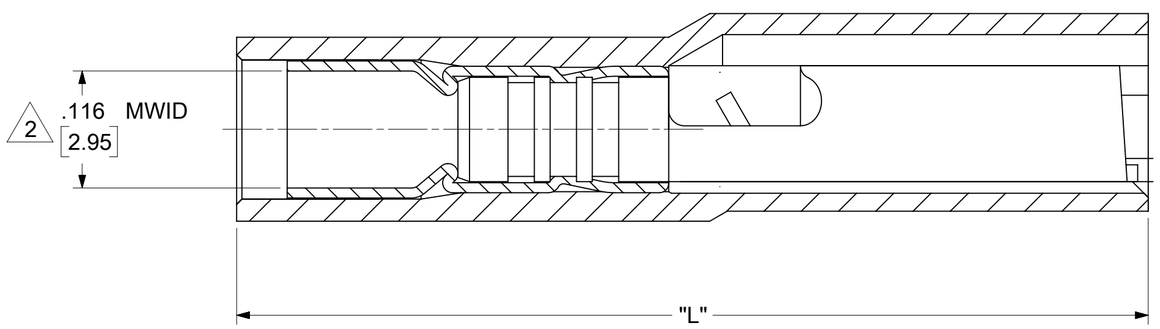

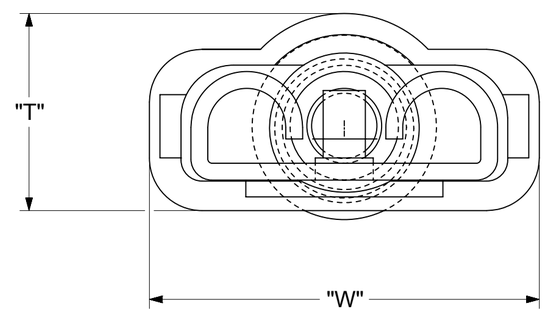

NOTES:
1. MATERIAL: TERMINAL - TIN PLATED BRASS.
   FERRULE - TIN PLATED BRASS.
   INSULATION - NYLON, RED.
2. MWID = MAXIMUM WIRE INSULATION DIAMETER.
3. MUST BE RoHS COMPLIANT.

DOCUMENT STATUS	P1	RELEASE DATE	2025/09/16 16:37:13

FUNCTIONAL SYMBOLS: FA = 0, FC = 0, FP = 0
DIVISIONAL SYMBOLS

THIS DRAWING CONTAINS INFORMATION THAT IS PROPRIETARY TO MOLEX ELECTRONIC TECHNOLOGIES, LLC AND SHOULD NOT BE USED WITHOUT WRITTEN PERMISSION

DIMENSION UNITS: INCH/MM
SCALE: NTS

GENERAL TOLERANCES (UNLESS SPECIFIED)

	MM	INCH
4 PLACES	±	±
3 PLACES	±	± 0.005
2 PLACES	± 0.13	± 0.01
1 PLACE	± 0.25	±
0 PLACES	±	±
ANGULAR TOL	± °	

DRAFT WHERE APPLICABLE MUST REMAIN WITHIN DIMENSIONS

CURRENT REV DESC: UPDATED CHART

EC NO: 834716
DRWN: DEANNM1 2025/09/08
CHK'D: ETHRODAHL 2025/09/16
APPR: ETHRODAHL 2025/09/16

INITIAL REVISION:
DRWN: BENDERLE 2005/04/25
APPR: RDEROSS 2005/04/26

THIRD ANGLE PROJECTION | DRAWING: C-SIZE | SERIES: 19002

molex

AVIKRIMP FEMALE FIQD
22-18 AWG

PRODUCT CUSTOMER DRAWING

DOCUMENT NUMBER	DOC TYPE	DOC PART	REVISION
SD-19002-003	PSD	001	D3

MATERIAL NUMBER	CUSTOMER	SHEET NUMBER
SEE CHART	GENERAL MARKET	1 OF 1

FORMAT: Eng-legs-master-lb-pro3-C
REVISION: E1
DATE: 2021/05/01