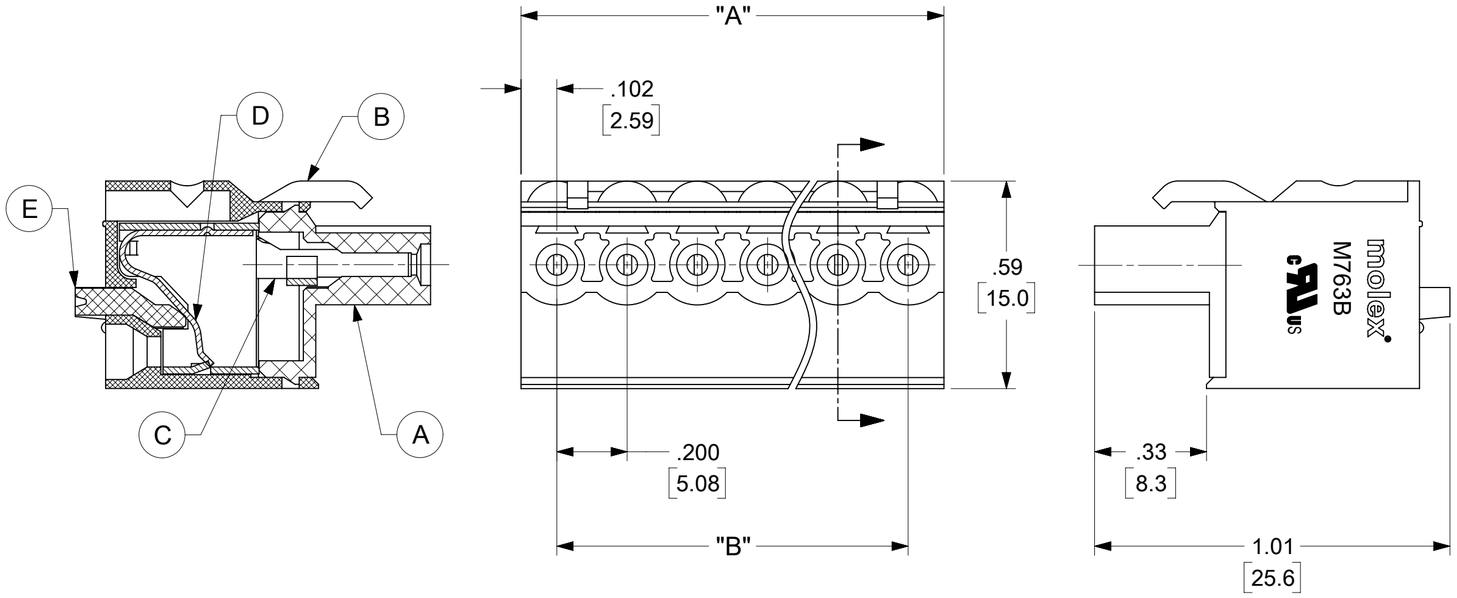

PART NUMBER DATA							
CIRCUITS	PART NUMBER	ENGINEERING NUMBER	COLOR	DIM. "A"		DIM. "B"	
				IN	mm	IN	mm
2	397270002	M763B-00-2-02-3	GREEN	.40	10.3	.200	5.08
3	397270003	M763B-00-2-03-3	GREEN	.60	15.3	.400	10.15
4	397270004	M763B-00-2-04-3	GREEN	.80	20.4	.600	15.23
5	397270005	M763B-00-2-05-3	GREEN	1.00	25.5	.800	20.31
6	397270006	M763B-00-2-06-3	GREEN	1.20	30.6	1.000	25.39
7	397270007	M763B-00-2-07-3	GREEN	1.40	35.6	1.199	30.46
8	397270008	M763B-00-2-08-3	GREEN	1.60	40.7	1.399	35.54
9	397270009	M763B-00-2-09-3	GREEN	1.80	45.8	1.599	40.62
10	397270010	M763B-00-2-10-3	GREEN	2.00	50.9	1.799	45.70
11	397270011	M763B-00-2-11-3	GREEN	2.20	56.0	1.999	50.77
12	397270012	M763B-00-2-12-3	GREEN	2.40	61.0	2.199	55.85
13		M763B-00-2-13-3	GREEN	2.60	66.1	2.399	60.93
14		M763B-00-2-14-3	GREEN	2.80	71.2	2.599	66.01
15		M763B-00-2-15-3	GREEN	3.00	76.3	2.798	71.08
16	397270016	M763B-00-2-16-3	GREEN	3.20	81.3	2.998	76.16
17		M763B-00-2-17-3	GREEN	3.40	86.4	3.198	81.24
18		M763B-00-2-18-3	GREEN	3.60	91.5	3.398	86.32
19		M763B-00-2-19-3	GREEN	3.80	96.6	3.598	91.39
20		M763B-00-2-20-3	GREEN	4.00	101.7	3.798	96.47
21		M763B-00-2-21-3	GREEN	4.20	106.7	3.998	101.55
22		M763B-00-2-22-3	GREEN	4.40	111.8	4.198	106.63
23		M763B-00-2-23-3	GREEN	4.60	116.9	4.398	111.70
24		M763B-00-2-24-3	GREEN	4.80	122.0	4.598	116.78

A2

REF. LAST 2 DIGITS OF PART NUMBER EQUALS CIRCUIT COUNT

ENGINEERING NUMBER LEGEND

M763B - 00 - 2 - XX - 3

SERIES
STYLE
PITCH
POLES
COLOR

CONTACT FACTORY FOR OPTIONAL COLORS

SPECIFICATIONS:

1. MATERIAL:
   - A. BODY1 : PA66, UL94 V-0
   - B. BODY2 : PA66, UL94 V-0
   - C. TERMINAL: BRASS TIN PLATED
   - D. SPRING: STAINLESS STEEL
   - E. BUTTON : PA66, UL94 V-0
2. WIRE SIZE: 24 TO 12AWG
3. ELECTRICAL RATING : 250V, 12A
4. WIRE STRIP LENGTH: .39 IN. (10.0mm)
5. DIELECTRIC VOLTAGE WITHSTAND: AC 2500V FOR 1 MINUTE
6. INSULATION RESISTANCE: DC 500V, 500MΩ
7. RATED IMPULSE VOLTAGE: 4000V, PLUS AND MINUS 5 TIMES EACH
8. OPERATING TEMPERATURE:-40°C TO +105°C
9. DIMENSIONS SHOWN ARE FOR REFERENCE ONLY

TOLERANCES			
MM	TOL	INCH	TOL
0-6	±0.25	0-.24	±.010
>6-30	±0.40	>.24-1.18	±.016
>30-120	±0.50	>1.18-4.76	±.020
>120	±0.80	>4.76	±.031

FUNCTIONAL SYMBOLS
FA = 0
FC = 0
FP = 0
DIVISIONAL SYMBOLS

THIS DRAWING CONTAINS INFORMATION THAT IS PROPRIETARY TO MOLEX ELECTRONIC TECHNOLOGIES, LLC AND SHOULD NOT BE USED WITHOUT WRITTEN PERMISSION

DIMENSION UNITS: INCH/MM
SCALE: 3:1

GENERAL TOLERANCES (UNLESS SPECIFIED)

	MM	INCH
4 PLACES	± ---	± ---
3 PLACES	± ---	± SEE CHART
2 PLACES	± SEE CHART	± SEE CHART
1 PLACE	± SEE CHART	± ---
0 PLACES	± ---	± ---
ANGULAR TOL	± ---	

DRAFT WHERE APPLICABLE MUST REMAIN WITHIN DIMENSIONS

CURRENT REV DESC: ADDED PN 397270016.
UPDATED LATEST TEMPLATE

EC NO: 762140
DRWN: ABENJAMINLW 2023/09/07
CHK'D: DACHAMMER 2023/09/07
APPR: JFMURPHY 2023/09/18

INITIAL REVISION:
DRWN: RSTONE 2014/05/02
APPR: JFMURPHY 2014/10/16

THIRD ANGLE PROJECTION | DRAWING: C-SIZE | SERIES: 39727

molex

PLUG, HORIZONTAL
WIRE TRAP, 5.08MM

PRODUCT CUSTOMER DRAWING

DOCUMENT NUMBER	DOC TYPE	DOC PART	REVISION
SD-39727-001	PSD	001	A2

MATERIAL NUMBER	CUSTOMER	SHEET NUMBER
SEE CHART	GENERAL MARKET	1 OF 1

DOCUMENT STATUS	P1	RELEASE DATE	2023/09/18 16:27:59

FORMAT: Eng-legs-master-lb-prod-C
REVISION: E1
DATE: 2021/05/01