# FEATURES SELECTION GUIDE

| CIRCUIT SIZE | FEATURES | | | | | |
|---|---|---|---|---|---|---|
| | FRICTION LOCKS | | DUAL SIDE SLOTS | CENTER POLARIZATION | PEGS | SHEET NO |
| | (1) DUAL | (2) CENTER | (3) | (4) | (5) | |
| 4 | N.A | N.A | YES | N.A | N.A | 2 - 3 |
| | N.A | YES | YES | N.A | N.A | |
| 6 | N.A | N.A | YES | N.A | N.A | 4 - 5 |
| | N.A | N.A | YES | N.A | YES | |
| | N.A | N.A | YES | YES | N.A | |
| | N.A | YES | YES | N.A | N.A | |
| | N.A | YES | YES | N.A | YES | |
| 8 TO 12 | N.A | N.A | YES | YES | YES | 6 - 7 |
| | N.A | N.A | YES | YES | N.A | |
| | N.A | YES | YES | N.A | N.A | |
| | N.A | YES | YES | N.A | YES | |
| 14 TO 50 | YES | N.A | YES | YES | N.A | 8 - 11 |
| | YES | N.A | YES | YES | YES | |

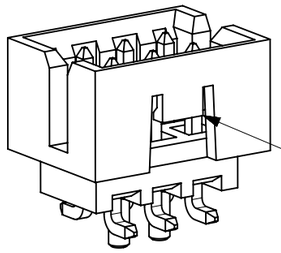


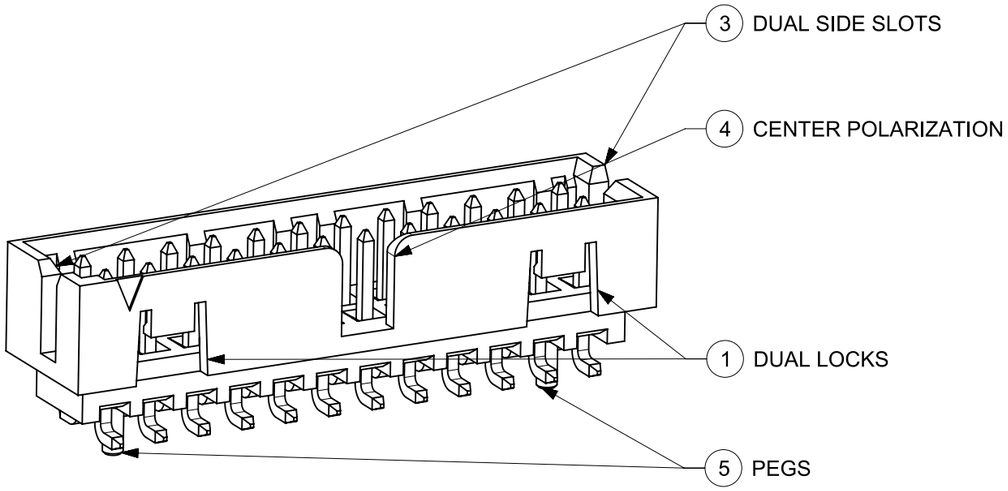


PLATING MEASUREMENT POINT
2.50

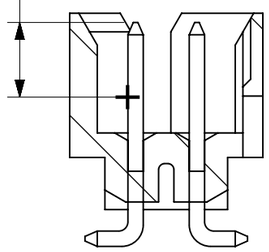

THIS DRAWING CONTAINS INFORMATION THAT IS PROPRIETARY TO MOLEX ELECTRONIC TECHNOLOGIES, LLC AND SHOULD NOT BE USED WITHOUT WRITTEN PERMISSION

FUNCTIONAL SYMBOLS: EA = 0, EC = 0, EP = 0
DIVISIONAL SYMBOLS

DIMENSION UNITS: mm
SCALE: NTS

GENERAL TOLERANCES (UNLESS SPECIFIED)

| | MM | INCH |
|---|---|---|
| 4 PLACES | ± | ± |
| 3 PLACES | ± | ± |
| 2 PLACES | ± 0.200 | ± |
| 1 PLACE | ± | ± |
| 0 PLACES | ± | ± |
| ANGULAR TOL | ± 3° | |

DRAFT WHERE APPLICABLE MUST REMAIN WITHIN DIMENSIONS

CURRENT REV DESC: ADDING NEW PART NUMBER

STATUS: Production
DRWN: Meghraj Boodagatti 2026-06-04
CHK'D: Meghraj Boodagatti 2026-06-10
APPR: Saravanakumar Murugesan 2026-06-10

INITIAL REVISION:
DRWN: GMENARLY 2015-05-22
APPR: KHLIM 2015-09-22

THIRD ANGLE PROJECTION
DRAWING: A3-SIZE
SERIES: 87832

molex

MILLIGRID
2MM PITCH, SMT VERTICAL SHROUDED HEADER

PRODUCT CUSTOMER DRAWING

| DOCUMENT NUMBER | DOC TYPE | DOC PART | REVISION |
|---|---|---|---|
| SD-87832-0001 | PSD | 001 | A25 |

MATERIAL NUMBER
CUSTOMER: GENERAL MARKET
SHEET NUMBER: 1 OF 13

FORMAT: Met-lega-TC-tb-prod-A3
REVISION: B
DATE: 2023/10/23

# 4 CIRCUITS

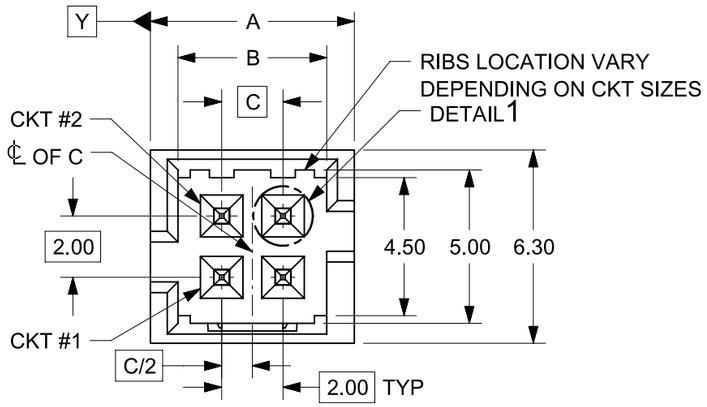


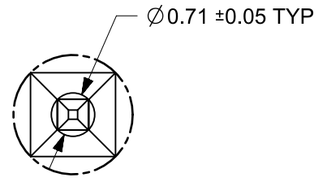


DETAIL 1

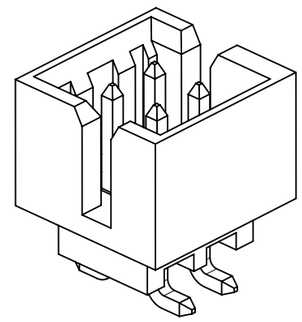

ISO VIEW OF HEADER
WITH ONLY DUAL SLOTS

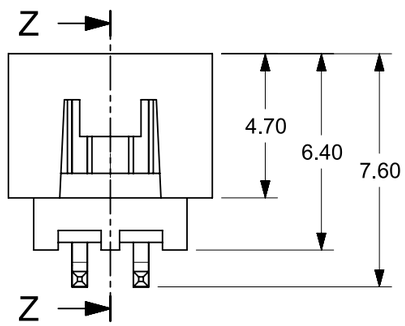


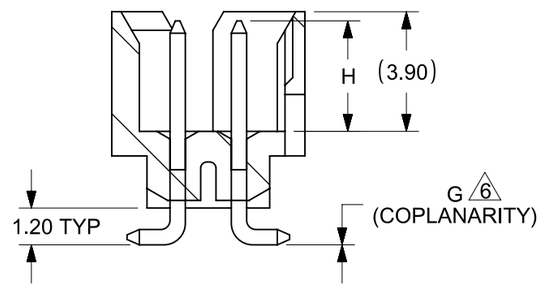


SECTION Z-Z

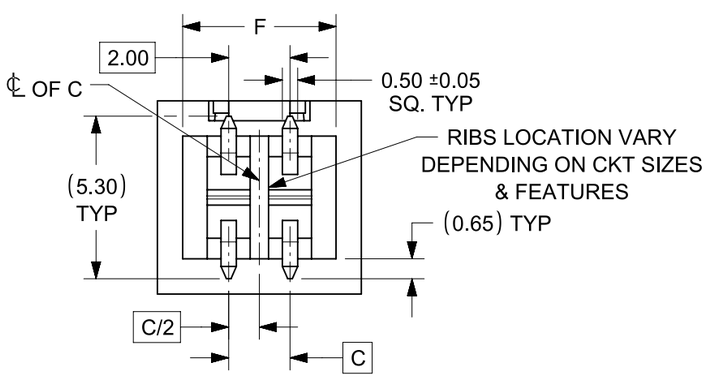


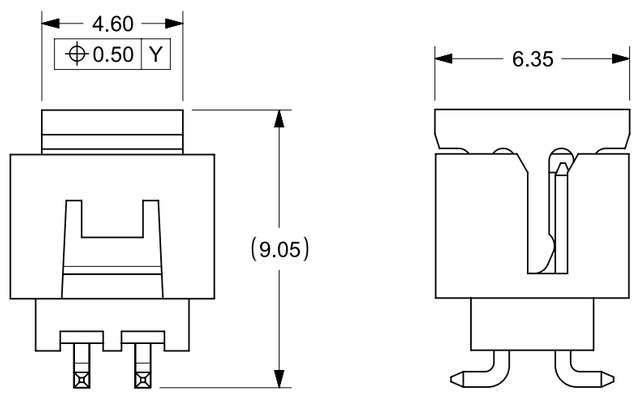


VIEW FOR HEADER WITH CAP

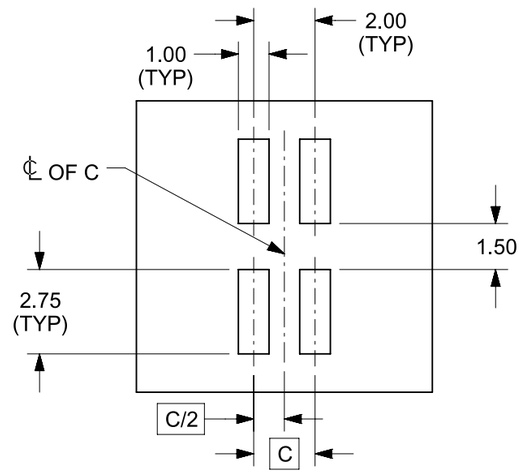


RECOMMENDED PCB LAYOUT

NOTES:
1. MATERIALS:
   HOUSING & CAP: 30% GF, NYLON, UL94V-0, COLOR: BLACK
   PIN: 0.50mm SQ. PHOSPHOR BRONZE
2. FINISHES: REFER TO PLATING OPTIONS
3. PRODUCT SPECIFICATION: PS-87831-027
4. PACKAGING SPECIFICATION: SEE PACKAGING SPECS TABLE ON SHEET 12
5. MATES WITH: A. MOLEX CRIMP RECEPTACLE HOUSING: 51110 SERIES
   AND CRIMP TERMINAL: 50394 SERIES
   B. MOLEX 2mm MILLIGRID DUAL ROW IDT: 87568 SERIES
   C. MOLEX 2mm MILLIGRID DUAL ROW RECEPTACLE:
   79107 (GOLD PLATED), 78787 (TIN PLATED)
6. COPLANARITY IS TO BE MEASURED BY RESTING THE SOLDERTAIL ON
   A GAUGE SURFACE
7. BEND DEPRESSION ON SMT TAIL IS ACCEPTABLE SO LONG AS IT
   DOES NOT AFFECT THE OVERALL COPLANARITY
8. TOP SURFACE OF CAP TO BE FLAT FOR THE PURPOSE OF
   PICK & PLACE BY VACUUM SUCTION NOZZLE

THIS DRAWING CONTAINS INFORMATION THAT IS PROPRIETARY TO MOLEX ELECTRONIC TECHNOLOGIES, LLC AND SHOULD NOT BE USED WITHOUT WRITTEN PERMISSION

FUNCTIONAL SYMBOLS: FA = 0, FC = 0, FP = 0
DIVISIONAL SYMBOLS

| DIMENSION UNITS | SCALE |
|---|---|
| mm | NTS |

GENERAL TOLERANCES (UNLESS SPECIFIED)

| | MM | INCH |
|---|---|---|
| 4 PLACES | ± | ± |
| 3 PLACES | ± | ± |
| 2 PLACES | ± 0.200 | ± |
| 1 PLACE | ± | ± |
| 0 PLACES | ± | ± |
| ANGULAR TOL | ± 3° | |

DRAFT WHERE APPLICABLE MUST REMAIN WITHIN DIMENSIONS

CURRENT REV DESC: ADDING NEW PART NUMBER

STATUS: Production
DRWN: Meghraj Boodagatti 2026-06-04
CHK'D: Meghraj Boodagatti 2026-06-10
APPR: Saravanakumar Murugesan 2026-06-10

INITIAL REVISION:
DRWN: GMENARLY 2015-05-22
APPR: KHLIM 2015-09-22

THIRD ANGLE PROJECTION | DRAWING: A3-SIZE | SERIES: 87832

molex

MILLIGRID
2MM PITCH, SMT VERTICAL SHROUDED HEADER

PRODUCT CUSTOMER DRAWING

| DOCUMENT NUMBER | DOC TYPE | DOC PART | REVISION |
|---|---|---|---|
| SD-87832-0001 | PSD | 001 | A25 |

| MATERIAL NUMBER | CUSTOMER | SHEET NUMBER |
|---|---|---|
| | GENERAL MARKET | 2 OF 13 |

FORMAT: Megaform-C-b-prod-A3
REVISION: B
DATE: 2023/10/23

# 4 CIRCUITS

| CKT SIZE | ASSY P/N WITHOUT CAP IN TUBE | ASSY P/N WITH CAP IN TUBE | ASSY P/N WITH CAP IN T&R | T&R OPTIONS (SEE SHEET 12) | PLATING OPTIONS | FRICTION LOCKS | | DUAL SIDE SLOTS | CENTER POLARIZATION | PEGS | DIMENSION | | | | | | | |
|---|---|---|---|---|---|---|---|---|---|---|---|---|---|---|---|---|---|---|
| | | | | | | DUAL | CENTER | | | | A | B | C | D | E | F | G (COPLAN) | H |
| 4 | 87832-0460 | 87832-0462 | 87832-5162 | 1 | 1 | N.A | N.A | YES | N.A | N.A | 6.65 | 4.85 | 2.00 | N.A | N.A | 5.00 | 0.10 | 3.60±0.20 |
| | 87832-0420 | 87832-0422 | 87832-5122 | 1 | 2 | | | | | | | | | | | | | |
| | 87832-0421 | 87832-0423 | 87832-5123 | 1 | 3 | | | | | | | | | | | | | |
| | 87832-0470 | 87832-0472 | 87832-5172 | 1 | 4 | | | | | | | | | | | | | |
| | 87832-0410 | 87832-0408 | 87832-0406 | 1 | 2 | N.A | YES | YES | N.A | N.A | | | | | | | 0.10 | |
| | | | 87832-5106 | 2 | 2 | | | | | | | | | | | | | |
| | 87832-0411 | 87832-0409 | 87832-0407 | 1 | 3 | | | | | | | | | | | | | |
| | 87832-0404 | N.A | N.A | N.A | 2 | | | | | | | | | | | | 0.10 | |

PLATING OPTIONS:

1 - 0.05-0.13µm/2-5µin GOLD IN CONTACT AREA AND
1.88µm/75µin MIN. MATTE TIN IN SOLDER TAIL AREA OVER
1.27µm/50µin MIN. NICKEL OVERALL.

2 - 0.38µm/15µin MIN. GOLD IN CONTACT AREA AND
1.88um/75µin MIN. MATTE TIN IN SOLDER TAIL AREA OVER
1.27µm/50µin MIN. NICKEL OVERALL.

3 - 0.76µm/30µin MIN. GOLD IN CONTACT AREA AND
1.88µm/75µin MIN. MATTE TIN IN SOLDER TAIL AREA OVER
1.27µm/50µin MIN. NICKEL OVERALL.

4 - 2.50µm/100µin MIN. MATTE TIN OVER 1.25µm/50µin MIN. NICKEL OVERALL.

THIS DRAWING CONTAINS INFORMATION THAT IS PROPRIETARY TO MOLEX ELECTRONIC TECHNOLOGIES, LLC AND SHOULD NOT BE USED WITHOUT WRITTEN PERMISSION

FUNCTIONAL SYMBOLS: EA = 0, EC = 0, EP = 0

DIVISIONAL SYMBOLS

DIMENSION UNITS: mm
SCALE: NTS

GENERAL TOLERANCES (UNLESS SPECIFIED)

| | MM | INCH |
|---|---|---|
| 4 PLACES | ± | ± |
| 3 PLACES | ± | ± |
| 2 PLACES | ± 0.200 | ± |
| 1 PLACE | ± | ± |
| 0 PLACES | ± | ± |
| ANGULAR TOL | ± 3° | |

DRAFT WHERE APPLICABLE MUST REMAIN WITHIN DIMENSIONS

CURRENT REV DESC: ADDING NEW PART NUMBER

STATUS: Production
DRWN: Meghraj Boodagatti 2026-06-04
CHK'D: Meghraj Boodagatti 2026-06-10
APPR: Saravanakumar Murugesan 2026-06-10

INITIAL REVISION:
DRWN: GMENARLY 2015-05-22
APPR: KHLIM 2015-09-22

THIRD ANGLE PROJECTION | DRAWING: A3-SIZE | SERIES: 87832

molex

MILLIGRID
2MM PITCH, SMT VERTICAL SHROUDED HEADER

PRODUCT CUSTOMER DRAWING

| DOCUMENT NUMBER | DOC TYPE | DOC PART | REVISION |
|---|---|---|---|
| SD-87832-0001 | PSD | 001 | A25 |

| MATERIAL NUMBER | CUSTOMER | SHEET NUMBER |
|---|---|---|
| | GENERAL MARKET | 3 OF 13 |

# 6 CIRCUITS

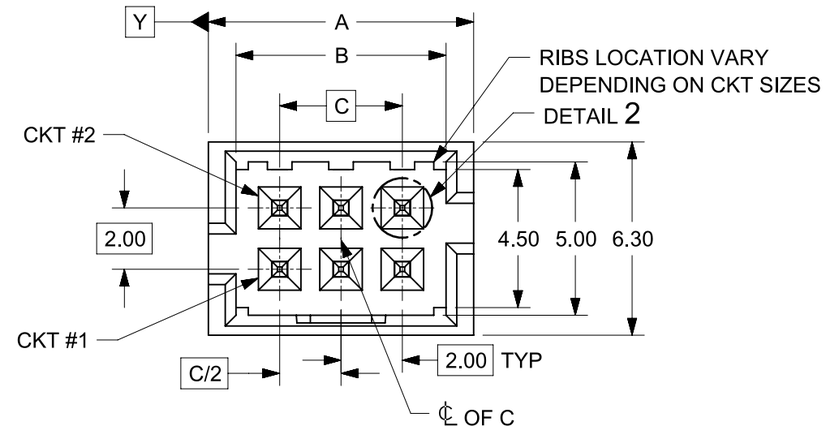


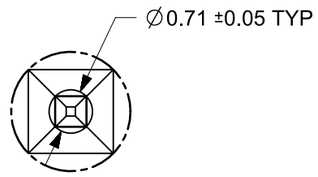


DETAIL 2

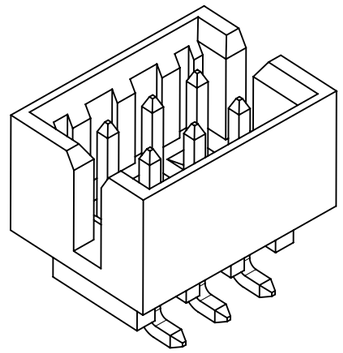

VIEW FOR HEADER WITH
ONLY DUAL SLOTS

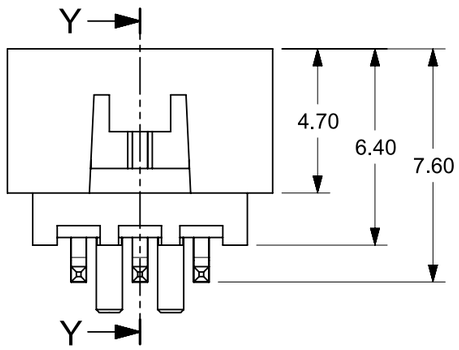


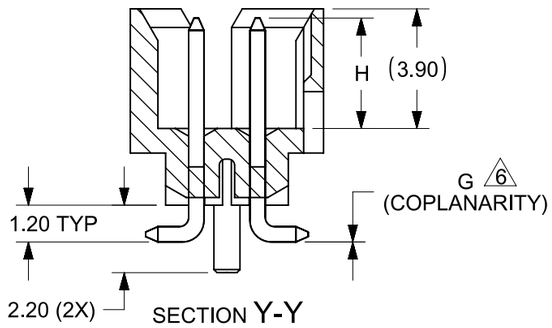


SECTION Y-Y

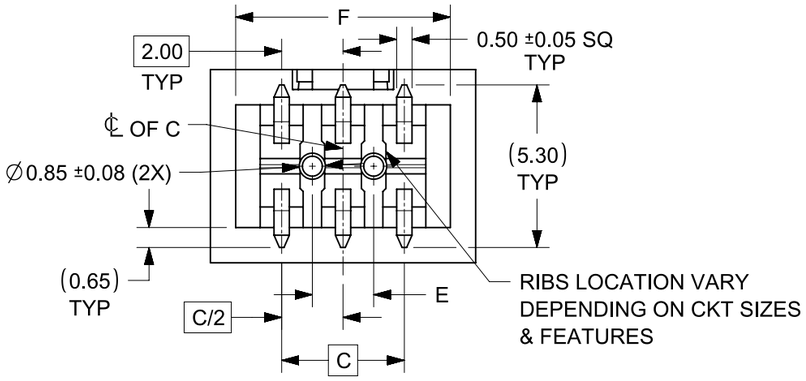


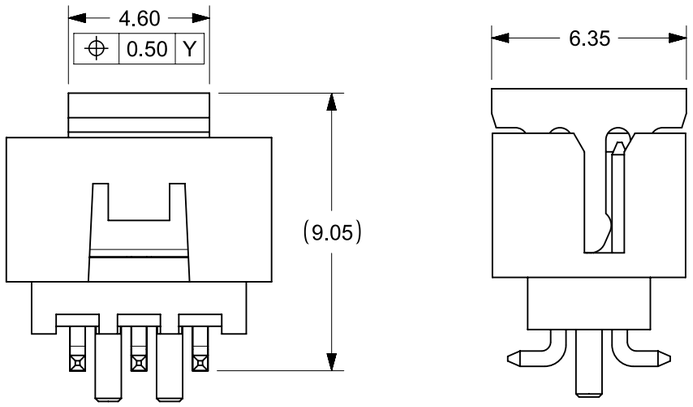


VIEW FOR HEADER WITH CAP

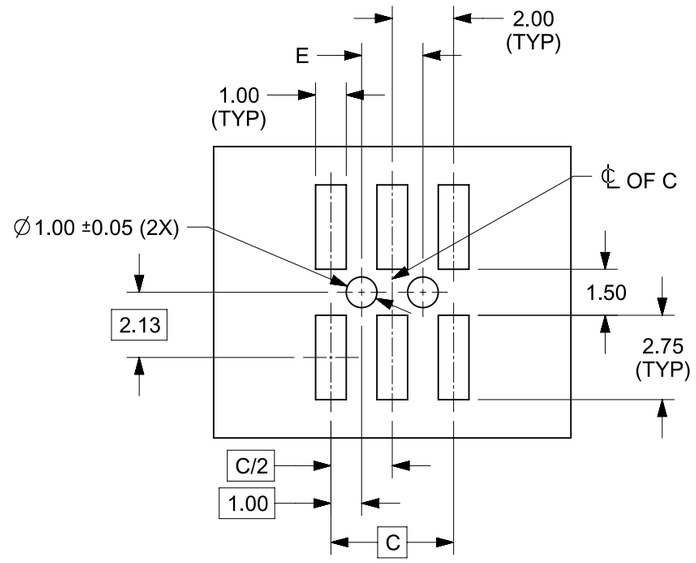


RECOMMENDED PCB LAYOUT

NOTES:
1. MATERIALS:
   HOUSING & CAP: 30% GF, NYLON, UL94V-0, COLOR: BLACK
   PIN: 0.50mm SQ. PHOSPHOR BRONZE
2. FINISHES: REFER TO PLATING OPTIONS
3. PRODUCT SPECIFICATION: PS-87831-027
4. PACKAGING SPECIFICATION: SEE PACKAGING SPECS TABLE ON SHEET 12
5. MATES WITH: A. MOLEX CRIMP RECEPTACLE HOUSING: 51110 SERIES
   AND CRIMP TERMINAL: 50394 SERIES
   B. MOLEX 2mm MILLIGRID DUAL ROW IDT: 87568 SERIES
   C. MOLEX 2mm MILLIGRID DUAL ROW RECEPTACLE:
   79107 (GOLD PLATED), 78787 (TIN PLATED)
6. COPLANARITY IS TO BE MEASURED BY RESTING THE SOLDERTAIL ON
   A GAUGE SURFACE
7. BEND DEPRESSION ON SMT TAIL IS ACCEPTABLE SO LONG AS IT
   DOES NOT AFFECT THE OVERALL COPLANARITY
8. TOP SURFACE OF CAP TO BE FLAT FOR THE PURPOSE OF
   PICK & PLACE BY VACUUM SUCTION NOZZLE

THIS DRAWING CONTAINS INFORMATION THAT IS PROPRIETARY TO MOLEX ELECTRONIC TECHNOLOGIES, LLC AND SHOULD NOT BE USED WITHOUT WRITTEN PERMISSION

| | | | |
|---|---|---|---|
| FUNCTIONAL SYMBOLS | DIMENSION UNITS: mm | SCALE: NTS | CURRENT REV DESC: ADDING NEW PART NUMBER |
| = 0 | GENERAL TOLERANCES (UNLESS SPECIFIED) | | |
| = 0 | MM / INCH | | |
| = 0 | 4 PLACES ± / ± | | STATUS: Production |
| DIVISIONAL SYMBOLS | 3 PLACES ± / ± | | DRWN: Meghraj Boodagatti 2026-06-04 |
| | 2 PLACES ± 0.200 / ± | | CHK'D: Meghraj Boodagatti 2026-06-10 |
| | 1 PLACE ± / ± | | APPR: Saravanakumar Murugesan 2026-06-10 |
| | 0 PLACES ± / ± | | INITIAL REVISION: |
| | ANGULAR TOL ± 3° | | DRWN: GMENARLY 2015-05-22 |
| | DRAFT WHERE APPLICABLE MUST REMAIN WITHIN DIMENSIONS | | APPR: KHLIM 2015-09-22 |

molex

MILLIGRID
2MM PITCH, SMT VERTICAL SHROUDED HEADER

PRODUCT CUSTOMER DRAWING

| DOCUMENT NUMBER | DOC TYPE | DOC PART | REVISION |
|---|---|---|---|
| SD-87832-0001 | PSD | 001 | A25 |

| THIRD ANGLE PROJECTION | DRAWING | SERIES | MATERIAL NUMBER | CUSTOMER | SHEET NUMBER |
|---|---|---|---|---|---|
| | A3-SIZE | 87832 | | GENERAL MARKET | 4 OF 13 |

# 6 CIRCUITS

| CKT SIZE | ASSY P/N WITHOUT CAP IN TUBE | ASSY P/N WITH CAP IN TUBE | ASSY P/N WITH CAP IN T&R | ASSY P/N WITHOUT CAP IN T&R | T&R OPTIONS (SEE SHEET 12) | PLATING OPTIONS | FRICTION LOCKS | | DUAL SIDE SLOTS | CENTER POLARIZATION | PEGS | DIMENSION | | | | | | | |
|---|---|---|---|---|---|---|---|---|---|---|---|---|---|---|---|---|---|---|---|
| | | | | | | | DUAL | CENTER | | | | A | B | C | D | E | F | G (COPLAN) | H |
| 6 | 87832-0660 | 87832-0662 | 87832-5262 | | 1 | 1 | N.A | N.A | YES | N.A | YES | 8.65 | 6.85 | 4.00 | N.A | 2.00 | 7.00 | 0.10 | 3.60±0.20 |
| | 87832-0620 | 87832-0622 | 87832-5222 | 87832-5230 | 1 | 2 | | | | | | | | | | | | | |
| | 87832-0621 | 87832-0623 | 87832-5223 | | 1 | 3 | | | | | | | | | | | | | |
| | 87832-0670 | 87832-0672 | 87832-5272 | | 1 | 4 | | | | | | | | | | | | | |
| | 87832-0612 | 87832-0616 | 87832-0614 | | 1 | 2 | N.A | N.A | YES | N.A | N.A | | | | | | | 0.10 | 3.60±0.20 |
| | 87832-0613 | 87832-0617 | 87832-0615 | | 1 | 3 | N.A | N.A | YES | YES | N.A | | | | | | | | |
| | 87832-0624 | 87832-0626 | 87832-0628 | | 1 | 2 | N.A | YES | YES | N.A | N.A | | | | | | | 0.10 | 3.60±0.15 |
| | 87832-0625 | 87832-0627 | 87832-0629 | | 1 | 3 | | | | | | | | | | | | | |
| | 87832-0610 | 87832-0608 | 87832-0606 | | 1 | 2 | N.A | YES | YES | N.A | YES | | | | | | | 0.10 | 3.60±0.20 |
| | 87832-0611 | 87832-0609 | 87832-0607 | | 1 | 3 | | | | | | | | | | | | | |
| | 87832-0604 | N.A | N.A | | N.A | 2 | N.A | YES | YES | N.A | YES | | | | | | | 0.10 | 3.60±0.20 |

PLATING OPTIONS:

1 - 0.05-0.13µm/2-5µin GOLD IN CONTACT AREA AND
1.88µm/75µin MIN. MATTE TIN IN SOLDER TAIL AREA OVER
1.27µm/50µin MIN. NICKEL OVERALL.

2 - 0.38µm/15µin MIN. GOLD IN CONTACT AREA AND
1.88µm/75µin MIN. MATTE TIN IN SOLDER TAIL AREA OVER
1.27µm/50µin MIN. NICKEL OVERALL.

3 - 0.76µm/30µin MIN. GOLD IN CONTACT AREA AND
1.88µm/75µin MIN. MATTE TIN IN SOLDER TAIL AREA OVER
1.27µm/50µin MIN. NICKEL OVERALL.

4 - 2.50µm/100µin MIN. MATTE TIN OVER 1.25µm/50µin MIN. NICKEL OVERALL.

THIS DRAWING CONTAINS INFORMATION THAT IS PROPRIETARY TO MOLEX ELECTRONIC TECHNOLOGIES, LLC AND SHOULD NOT BE USED WITHOUT WRITTEN PERMISSION

FUNCTIONAL SYMBOLS: EA = 0, EC = 0, EP = 0

DIVISIONAL SYMBOLS

DIMENSION UNITS: mm
SCALE: NTS

GENERAL TOLERANCES (UNLESS SPECIFIED)

| | MM | INCH |
|---|---|---|
| 4 PLACES | ± | ± |
| 3 PLACES | ± | ± |
| 2 PLACES | ± 0.200 | ± |
| 1 PLACE | ± | ± |
| 0 PLACES | ± | ± |
| ANGULAR TOL | ± 3° | |

DRAFT WHERE APPLICABLE MUST REMAIN WITHIN DIMENSIONS

CURRENT REV DESC: ADDING NEW PART NUMBER

STATUS: Production
DRWN: Meghraj Boodagatti 2026-06-04
CHK'D: Meghraj Boodagatti 2026-06-10
APPR: Saravanakumar Murugesan 2026-06-10

INITIAL REVISION:
DRWN: GMENARLY 2015-05-22
APPR: KHLIM 2015-09-22

THIRD ANGLE PROJECTION | DRAWING: A3-SIZE | SERIES: 87832

molex

MILLIGRID
2MM PITCH, SMT VERTICAL SHROUDED HEADER

PRODUCT CUSTOMER DRAWING

| DOCUMENT NUMBER | DOC TYPE | DOC PART | REVISION |
|---|---|---|---|
| SD-87832-0001 | PSD | 001 | A25 |

MATERIAL NUMBER | CUSTOMER: GENERAL MARKET | SHEET NUMBER: 5 OF 13

# 8 TO 12 CIRCUITS

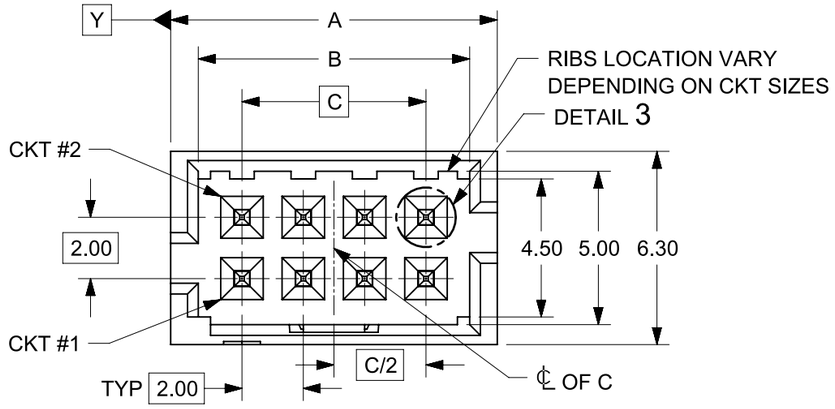


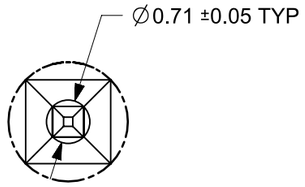


DETAIL 3

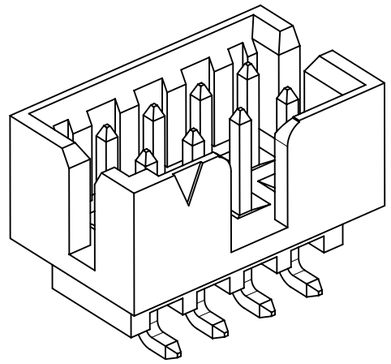

ISO VIEW OF HEADER WITH CENTER POLARIZATION AND DUAL SIDE SLOTS

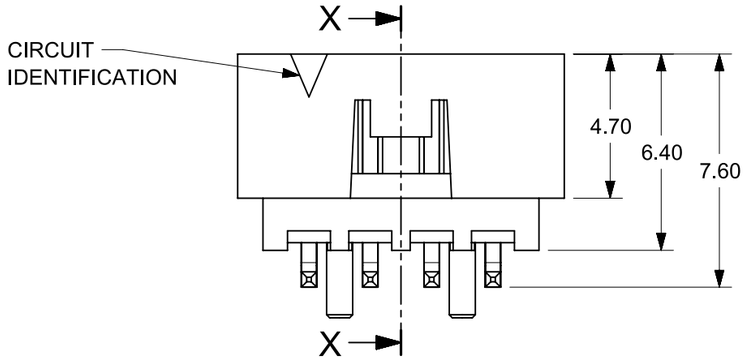


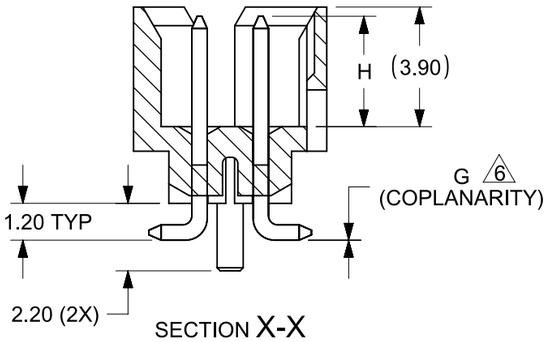


SECTION X-X

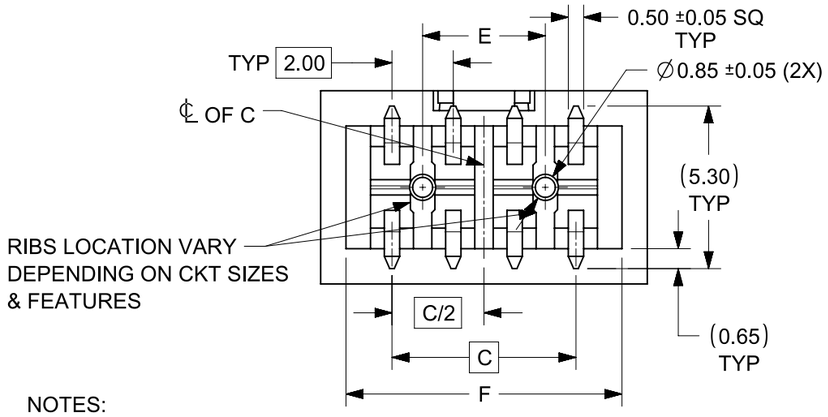


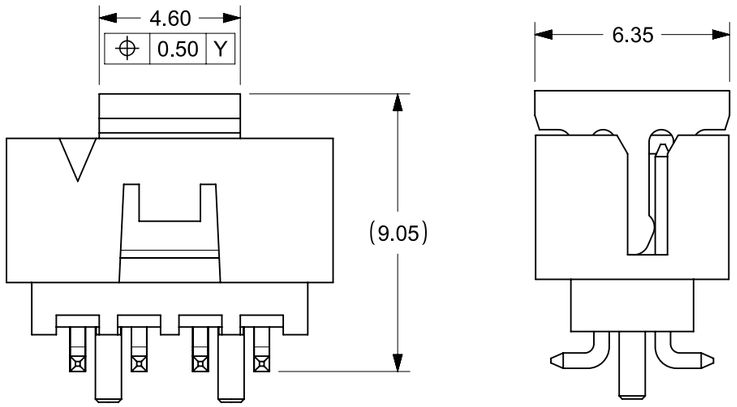


VIEW FOR HEADER WITH CAP

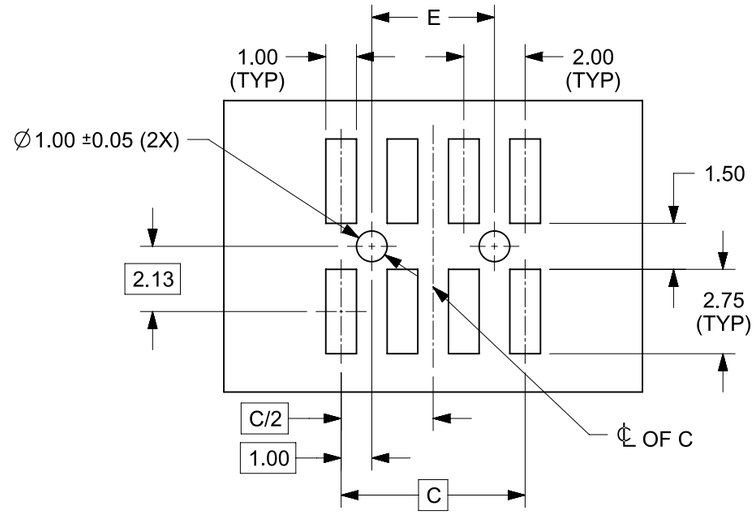


RECOMMENDED PCB LAYOUT

NOTES:

1. MATERIALS:
   HOUSING & CAP: 30% GF, NYLON, UL94V-0, COLOR: BLACK
   PIN: 0.50mm SQ. PHOSPHOR BRONZE
2. FINISHES: REFER TO PLATING OPTIONS
3. PRODUCT SPECIFICATION: PS-87831-027
4. PACKAGING SPECIFICATION: SEE PACKAGING SPECS TABLE ON SHEET 12
5. MATES WITH: A. MOLEX CRIMP RECEPTACLE HOUSING: 51110 SERIES
   AND CRIMP TERMINAL: 50394 SERIES
   B. MOLEX 2mm MILLIGRID DUAL ROW IDT: 87568 SERIES
   C. MOLEX 2mm MILLIGRID DUAL ROW RECEPTACLE:
   79107 (GOLD PLATED), 78787 (TIN PLATED)
6. COPLANARITY IS TO BE MEASURED BY RESTING THE SOLDERTAIL ON A GAUGE SURFACE
7. BEND DEPRESSION ON SMT TAIL IS ACCEPTABLE SO LONG AS IT DOES NOT AFFECT THE OVERALL COPLANARITY
8. TOP SURFACE OF CAP TO BE FLAT FOR THE PURPOSE OF PICK & PLACE BY VACUUM SUCTION NOZZLE

THIS DRAWING CONTAINS INFORMATION THAT IS PROPRIETARY TO MOLEX ELECTRONIC TECHNOLOGIES, LLC AND SHOULD NOT BE USED WITHOUT WRITTEN PERMISSION

| | |
|---|---|
| FUNCTIONAL SYMBOLS | FA = 0, FC = 0, FP = 0 |
| DIVISIONAL SYMBOLS | |
| DIMENSION UNITS | mm |
| SCALE | NTS |
| GENERAL TOLERANCES (UNLESS SPECIFIED) | MM / INCH |
| 4 PLACES | ± / ± |
| 3 PLACES | ± / ± |
| 2 PLACES | ± 0.200 / ± |
| 1 PLACE | ± / ± |
| 0 PLACES | ± / ± |
| ANGULAR TOL | ± 3° |
| DRAFT WHERE APPLICABLE MUST REMAIN WITHIN DIMENSIONS | |

CURRENT REV DESC: ADDING NEW PART NUMBER

STATUS: Production
DRWN: Meghraj Boodagatti 2026-06-04
CHK'D: Meghraj Boodagatti 2026-06-10
APPR: Saravanakumar Murugesan 2026-06-10

INITIAL REVISION:
DRWN: GMENARLY 2015-05-22
APPR: KHLIM 2015-09-22

THIRD ANGLE PROJECTION | DRAWING: A3-SIZE | SERIES: 87832

molex

MILLIGRID
2MM PITCH, SMT VERTICAL SHROUDED HEADER

PRODUCT CUSTOMER DRAWING

| DOCUMENT NUMBER | DOC TYPE | DOC PART | REVISION |
|---|---|---|---|
| SD-87832-0001 | PSD | 001 | A25 |

| MATERIAL NUMBER | CUSTOMER | SHEET NUMBER |
|---|---|---|
| | GENERAL MARKET | 6 OF 13 |

# 8 TO 12 CIRCUITS

| CKT SIZE | ASSY P/N WITHOUT CAP IN TUBE | ASSY P/N WITH CAP IN TUBE | ASSY P/N WITH CAP IN T&R | ASSY P/N WITHOUT CAP IN T&R | T&R OPTIONS (SEE SHEET 12) | PLATING OPTIONS | FRICTION LOCKS DUAL | FRICTION LOCKS CENTER | DUAL SIDE SLOTS | CENTER POLARIZ ATION | PEGS | DIMENSION A | DIMENSION B | DIMENSION C | DIMENSION D | DIMENSION E | DIMENSION F | DIMENSION G (COPLAN) | DIMENSION H |
|---|---|---|---|---|---|---|---|---|---|---|---|---|---|---|---|---|---|---|---|
| A24 | 87832-0860 | 87832-0862 | 87832-5362 | | 1 | 1 | N.A | N.A | YES | YES | YES | 10.65 | 8.85 | 6.00 | N.A | 4.00 | 9.00 | 0.10 | 3.60±0.20 |
| | 87832-0820 | 87832-0822 | 87832-5322 | 87832-5330 | 1 | 2 | | | | | | | | | | | | | |
| | 87832-0821 | 87832-0823 | 87832-5323 | | 1 | 3 | | | | | | | | | | | | | |
| | 87832-0870 | 87832-0872 | 87832-5372 | | 1 | 4 | | | | | | | | | | | | | |
| 8 | 87832-0812 | 87832-0816 | 87832-0814 | | 1 | 2 | N.A | N.A | YES | YES | N.A | | | | | | | 0.10 | 3.60±0.20 |
| | 87832-0824 | 87832-0826 | 87832-0828 | | 1 | 2 | N.A | YES | YES | N.A | N.A | | | | | | | 0.10 | 3.60±0.15 |
| | 87832-0825 | 87832-0827 | 87832-0829 | | 1 | 3 | | | | | | | | | | | | | |
| | 87832-0810 | 87832-0808 | 87832-0806 | | 1 | 2 | N.A | YES | YES | N.A | YES | | | | | | | 0.10 | 3.60±0.20 |
| | 87832-0811 | 87832-0809 | 87832-0807 | | 1 | 3 | | | | | | | | | | | | | |
| | 87832-0804 | N.A | N.A | | N.A | 2 | N.A | YES | YES | N.A | YES | | | | | | | 0.10 | 3.60±0.20 |
| | 87832-1060 | 87832-1062 | 87832-5462 | | 1 | 1 | N.A | N.A | YES | YES | YES | 12.65 | 10.85 | 8.00 | N.A | 6.00 | 11.00 | 0.10 | 3.60±0.20 |
| | 87832-1020 | 87832-1022 | 87832-5422 | 87832-5430 | 1 | 2 | | | | | | | | | | | | | |
| | 87832-1021 | 87832-1023 | 87832-5423 | | 1 | 3 | | | | | | | | | | | | | |
| | | | 87832-9423 | | 2 | | | | | | | | | | | | | | |
| | 87832-1070 | 87832-1072 | 87832-5472 | | 1 | 4 | | | | | | | | | | | | | |
| | 87832-1012 | 87832-1016 | 87832-1014 | | 1 | 2 | N.A | N.A | YES | YES | N.A | | | | | | | 0.10 | 3.60±0.20 |
| 10 | 87832-1019 | 87832-1045 | 87832-1035 | | 1 | 1 | | | | | | | | | | | | | |
| | 87832-1024 | 87832-1026 | 87832-1028 | | 1 | 2 | N.A | YES | YES | N.A | N.A | | | | | | | 0.10 | 3.60±0.15 |
| | N.A | N.A | 87832-1055 | | 1 | 1 | | | | | | | | | | | | | |
| | 87832-1025 | 87832-1027 | 87832-1029 | | 1 | 3 | | | | | | | | | | | | | |
| | 87832-1010 | 87832-1008 | 87832-1006 | | 1 | 2 | N.A | YES | YES | N.A | YES | | | | | | | 0.10 | 3.60±0.20 |
| | 87832-1011 | 87832-1009 | 87832-1007 | | 1 | 3 | | | | | | | | | | | | | |
| | 87832-1004 | N.A | N.A | | N.A | 2 | N.A | YES | YES | N.A | YES | | | | | | | 0.10 | 3.60±0.20 |
| | 87832-1260 | 87832-1262 | 87832-5562 | | 1 | 1 | N.A | N.A | YES | YES | YES | 14.65 | 12.85 | 10.00 | N.A | 8.00 | 13.00 | 0.10 | 3.60±0.20 |
| | 87832-1220 | 87832-1222 | 87832-5522 | | 1 | 2 | | | | | | | | | | | | | |
| | 87832-1221 | 87832-1223 | 87832-5523 | | 1 | 3 | | | | | | | | | | | | | |
| | | | 87832-9623 | | 2 | | | | | | | | | | | | | | |
| | 87832-1270 | 87832-1272 | 87832-5572 | | 1 | 4 | | | | | | | | | | | | | |
| 12 | 87832-1224 | 87832-1226 | 87832-1228 | | 1 | 2 | N.A | YES | YES | N.A | N.A | | | | | | | 0.10 | 3.60±0.15 |
| | 87832-1225 | 87832-1227 | 87832-1229 | | 1 | 3 | | | | | | | | | | | | | |
| | 87832-1210 | 87832-1208 | 87832-1206 | | 1 | 2 | N.A | YES | YES | N.A | YES | | | | | | | 0.10 | 3.60±0.20 |
| | 87832-1211 | 87832-1209 | 87832-1207 | | 1 | 3 | | | | | | | | | | | | | |
| | 87832-1204 | N.A | N.A | | N.A | 2 | N.A | YES | YES | N.A | YES | | | | | | | 0.10 | 3.60±0.20 |
| | 87832-1212 | N.A | N.A | | N.A | 2 | N.A | N.A | YES | YES | N.A | | | | | | | | |

PLATING OPTIONS:

1 - 0.05-0.13µm/2-5µin GOLD IN CONTACT AREA AND 1.88µm/75µin MIN. MATTE TIN IN SOLDER TAIL AREA OVER 1.27µm/50µin MIN. NICKEL OVERALL.

2 - 0.38µm/15µin MIN. GOLD IN CONTACT AREA AND 1.88µm/75µin MIN. MATTE TIN IN SOLDER TAIL AREA OVER 1.27µm/50µin MIN. NICKEL OVERALL.

3 - 0.76µm/30µin MIN. GOLD IN CONTACT AREA AND 1.88µm/75µin MIN. MATTE TIN IN SOLDER TAIL AREA OVER 1.27µm/50µin MIN. NICKEL OVERALL.

4 - 2.50µm/100µin MIN. MATTE TIN OVER 1.25µm/50µin MIN. NICKEL OVERALL.

THIS DRAWING CONTAINS INFORMATION THAT IS PROPRIETARY TO MOLEX ELECTRONIC TECHNOLOGIES, LLC AND SHOULD NOT BE USED WITHOUT WRITTEN PERMISSION

FUNCTIONAL SYMBOLS: FA = 0, FC = 0, FP = 0

DIVISIONAL SYMBOLS

DIMENSION UNITS: mm

SCALE: NTS

GENERAL TOLERANCES (UNLESS SPECIFIED)

| | MM | INCH |
|---|---|---|
| 4 PLACES | ± | ± |
| 3 PLACES | ± | ± |
| 2 PLACES | ± 0.200 | ± |
| 1 PLACE | ± | ± |
| 0 PLACES | ± | ± |
| ANGULAR TOL | ± 3° | |

DRAFT WHERE APPLICABLE MUST REMAIN WITHIN DIMENSIONS

CURRENT REV DESC: ADDING NEW PART NUMBER

STATUS: Production
DRWN: Meghraj Boodagatti 2026-06-04
CHK'D: Meghraj Boodagatti 2026-06-10
APPR: Saravanakumar Murugesan 2026-06-10

INITIAL REVISION:
DRWN: GMENARLY 2015-05-22
APPR: KHLIM 2015-09-22

THIRD ANGLE PROJECTION

DRAWING: A3-SIZE

SERIES: 87832

molex

MILLIGRID
2MM PITCH, SMT VERTICAL SHROUDED HEADER

PRODUCT CUSTOMER DRAWING

| DOCUMENT NUMBER | DOC TYPE | DOC PART | REVISION |
|---|---|---|---|
| SD-87832-0001 | PSD | 001 | A25 |

MATERIAL NUMBER:

CUSTOMER: GENERAL MARKET

SHEET NUMBER: 7 OF 13

# 14 TO 50 CIRCUITS

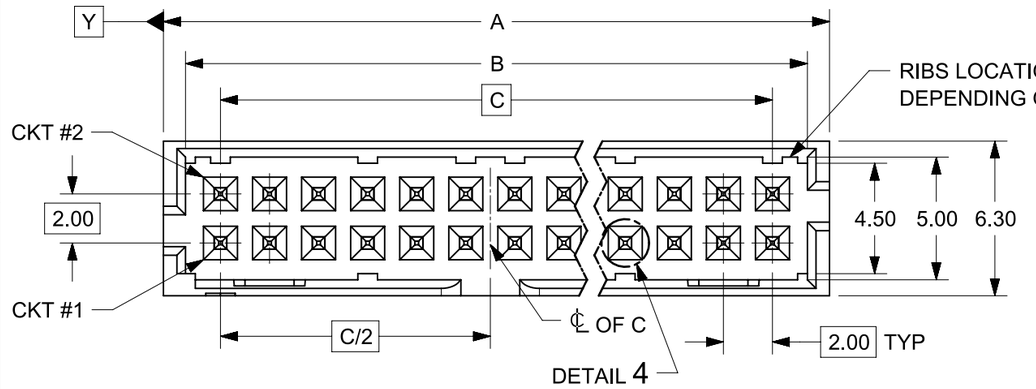


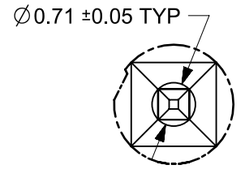


DETAIL 4

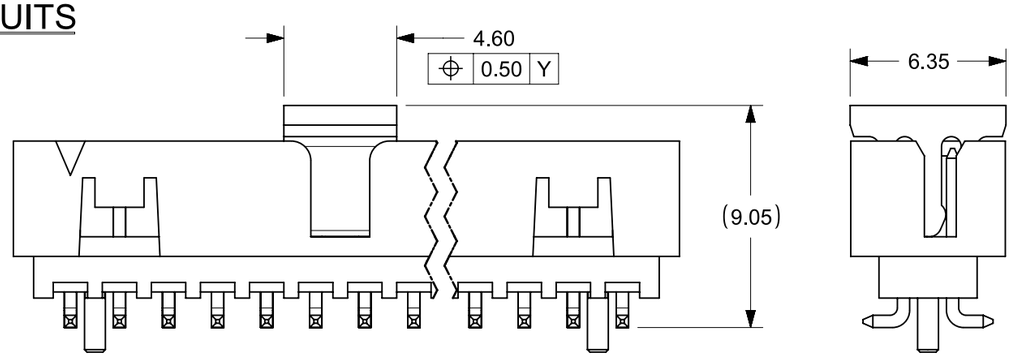


VIEW FOR HEADER WITH CAP

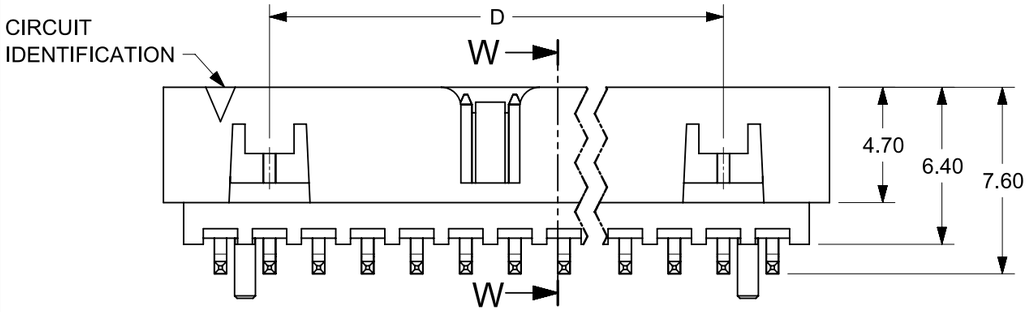


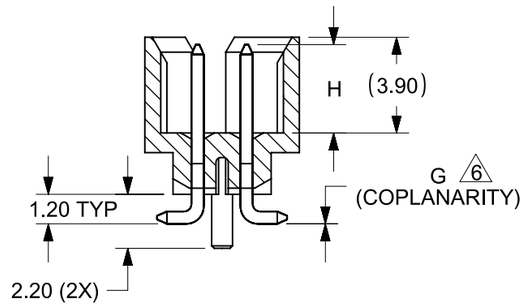


SECTION W-W

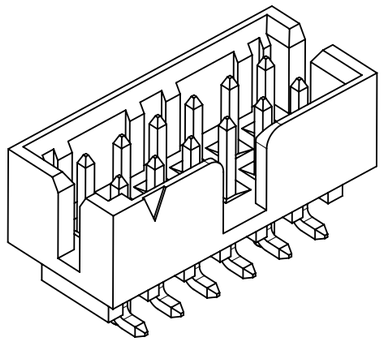

ISO VIEW OF HEADER WITH CENTER
POLARIZATION AND DUAL SIDE SLOTS

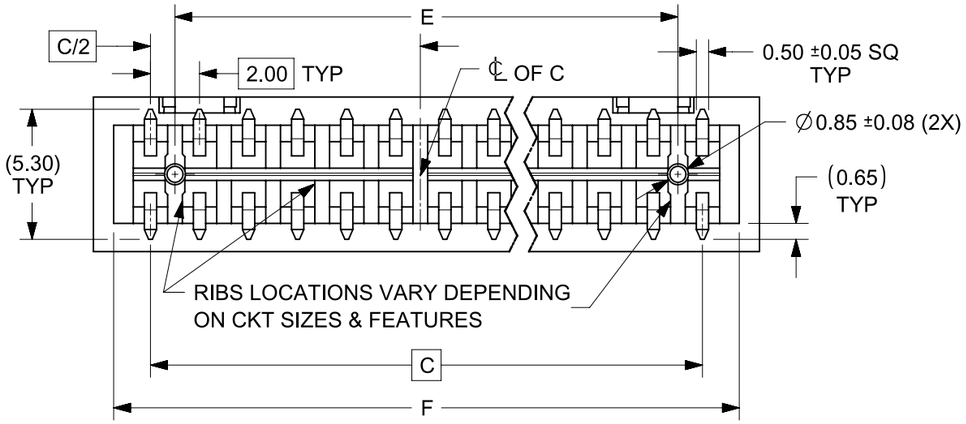


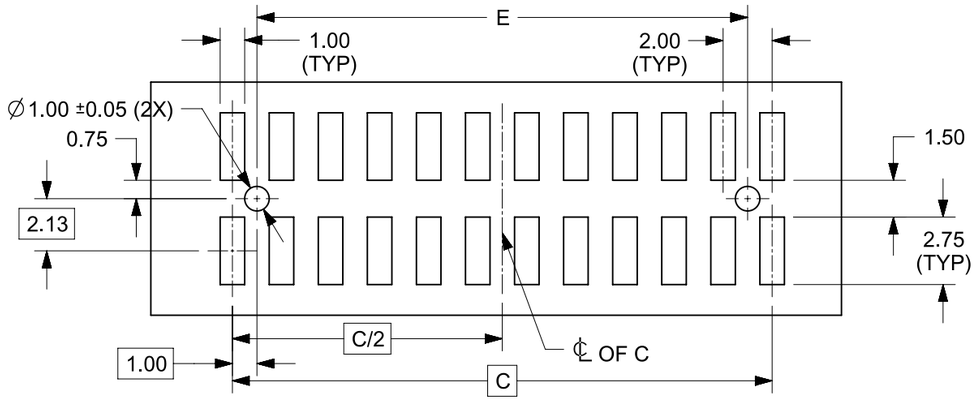


RECOMMENDED PCB LAYOUT

NOTES:
1. MATERIALS:
   HOUSING & CAP: 30% GF, NYLON, UL94V-0, COLOR: BLACK
   PIN: 0.50mm SQ. PHOSPHOR BRONZE
2. FINISHES: REFER TO PLATING OPTIONS
3. PRODUCT SPECIFICATION: PS-87831-027
4. PACKAGING SPECIFICATION: SEE PACKAGING SPECS TABLE ON SHEET 12
5. MATES WITH: A. MOLEX CRIMP RECEPTACLE HOUSING: 51110 SERIES
   AND CRIMP TERMINAL: 50394 SERIES
   B. MOLEX 2mm MILLIGRID DUAL ROW IDT: 87568 SERIES
   C. MOLEX 2mm MILLIGRID DUAL ROW RECEPTACLE:
   79107 (GOLD PLATED), 78787 (TIN PLATED)
6. COPLANARITY IS TO BE MEASURED BY RESTING THE SOLDERTAIL ON
   A GAUGE SURFACE
7. BEND DEPRESSION ON SMT TAIL IS ACCEPTABLE SO LONG AS IT
   DOES NOT AFFECT THE OVERALL COPLANARITY
8. TOP SURFACE OF CAP TO BE FLAT FOR THE PURPOSE OF
   PICK & PLACE BY VACUUM SUCTION NOZZLE

THIS DRAWING CONTAINS INFORMATION THAT IS PROPRIETARY TO MOLEX ELECTRONIC TECHNOLOGIES, LLC AND SHOULD NOT BE USED WITHOUT WRITTEN PERMISSION

FUNCTIONAL SYMBOLS: EA = 0, EC = 0, EP = 0
DIVISIONAL SYMBOLS

| DIMENSION UNITS | SCALE |
|---|---|
| mm | NTS |

GENERAL TOLERANCES (UNLESS SPECIFIED)

| | MM | INCH |
|---|---|---|
| 4 PLACES | ± | ± |
| 3 PLACES | ± | ± |
| 2 PLACES | ± 0.200 | ± |
| 1 PLACE | ± | ± |
| 0 PLACES | ± | ± |
| ANGULAR TOL | ± 3° | |

DRAFT WHERE APPLICABLE MUST REMAIN WITHIN DIMENSIONS

CURRENT REV DESC: ADDING NEW PART NUMBER

STATUS: Production
DRWN: Meghraj Boodagatti 2026-06-04
CHK'D: Meghraj Boodagatti 2026-06-10
APPR: Saravanakumar Murugesan 2026-06-10

INITIAL REVISION:
DRWN: GMENARLY 2015-05-22
APPR: KHLIM 2015-09-22

THIRD ANGLE PROJECTION | DRAWING: A3-SIZE | SERIES: 87832

molex

MILLIGRID
2MM PITCH, SMT VERTICAL SHROUDED HEADER

PRODUCT CUSTOMER DRAWING

| DOCUMENT NUMBER | DOC TYPE | DOC PART | REVISION |
|---|---|---|---|
| SD-87832-0001 | PSD | 001 | A25 |

| MATERIAL NUMBER | CUSTOMER | SHEET NUMBER |
|---|---|---|
| | GENERAL MARKET | 8 OF 13 |

FORMAT: Megha-PCB-prod-A3
REVISION: B
DATE: 2023/10/03

# 14 TO 24 CIRCUITS

| CKT SIZE | ASSY P/N WITHOUT CAP IN TUBE | ASSY P/N WITH CAP IN TUBE | ASSY P/N WITH CAP IN T&R | ASSY P/N WITHOUT CAP IN T&R | T&R OPTIONS (SEE SHEET 12) | PLATING OPTIONS | FRICTION LOCKS DUAL | FRICTION LOCKS CENTER | DUAL SIDE SLOTS | CENTER POLARIZATION | PEGS | DIMENSION A | DIMENSION B | DIMENSION C | DIMENSION D | DIMENSION E | DIMENSION F | DIMENSION G (COPLAN) | DIMENSION H | So (T&R) |
|---|---|---|---|---|---|---|---|---|---|---|---|---|---|---|---|---|---|---|---|---|
| 14 | 87832-1460 | 87832-1462 | 87832-5662 | | 1 | 1 | YES | N.A | YES | YES | YES | 16.65 | 14.85 | 12.00 | 8.00 | 10.00 | 15.00 | 0.15 | 3.60±0.20 | |
| | 87832-1420 | 87832-1422 | 87832-5622 | 87832-5630 | 1 | 2 | | | | | | | | | | | | | | |
| | 87832-1421 | 87832-1423 | 87832-5623 | | 1 | 3 | | | | | | | | | | | | | | |
| | | | 87832-9523 | | 2 | | | | | | | | | | | | | | | |
| | 87832-1470 | 87832-1472 | 87832-5672 | | 1 | 4 | | | | | | | | | | | | | | |
| | 87832-1412 | 87832-1416 | 87832-1414 | | 1 | 2 | YES | N.A | YES | YES | N.A | | | | | | | 0.15 | 3.60±0.20 | |
| 16 | 87832-1660 | 87832-1662 | 87832-5762 | | 1 | 1 | YES | N.A | YES | YES | YES | 18.65 | 16.85 | 14.00 | 10.00 | 12.00 | 17.00 | 0.15 | 3.60±0.20 | |
| | 87832-1620 | 87832-1622 | 87832-5722 | | 1 | 2 | | | | | | | | | | | | | | |
| | 87832-1621 | 87832-1623 | 87832-5723 | | 1 | 3 | | | | | | | | | | | | | | |
| | 87832-1670 | 87832-1672 | 87832-5772 | 87832-5730 | 1 | 4 | | | | | | | | | | | | | | |
| | 87832-1612 | 87832-1616 | 87832-1614 | | 1 | 2 | YES | N.A | YES | YES | N.A | | | | | | | 0.15 | 3.60±0.20 | 28.40 |
| | 87832-1619 | 87832-1645 | 87832-1635 | | 1 | 1 | | | | | | | | | | | | | | |
| 18 | 87832-1860 | 87832-1862 | 87832-5862 | | 1 | 1 | YES | N.A | YES | YES | YES | 20.65 | 18.85 | 16.00 | 12.00 | 14.00 | 19.00 | 0.15 | 3.60±0.20 | |
| | 87832-1820 | 87832-1822 | 87832-5822 | 87832-5830 | 1 | 2 | | | | | | | | | | | | | | |
| | 87832-1821 | 87832-1823 | 87832-5823 | | 1 | 3 | | | | | | | | | | | | | | |
| | 87832-1870 | 87832-1872 | 87832-5872 | | 1 | 4 | | | | | | | | | | | | | | |
| | 87832-1812 | 87832-1816 | 87832-1814 | | 3 | 2 | YES | N.A | YES | YES | N.A | | | | | | | 0.15 | 3.60±0.20 | |
| | 87832-1813 | 87832-1817 | 87832-1815 | | 3 | 3 | YES | N.A | YES | YES | N.A | | | | | | | 0.15 | 3.60±0.20 | |
| 20 | 87832-2060 | 87832-2062 | 87832-5962 | | 1 | 1 | YES | N.A | YES | YES | YES | 22.65 | 20.85 | 18.00 | 14.00 | 16.00 | 21.00 | 0.15 | 3.60±0.20 | |
| | 87832-2020 | 87832-2022 | 87832-5922 | 87832-5930 | 1 | 2 | | | | | | | | | | | | | | |
| | 87832-2021 | 87832-2023 | 87832-5923 | | 1 | 3 | | | | | | | | | | | | | | |
| | 87832-2070 | 87832-2072 | 87832-5972 | | 1 | 4 | | | | | | | | | | | | | | |
| | | | 87832-9672 | | 2 | | | | | | | | | | | | | | | |
| | 87832-2012 | 87832-2016 | 87832-2014 | | 1 | 2 | YES | N.A | YES | YES | N.A | | | | | | | 0.15 | 3.60±0.20 | 40.40 |
| 22 | 87832-2260 | 87832-2262 | 87832-6062 | | 1 | 1 | YES | N.A | YES | YES | YES | 24.65 | 22.85 | 20.00 | 16.00 | 18.00 | 23.00 | 0.15 | 3.60±0.20 | |
| | 87832-2220 | 87832-2222 | 87832-6022 | 87832-6030 | 1 | 2 | | | | | | | | | | | | | | |
| | 87832-2221 | 87832-2223 | 87832-6023 | 87832-6031 | 1 | 3 | | | | | | | | | | | | | | |
| | 87832-2270 | 87832-2272 | 87832-6072 | | 1 | 4 | | | | | | | | | | | | | | |
| 24 | 87832-2460 | 87832-2462 | 87832-6162 | | 1 | 1 | YES | N.A | YES | YES | YES | 26.65 | 24.85 | 22.00 | 18.00 | 20.00 | 25.00 | 0.15 | 3.60±0.20 | |
| | 87832-2420 | 87832-2422 | 87832-6122 | 87832-6130 | 1 | 2 | | | | | | | | | | | | | | |
| | 87832-2421 | 87832-2423 | 87832-6123 | | 1 | 3 | | | | | | | | | | | | | | |
| | 87832-2470 | 87832-2472 | 87832-6172 | | 1 | 4 | | | | | | | | | | | | | | |
| | 87832-2412 | 87832-2416 | 87832-2414 | | 1 | 2 | YES | N.A | YES | YES | N.A | | | | | | | 0.15 | 3.60±0.20 | |

PLATING OPTIONS:

1 - 0.05-0.13µm/2-5µin GOLD IN CONTACT AREA AND 1.88µm/75µin MIN. MATTE TIN IN SOLDER TAIL AREA OVER 1.27µm/50µin MIN. NICKEL OVERALL.

2 - 0.38µm/15µin MIN. GOLD IN CONTACT AREA AND 1.88µm/75µin MIN. MATTE TIN IN SOLDER TAIL AREA OVER 1.27µm/50µin MIN. NICKEL OVERALL.

3 - 0.76µm/30µin MIN. GOLD IN CONTACT AREA AND 1.88µm/75µin MIN. MATTE TIN IN SOLDER TAIL AREA OVER 1.27µm/50µin MIN. NICKEL OVERALL.

4 - 2.50µm/100µin MIN. MATTE TIN OVER 1.25µm/50µin MIN. NICKEL OVERALL.

THIS DRAWING CONTAINS INFORMATION THAT IS PROPRIETARY TO MOLEX ELECTRONIC TECHNOLOGIES, LLC AND SHOULD NOT BE USED WITHOUT WRITTEN PERMISSION

FUNCTIONAL SYMBOLS: EA = 0, EC = 0, EP = 0

DIVISIONAL SYMBOLS

DIMENSION UNITS: mm

SCALE: NTS

GENERAL TOLERANCES (UNLESS SPECIFIED)

| | MM | INCH |
|---|---|---|
| 4 PLACES | ± | ± |
| 3 PLACES | ± | ± |
| 2 PLACES | ± 0.200 | ± |
| 1 PLACE | ± | ± |
| 0 PLACES | ± | ± |
| ANGULAR TOL | ± 3° | |

DRAFT WHERE APPLICABLE MUST REMAIN WITHIN DIMENSIONS

CURRENT REV DESC: ADDING NEW PART NUMBER

STATUS: Production

DRWN: Meghraj Boodagatti 2026-06-04

CHK'D: Meghraj Boodagatti 2026-06-10

APPR: Saravanakumar Murugesan 2026-06-10

INITIAL REVISION:

DRWN: GMENARLY 2015-05-22

APPR: KHLIM 2015-09-22

THIRD ANGLE PROJECTION

DRAWING: A3-SIZE

SERIES: 87832

molex

MILLIGRID
2MM PITCH, SMT VERTICAL SHROUDED HEADER

PRODUCT CUSTOMER DRAWING

| DOCUMENT NUMBER | DOC TYPE | DOC PART | REVISION |
|---|---|---|---|
| SD-87832-0001 | PSD | 001 | A25 |

| MATERIAL NUMBER | CUSTOMER | SHEET NUMBER |
|---|---|---|
| | GENERAL MARKET | 9 OF 13 |

# 26 TO 38 CIRCUITS

| CKT SIZE | ASSY P/N WITHOUT CAP IN TUBE | ASSY P/N WITH CAP IN TUBE | ASSY P/N WITH CAP IN T&R | ASSY P/N WITHOUT CAP IN T&R | T&R OPTIONS (SEE SHEET 12) | PLATING OPTIONS | FRICTION LOCKS DUAL | FRICTION LOCKS CENTER | DUAL SIDE SLOTS | CENTER POLARIZATION | PEGS | DIMENSION A | DIMENSION B | DIMENSION C | DIMENSION D | DIMENSION E | DIMENSION F | DIMENSION G (COPLAN) | DIMENSION H |
|---|---|---|---|---|---|---|---|---|---|---|---|---|---|---|---|---|---|---|---|
| 26 | 87832-2660 | 87832-2662 | 87832-6262 | | 1 | 1 | YES | N.A | YES | YES | YES | 28.65 | 26.85 | 24.00 | 20.00 | 22.00 | 27.00 | 0.15 | 3.60±0.20 |
| | 87832-2620 | 87832-2622 | 87832-6222 | | 1 | 2 | | | | | | | | | | | | | |
| | 87832-2621 | 87832-2623 | 87832-6223 | | 1 | 3 | | | | | | | | | | | | | |
| | 87832-2670 | 87832-2672 | 87832-6272 | | 1 | 4 | | | | | | | | | | | | | |
| | 87832-2612 | 87832-2616 | N.A | | N.A | 2 | YES | N.A | YES | YES | N.A | | | | | | | 0.15 | 3.60±0.20 |
| | 87832-2619 | 87832-2645 | 87832-2635 | | 1 | 1 | | | | | | | | | | | | | |
| 28 | 87832-2860 | 87832-2862 | 87832-6362 | | 1 | 1 | YES | N.A | YES | YES | YES | 30.65 | 28.85 | 26.00 | 22.00 | 24.00 | 29.00 | 0.15 | 3.60±0.20 |
| | 87832-2820 | 87832-2822 | 87832-6322 | | 1 | 2 | | | | | | | | | | | | | |
| | 87832-2821 | 87832-2823 | 87832-6323 | | 1 | 3 | | | | | | | | | | | | | |
| | 87832-2870 | 87832-2872 | 87832-6372 | | 1 | 4 | | | | | | | | | | | | | |
| | N.A | 87832-2816 | N.A | | 1 | 2 | YES | N.A | YES | YES | N.A | | | | | | | | |
| | N.A | 87832-2819 | N.A | | 1 | 1 | | | | | | | | | | | | | |
| 30 | 87832-3060 | 87832-3062 | 87832-6462 | | 1 | 1 | YES | N.A | YES | YES | YES | 32.65 | 30.85 | 28.00 | 24.00 | 26.00 | 31.00 | 0.15 | 3.60±0.20 |
| | 87832-3020 | 87832-3022 | 87832-6422 | | 1 | 2 | | | | | | | | | | | | | |
| | 87832-3021 | 87832-3023 | 87832-6423 | | 1 | 3 | | | | | | | | | | | | | |
| | 87832-3070 | 87832-3072 | 87832-6472 | | 1 | 4 | | | | | | | | | | | | | |
| | 87832-3012 | 87832-3016 | 87832-3014 | | 3 | 2 | YES | N.A | YES | YES | N.A | | | | | | | 0.15 | 3.60±0.20 |
| 32 | 87832-3260 | 87832-3262 | 87832-6562 | | 1 | 1 | YES | N.A | YES | YES | YES | 34.65 | 32.85 | 30.00 | 26.00 | 28.00 | 33.00 | 0.15 | 3.60±0.20 |
| | 87832-3220 | 87832-3222 | 87832-6522 | | 1 | 2 | | | | | | | | | | | | | |
| | 87832-3221 | 87832-3223 | 87832-6523 | | 1 | 3 | | | | | | | | | | | | | |
| | 87832-3270 | 87832-3272 | 87832-6572 | | 1 | 4 | | | | | | | | | | | | | |
| 34 | 87832-3460 | 87832-3462 | 87832-6662 | 87832-6630 | 1 | 1 | YES | N.A | YES | YES | YES | 36.65 | 34.85 | 32.00 | 28.00 | 30.00 | 35.00 | 0.15 | 3.60±0.20 |
| | 87832-3420 | 87832-3422 | 87832-6622 | | 1 | 2 | | | | | | | | | | | | | |
| | 87832-3421 | 87832-3423 | 87832-6623 | | 1 | 3 | | | | | | | | | | | | | |
| | 87832-3470 | 87832-3472 | 87832-6672 | | 1 | 4 | | | | | | | | | | | | | |
| | 87832-3412 | 87832-3416 | 87832-3414 | | 3 | 2 | YES | N.A | YES | YES | N.A | | | | | | | 0.15 | 3.60±0.20 |
| | 87832-3419 | 87832-3445 | 87832-3435 | | 3 | 1 | | | | | | | | | | | | | |
| 36 | 87832-3660 | 87832-3662 | N.A | | N.A | 1 | YES | N.A | YES | YES | YES | 38.65 | 36.85 | 34.00 | 30.00 | 32.00 | 37.00 | 0.15 | 3.60±0.20 |
| | 87832-3620 | 87832-3622 | N.A | | N.A | 2 | | | | | | | | | | | | | |
| | 87832-3621 | 87832-3623 | 87832-3673 | | N.A | 3 | | | | | | | | | | | | | |
| | 87832-3670 | 87832-3672 | N.A | | N.A | 4 | | | | | | | | | | | | | |
| 38 | 87832-3860 | 87832-3862 | N.A | | N.A | 1 | YES | N.A | YES | YES | YES | 40.65 | 38.85 | 36.00 | 32.00 | 34.00 | 39.00 | 0.15 | 3.60±0.20 |
| | 87832-3820 | 87832-3822 | 87832-6822 | | N.A | 2 | | | | | | | | | | | | | |
| | 87832-3821 | 87832-3823 | 87832-3874 | | N.A | 3 | | | | | | | | | | | | | |
| | 87832-3870 | 87832-3872 | N.A | | N.A | 4 | | | | | | | | | | | | | |

PLATING OPTIONS:

1 - 0.05-0.13µm/2-5µin GOLD IN CONTACT AREA AND 1.88µm/75µin MIN. MATTE TIN IN SOLDER TAIL AREA OVER 1.27µm/50µin MIN. NICKEL OVERALL.

2 - 0.38µm/15µin MIN. GOLD IN CONTACT AREA AND 1.88µm/75µin MIN. MATTE TIN IN SOLDER TAIL AREA OVER 1.27µm/50µin MIN. NICKEL OVERALL.

3 - 0.76µm/30µin MIN. GOLD IN CONTACT AREA AND 1.88µm/75µin MIN. MATTE TIN IN SOLDER TAIL AREA OVER 1.27µm/50µin MIN. NICKEL OVERALL.

4 - 2.50µm/100µin MIN. MATTE TIN OVER 1.25µm/50µin MIN. NICKEL OVERALL.

THIS DRAWING CONTAINS INFORMATION THAT IS PROPRIETARY TO MOLEX ELECTRONIC TECHNOLOGIES, LLC AND SHOULD NOT BE USED WITHOUT WRITTEN PERMISSION

FUNCTIONAL SYMBOLS: FA = 0, FC = 0, FP = 0

DIVISIONAL SYMBOLS

DIMENSION UNITS: mm

SCALE: NTS

GENERAL TOLERANCES (UNLESS SPECIFIED)

| | MM | INCH |
|---|---|---|
| 4 PLACES | ± | ± |
| 3 PLACES | ± | ± |
| 2 PLACES | ± 0.200 | ± |
| 1 PLACE | ± | ± |
| 0 PLACES | ± | ± |
| ANGULAR TOL | ± 3° | |

DRAFT WHERE APPLICABLE MUST REMAIN WITHIN DIMENSIONS

CURRENT REV DESC: ADDING NEW PART NUMBER

STATUS: Production

DRWN: Meghraj Boodagatti 2026-06-04

CHK'D: Meghraj Boodagatti 2026-06-10

APPR: Saravanakumar Murugesan 2026-06-10

INITIAL REVISION:

DRWN: GMENARLY 2015-05-22

APPR: KHLIM 2015-09-22

THIRD ANGLE PROJECTION

DRAWING: A3-SIZE

SERIES: 87832

molex

MILLIGRID

2MM PITCH, SMT VERTICAL SHROUDED HEADER

PRODUCT CUSTOMER DRAWING

| DOCUMENT NUMBER | DOC TYPE | DOC PART | REVISION |
|---|---|---|---|
| SD-87832-0001 | PSD | 001 | A25 |

MATERIAL NUMBER

CUSTOMER: GENERAL MARKET

SHEET NUMBER: 10 OF 13

# 40 TO 50 CIRCUITS

| CKT SIZE | ASSY P/N WITHOUT CAP IN TUBE | ASSY P/N WITH CAP IN TUBE | ASSY P/N WITH CAP IN T&R | ASSY P/N WITHOUT CAP IN T&R | VOID PIN LOCATION | T&R OPTIONS (SEE SHEET 12) | PLATING OPTIONS | FRICTION LOCKS DUAL | FRICTION LOCKS CENTER | DUAL SIDE SLOTS | CENTER POLARIZATION | PEGS | DIMENSION A | DIMENSION B | DIMENSION C | DIMENSION D | DIMENSION E | DIMENSION F | DIMENSION G (COPLAN) | DIMENSION H |
|---|---|---|---|---|---|---|---|---|---|---|---|---|---|---|---|---|---|---|---|---|
| 40 | 87832-4060 | 87832-4062 | 87832-6962 | | - | 1 | 1 | YES | N.A | YES | YES | YES | 42.65 | 40.85 | 38.00 | 34.00 | 36.00 | 41.00 | 0.15 | 3.60±0.20 |
| | 87832-4020 | 87832-4022 | 87832-6922 | | - | 1 | 2 | | | | | | | | | | | | | |
| | 87832-4021 | 87832-4023 | 87832-6923 | | - | 1 | 3 | | | | | | | | | | | | | |
| | 87832-4070 | 87832-4072 | 87832-6972 | | - | 1 | 4 | | | | | | | | | | | | | |
| | 87832-4012 | 87832-4016 | N.A | | - | N.A | 2 | YES | N.A | YES | YES | N.A | | | | | | | 0.15 | 3.60±0.20 |
| | | 87832-6925 | | | - | N.A | 3 | | | | | | | | | | | | | |
| 42 | 87832-4260 | 87832-4262 | N.A | | - | N.A | 1 | YES | N.A | YES | YES | YES | 44.65 | 42.85 | 40.00 | 36.00 | 38.00 | 43.00 | 0.15 | 3.60±0.20 |
| | 87832-4220 | 87832-4222 | 87832-4230 | | - | N.A | 2 | | | | | | | | | | | | | |
| | 87832-4221 | 87832-4223 | N.A | | - | N.A | 3 | | | | | | | | | | | | | |
| | 87832-4270 | 87832-4272 | N.A | | - | N.A | 4 | | | | | | | | | | | | | |
| 44 | 87832-4460 | 87832-4462 | 87832-7162 | | - | 1 | 1 | YES | N.A | YES | YES | YES | 46.65 | 44.85 | 42.00 | 38.00 | 40.00 | 45.00 | 0.15 | 3.60±0.20 |
| | 87832-4420 | 87832-4422 | 87832-7122 | | - | 1 | 2 | | | | | | | | | | | | | |
| | 87832-4421 | 87832-4423 | 87832-7123 | | - | 1 | 3 | | | | | | | | | | | | | |
| | 87832-4470 | 87832-4472 | 87832-7172 | | - | 1 | 4 | | | | | | | | | | | | | |
| | 87832-4413 | 87832-4417 | 87832-4415 | | - | 3 | 3 | YES | N.A | YES | YES | N.A | | | | | | | 0.15 | 3.60±0.20 |
| 46 | 87832-4660 | 87832-4662 | 87832-7262 | | - | 1 | 1 | YES | N.A | YES | YES | YES | 48.65 | 46.85 | 44.00 | 40.00 | 42.00 | 47.00 | 0.15 | 3.60±0.20 |
| | 87832-4620 | 87832-4622 | 87832-7222 | 87832-7230 | - | 1 | 2 | | | | | | | | | | | | | |
| | 87832-4621 | 87832-4623 | N.A | | - | N.A | 3 | | | | | | | | | | | | | |
| | 87832-4670 | 87832-4672 | 87832-7272 | | - | 1 | 4 | | | | | | | | | | | | | |
| 48 | 87832-4860 | 87832-4862 | N.A | | - | N.A | 1 | YES | N.A | YES | YES | YES | 50.65 | 48.85 | 46.00 | 42.00 | 44.00 | 49.00 | 0.15 | 3.60±0.20 |
| | 87832-4820 | 87832-4822 | N.A | | - | N.A | 2 | | | | | | | | | | | | | |
| | 87832-4821 | 87832-4823 | N.A | | - | N.A | 3 | | | | | | | | | | | | | |
| | 87832-4870 | 87832-4872 | N.A | | - | N.A | 4 | | | | | | | | | | | | | |
| 50 | 87832-5060 | 87832-5062 | 87832-7462 | | - | 1 | 1 | YES | N.A | YES | YES | YES | 52.65 | 50.85 | 48.00 | 44.00 | 46.00 | 51.00 | 0.15 | 3.60±0.20 |
| | 87832-5020 | 87832-5022 | 87832-7422 | | - | 1 | 2 | | | | | | | | | | | | | |
| | 87832-5021 | 87832-5023 | 87832-7423 | | - | 1 | 3 | | | | | | | | | | | | | |
| | 87832-5070 | 87832-5072 | 87832-7472 | | - | 1 | 4 | | | | | | | | | | | | | |
| | | 87832-5032 | | | 9,10,11,12,17,18,39,40 | 1 | 1 | | | | | | | | | | | | | |
| | | 87832-5033 | | | 18,17,33,34 | 1 | 1 | | | | | | | | | | | | | |
| | 87832-5012 | 87832-5016 | N.A | | - | N.A | 2 | YES | N.A | YES | YES | N.A | | | | | | | 0.15 | 3.60±0.20 |

PLATING OPTIONS:

1 - 0.05-0.13µm/2-5µin GOLD IN CONTACT AREA AND 1.88µm/75µin MIN. MATTE TIN IN SOLDER TAIL AREA OVER 1.27µm/50µin MIN. NICKEL OVERALL.

2 - 0.38µm/15µin MIN. GOLD IN CONTACT AREA AND 1.88µm/75µin MIN. MATTE TIN IN SOLDER TAIL AREA OVER 1.27µm/50µin MIN. NICKEL OVERALL.

3 - 0.76µm/30µin MIN. GOLD IN CONTACT AREA AND 1.88µm/75µin MIN. MATTE TIN IN SOLDER TAIL AREA OVER 1.27µm/50µin MIN. NICKEL OVERALL.

4 - 2.50µm/100µin MIN. MATTE TIN OVER 1.25µm/50µin MIN. NICKEL OVERALL.

THIS DRAWING CONTAINS INFORMATION THAT IS PROPRIETARY TO MOLEX ELECTRONIC TECHNOLOGIES, LLC AND SHOULD NOT BE USED WITHOUT WRITTEN PERMISSION

FUNCTIONAL SYMBOLS: FA = 0, FC = 0, FP = 0

DIVISIONAL SYMBOLS

DIMENSION UNITS: mm

SCALE: NTS

GENERAL TOLERANCES (UNLESS SPECIFIED)

| | MM | INCH |
|---|---|---|
| 4 PLACES | ± | ± |
| 3 PLACES | ± | ± |
| 2 PLACES | ± 0.200 | ± |
| 1 PLACE | ± | ± |
| 0 PLACES | ± | ± |
| ANGULAR TOL | ± 3° | |

DRAFT WHERE APPLICABLE MUST REMAIN WITHIN DIMENSIONS

CURRENT REV DESC: ADDING NEW PART NUMBER

STATUS: Production

DRWN: Meghraj Boodagatti 2026-06-04

CHK'D: Meghraj Boodagatti 2026-06-10

APPR: Saravanakumar Murugesan 2026-06-10

INITIAL REVISION:

DRWN: GMENARLY 2015-05-22

APPR: KHLIM 2015-09-22

THIRD ANGLE PROJECTION

DRAWING: A3-SIZE

SERIES: 87832

molex

MILLIGRID

2MM PITCH, SMT VERTICAL SHROUDED HEADER

PRODUCT CUSTOMER DRAWING

| DOCUMENT NUMBER | DOC TYPE | DOC PART | REVISION |
|---|---|---|---|
| SD-87832-0001 | PSD | 001 | A25 |

| MATERIAL NUMBER | CUSTOMER | SHEET NUMBER |
|---|---|---|
| | GENERAL MARKET | 11 OF 13 |

# PACKAGING OPTIONS

OPTION 1

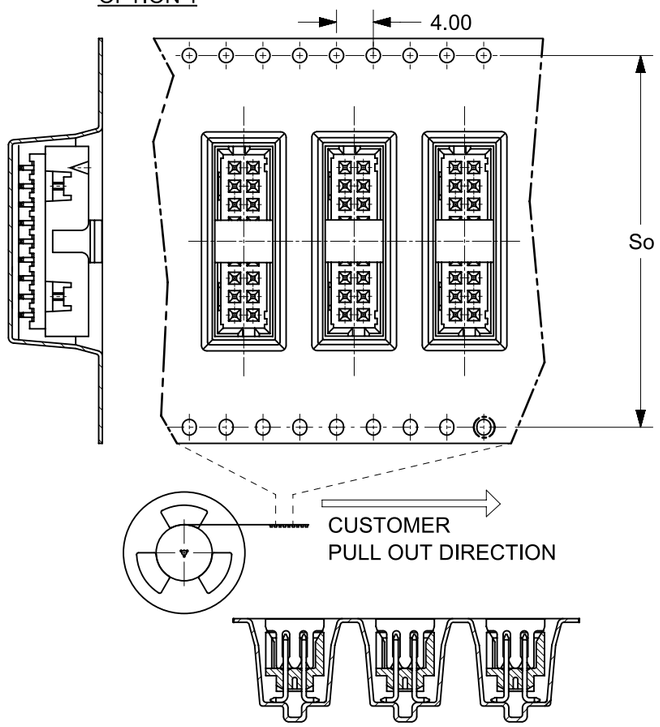


OPTION 2

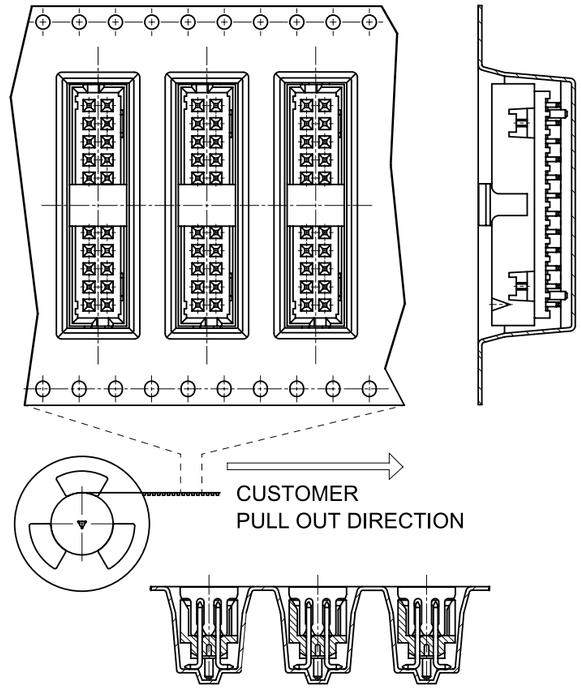


OPTION 3

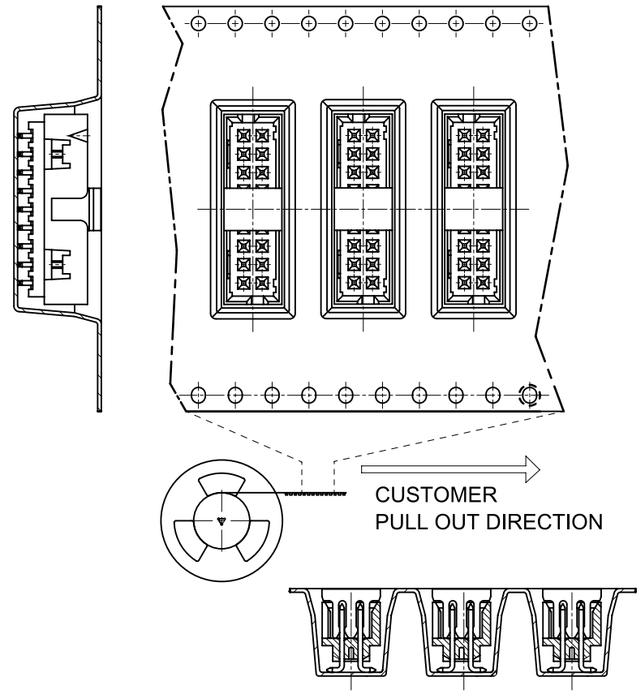


VIEW FOR 1 SIDE PILOT HOLE

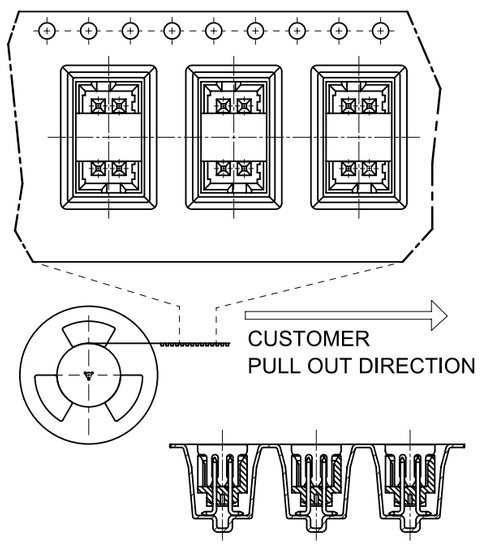


## PACKAGING SPECIFICATION TABLE

| | |
|---|---|
| TAPE AND REEL PACKAGING | PK-87832-300 |
| TUBE STANDARD PACKAGING | PK-87831-001 |
| TUBE NON-STANDARD PACKAGING FOR:<br>87832-0411<br>87832-0824<br>87832-1072<br>87832-1412 | PK-87831-002 |

## EMBOSSED TAPE & REEL POCKET DESCRIPTIONS

| OPTIONS | CENTER POLARIZATION OPTIONS | | PEG OPTIONS | | PILOT HOLE OPTIONS | |
|---|---|---|---|---|---|---|
| | ON THE LEFT | ON THE RIGHT | WITH PEG | WITHOUT PEG | 2 SIDES | 1 SIDE |
| 1 | YES | N.A | YES | N.A | CKT 12-50 | CKT 4-10 |
| 2 | N.A | YES | YES | YES | CKT 12-50 | CKT 4-10 |
| 3 | YES | N.A | N.A | YES | CKT 12-50 | CKT 4-10 |

THIS DRAWING CONTAINS INFORMATION THAT IS PROPRIETARY TO MOLEX ELECTRONIC TECHNOLOGIES, LLC AND SHOULD NOT BE USED WITHOUT WRITTEN PERMISSION

FUNCTIONAL SYMBOLS: EA = 0, EC = 0, ED = 0

DIVISIONAL SYMBOLS

DIMENSION UNITS: mm | SCALE: NTS

GENERAL TOLERANCES (UNLESS SPECIFIED)

| | MM | INCH |
|---|---|---|
| 4 PLACES | ± | ± |
| 3 PLACES | ± | ± |
| 2 PLACES | ± 0.200 | ± |
| 1 PLACE | ± | ± |
| 0 PLACES | ± | ± |
| ANGULAR TOL | ± 3° | |

DRAFT WHERE APPLICABLE MUST REMAIN WITHIN DIMENSIONS

CURRENT REV DESC: ADDING NEW PART NUMBER

STATUS: Production
DRWN: Meghraj Boodagatti 2026-06-04
CHK'D: Meghraj Boodagatti 2026-06-10
APPR: Saravanakumar Murugesan 2026-06-10

INITIAL REVISION:
DRWN: GMENARLY 2015-05-22
APPR: KHLIM 2015-09-22

THIRD ANGLE PROJECTION | DRAWING: A3-SIZE | SERIES: 87832

molex

MILLIGRID
2MM PITCH, SMT VERTICAL SHROUDED HEADER

PRODUCT CUSTOMER DRAWING

| DOCUMENT NUMBER | DOC TYPE | DOC PART | REVISION |
|---|---|---|---|
| SD-87832-0001 | PSD | 001 | A25 |

| MATERIAL NUMBER | CUSTOMER | SHEET NUMBER |
|---|---|---|
| | GENERAL MARKET | 12 OF 13 |

FORMAT: Megha-CC-ib-prod-A3
REVISION: B
DATE: 2023/10/23

## BOARD TO BOARD (BTB) DISTANCE

| HEADER | MATES WITH (RECEPTACLE) | BTB DIST. | PICTORIAL VIEW |
|---|---|---|---|
| 87832 | 79107 | 8.14 | 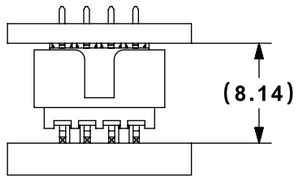  |
| | 78787 | 8.14 | 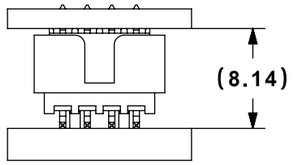  |
| | 79108 | 8.14 | 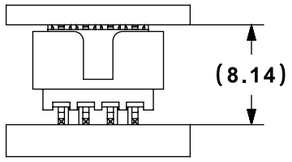  |
| | 79109 | 8.35 | 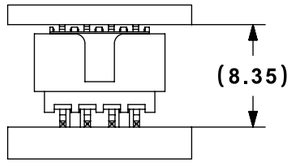  |
| | 78788 | 8.35 | 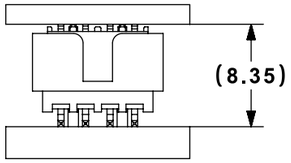  |

THIS DRAWING CONTAINS INFORMATION THAT IS PROPRIETARY TO MOLEX ELECTRONIC TECHNOLOGIES, LLC AND SHOULD NOT BE USED WITHOUT WRITTEN PERMISSION

FUNCTIONAL SYMBOLS: EA = 0, EC = 0, EP = 0

DIVISIONAL SYMBOLS

DIMENSION UNITS: mm
SCALE: NTS

GENERAL TOLERANCES (UNLESS SPECIFIED)

| | MM | INCH |
|---|---|---|
| 4 PLACES | ± | ± |
| 3 PLACES | ± | ± |
| 2 PLACES | ± 0.200 | ± |
| 1 PLACE | ± | ± |
| 0 PLACES | ± | ± |
| ANGULAR TOL | ± 3° | |

DRAFT WHERE APPLICABLE MUST REMAIN WITHIN DIMENSIONS

CURRENT REV DESC: ADDING NEW PART NUMBER

STATUS: Production
DRWN: Meghraj Boodagatti 2026-06-04
CHK'D: Meghraj Boodagatti 2026-06-10
APPR: Saravanakumar Murugesan 2026-06-10

INITIAL REVISION:
DRWN: DRWN BY XXXX/XX/XX
APPR: APPR BY XXXX/XX/XX

THIRD ANGLE PROJECTION | DRAWING: A3-SIZE | SERIES: 87832

molex

MILLIGRID
2MM PITCH, SMT VERTICAL SHROUDED HEADER

PRODUCT CUSTOMER DRAWING

| DOCUMENT NUMBER | DOC TYPE | DOC PART | REVISION |
|---|---|---|---|
| SD-87832-0001 | PSD | 001 | A25 |

| MATERIAL NUMBER | CUSTOMER | SHEET NUMBER |
|---|---|---|
| | GENERAL MARKET | 13 OF 13 |