© TE Connectivity. All Rights Reserved.

| REVISIONS | | | | | |
|---|---|---|---|---|---|
| P | LTR | DESCRIPTION | DATE | DWN | APVD |
| | P | REVISED PER ECR-25-253035 | 07OCT2025 | CKN | JP |

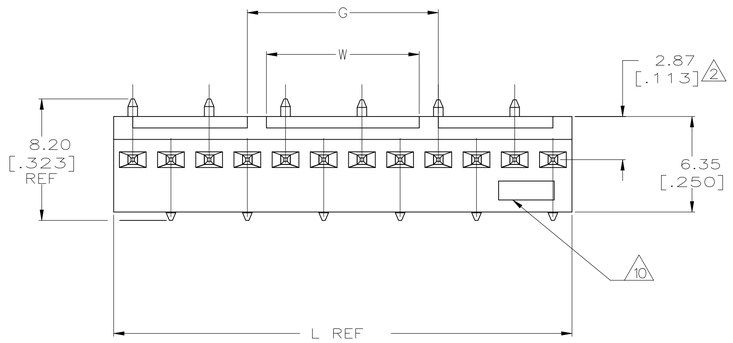


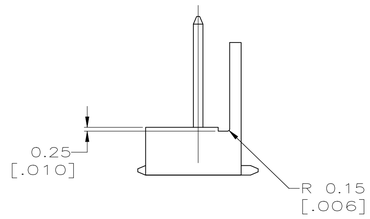


TYPICAL END VIEW
FOR 2 CIRCUIT ONLY

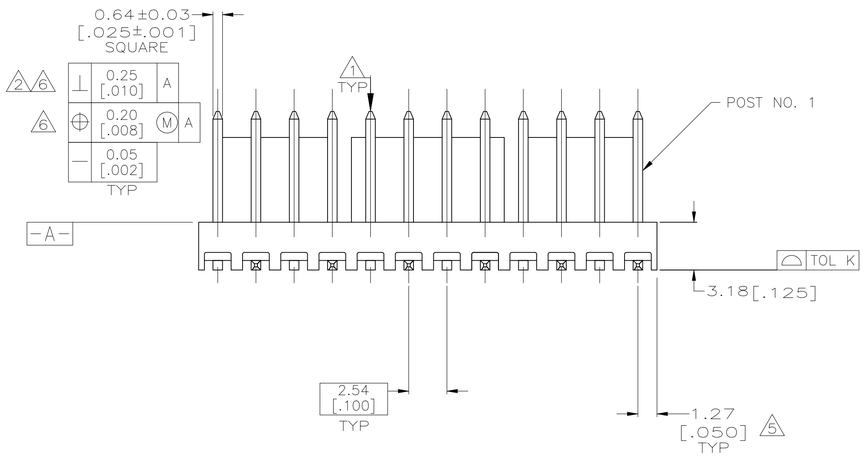


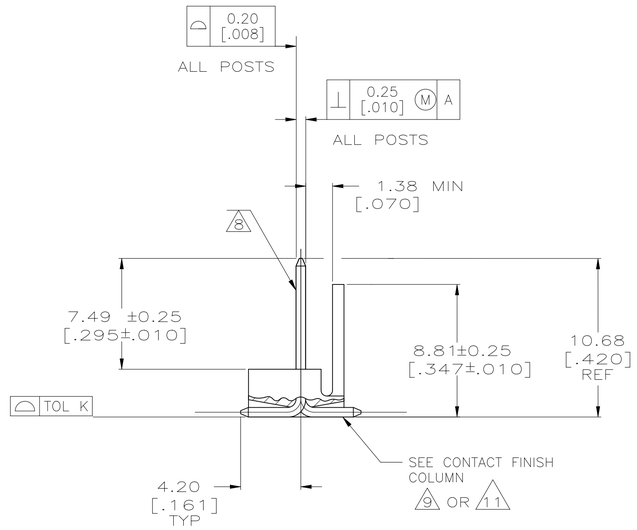


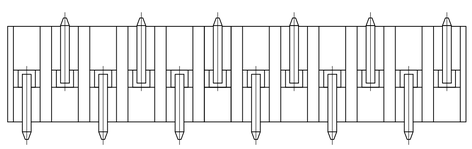

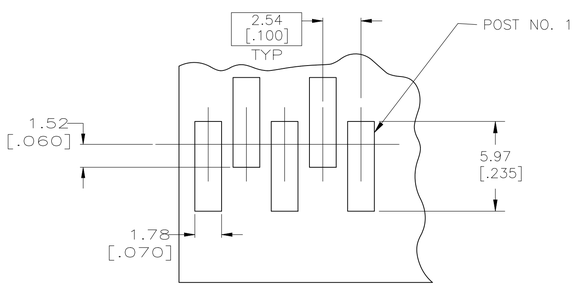


RECOMMENDED P.C. BOARD LAYOUT
FOR USE WITH 0.25 [.010] THICK STENCIL

1. POST TO WITHSTAND 13 NEWTONS (3 LBS) MIN. AXIAL FORCE. IN DIRECTION SHOWN WITHOUT DISLODGING.
2. MEASURED AT SURFACE -A-
3. PARTS COMPLY WITH AMP SOLDERABILITY SPEC. NO. 109-11-2.
4. MATERIAL:
   HOUSING: NYLON, 4/6, HIGH TEMP, BLACK.
   POST: COPPER ALLOY, (SEE NOTES 8, 9 & 13 FOR PLATING).
5. COORDINATE DIMENSION APPLIES FROM CENTER OF ACTUAL FEATURE.
6. POSTS TO BE MEASURED WHEN STRIP IS HELD FLAT.
7. DIMENSIONS IN BRACKETS ARE IN INCHES.
8. PLATING: GOLD PLATE AREA, 0.00076 [.000030] GOLD OR 0.00008 [.000003] MIN GOLD FLASH OVER 0.00068 [.000027] PALLADIUM NICKEL, ONLY IN FUNCTIONAL AREA AND REST WITH OPTIMIZED THICKNESS PER TE CONNECTIVITY'S DISCRETION, ALL SIDES, OVER NICKEL UNDERPLATE, 0.00127 [.000050] MIN, ALL SIDES AND ENTIRE LENGTH OF POST.
9. BRIGHT TIN/LEAD (93/7) PLATE AREA, 0.00381-0.00889 [.000150-.000350] THICK, ALL FOUR SIDES, 3.56[.140] MIN.
10. TE LOGO AND UL AND CSA TRADEMARKS TO APPEAR ON THIS SURFACE.
11. MATTE TIN PLATE AREA, 0.00381-0.00889[.000150-.000350] THICK, ALL FOUR SIDES, 3.56[.140] MIN.
12. ALL FOUR SIDES, 3.56[.140] MIN. OBSOLETE PARTS: OBSOLETE CIS STREAMLINING PER D.RENAUD/D.SINISI

| | POST FINISH | MM | [IN] | MM | [IN] | MM | [IN] | MM | [IN] | NO OF POSITIONS | PART NUMBER |
|---|---|---|---|---|---|---|---|---|---|---|---|
| | | TOL K | | W | | G | | L | | | |
| | 8 11 | 0.15 | .006 | 10.16 | .400 | 12.70 | .500 | 30.48 | 1.200 | 12 | 4-647108-2 |
| | | 0.15 | .006 | – | – | 10.16 | .400 | 27.94 | 1.100 | 11 | 4-647108-1 |
| | | 0.15 | .006 | – | – | 7.62 | .300 | 25.40 | 1.000 | 10 | 4-647108-0 |
| | | 0.15 | .006 | – | – | 5.08 | .200 | 22.86 | .900 | 9 | 3-647108-9 |
| | | 0.15 | .006 | – | – | 2.54 | .100 | 20.32 | .800 | 8 | 3-647108-8 |
| | | 0.15 | .006 | – | – | – | – | 17.78 | .700 | 7 | 3-647108-7 |
| | | 0.15 | .006 | – | – | – | – | 15.24 | .600 | 6 | 3-647108-6 |
| | | 0.15 | .006 | – | – | – | – | 12.70 | .500 | 5 | 3-647108-5 |
| | | 0.15 | .006 | – | – | – | – | 10.16 | .400 | 4 | 3-647108-4 |
| | | 0.15 | .006 | – | – | – | – | 7.62 | .300 | 3 | 3-647108-3 |
| | | 0.15 | .006 | – | – | – | – | 5.08 | .200 | 2 | 3-647108-2 |
| 12 SUPERSEDED | 8 9 | 0.15 | .006 | 10.16 | .400 | 12.70 | .500 | 30.48 | 1.200 | 12 | 1-647108-2 |
| | | 0.15 | .006 | – | – | 10.16 | .400 | 27.94 | 1.100 | 11 | 1-647108-1 |
| | | 0.15 | .006 | – | – | 7.62 | .300 | 25.40 | 1.000 | 10 | 1-647108-0 |
| | | 0.15 | .006 | – | – | 5.08 | .200 | 22.86 | .900 | 9 | 647108-9 |
| | | 0.15 | .006 | – | – | 2.54 | .100 | 20.32 | .800 | 8 | 647108-8 |
| | | 0.15 | .006 | – | – | – | – | 17.78 | .700 | 7 | 647108-7 |
| | | 0.15 | .006 | – | – | – | – | 15.24 | .600 | 6 | 647108-6 |
| | | 0.15 | .006 | – | – | – | – | 12.70 | .500 | 5 | 647108-5 |
| | | 0.15 | .006 | – | – | – | – | 10.16 | .400 | 4 | 647108-4 |
| | | 0.15 | .006 | – | – | – | – | 7.62 | .300 | 3 | 647108-3 |
| | | 0.15 | .006 | – | – | – | – | 5.08 | .200 | 2 | 647108-2 |

THIS DRAWING IS A CONTROLLED DOCUMENT.

DIMENSIONS: mm [INCHES]

TOLERANCES UNLESS OTHERWISE SPECIFIED:
0 PLC ±
1 PLC ±
2 PLC ±
3 PLC ± 0.38 [.015]
4 PLC ±
ANGLES ± 0°30'

MATERIAL 4 | FINISH 4

| | | |
|---|---|---|
| DWN | S. HOOVER | 25-FEB-2003 |
| CHK | D. BOSSI | 25-FEB-2003 |
| APVD | D. BOSSI | 25-FEB-2003 |

PRODUCT SPEC

APPLICATION SPEC

WEIGHT 0.000000

TE Connectivity

NAME: MTA-.100 HEADER ASSEMBLY,SURFACE MOUNT, POLARIZED, STRAIGHT .025 SQUARE POST, POST, .000030 GOLD

| SIZE | CAGE CODE | DRAWING NO | RESTRICTED TO |
|---|---|---|---|
| A1 | 00779 | C-647108 | |

CUSTOMER DRAWING | SCALE 5:1 | SHEET 1 OF 1 | REV P

4805 (1/15)