THIS DRAWING IS UNPUBLISHED. RELEASED FOR PUBLICATION 20
© COPYRIGHT 20 BY - ALL RIGHTS RESERVED.

LOC	DIST
CM	00

REVISIONS

P	LTR	DESCRIPTION	DATE	DWN	APVD
	P1	REVISED PER ECR-18-004355	18JUN2018	BDA	SG
	R	REVISED PER ECR-19-015071	16OCT2019	BDA	SW
	S	REVISED PER ECN-25-253035	08OCT2025	CKN	JP

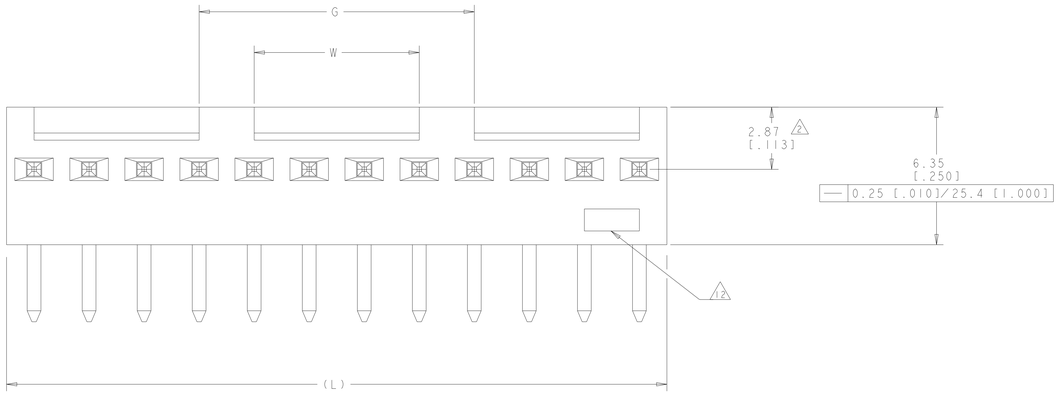

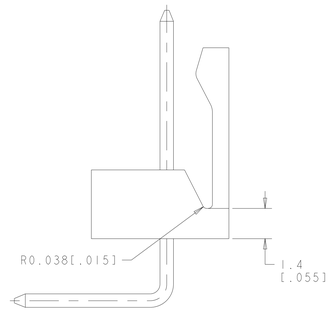

TYPICAL END VIEW
FOR 4 THROUGH 7 POSITION

1. POST WITHSTAND 13 NEWTONS (3 LBS) MIN AXIAL FORCE IN DIRECTION SHOWN WITHOUT DISLODGING.
2. MEASURED AT -A-.
3. PARTS COMPLY WITH SOLDERABILITY SPEC 109-11-2.
4. MATERIAL:
   HOUSING: NYLON, 4/6, HIGH TEMP, BLACK.
   POST - COPPER ALLOY (SEE TABLE FOR PLATING).
5. COORDINATE DIMENSION APPLIES FROM CENTER OF ACTUAL FEATURE.
6. POSTS TO BE MEASURED WHEN STRIP HELD FLAT.
7. DIMENSIONS IN BRACKETS ARE IN INCHES.
8. PLATING: GOLD PLATE AREA, 0.00076 [.000030] GOLD OR 0.00008 [.000003] MIN GOLD FLASH OVER 0.00068 [.000027] PALLADIUM NICKEL, ONLY IN FUNCTIONAL CONTACT AREA AND OTHER AREAS WITH OPTIMIZED THICKNESS PER TE CONNECTIVITY'S DISCRETION, ALL SIDES, OVER NICKEL UNDERPLATE, 0.00127 [.000050] MIN, ALL SIDES AND ENTIRE LENGTH OF POST.
9. BRIGHT TIN/LEAD (93/7) PLATE AREA,0.00381-0.00889 [.000150-.000350] THICK, ALL FOUR SIDES, 3.56[.140] MIN.
10. TOLERANCES APPLY TO SOLDER SIDE OF BOARD.
11. ONE HOLE MAY BE UNDERSIZED 0.81-0.90 [.032-.035] DIAMETER FOR ASSEMBLY RETENTION DURING PROCESSING.
12. TE LOGO,UL,AND CSA TRADEMARKS TO APPEAR ON THIS SURFACE.
13. MATTE TIN PLATE AREA,0.00381-0.00889 [.000150-.000350] THICK, ALL FOUR SIDES, 3.56[.140] MIN.
14. OBSOLETE PARTS: OBSOLETE CIS STREAMLINING PER D.RENAUD/D.SINISI

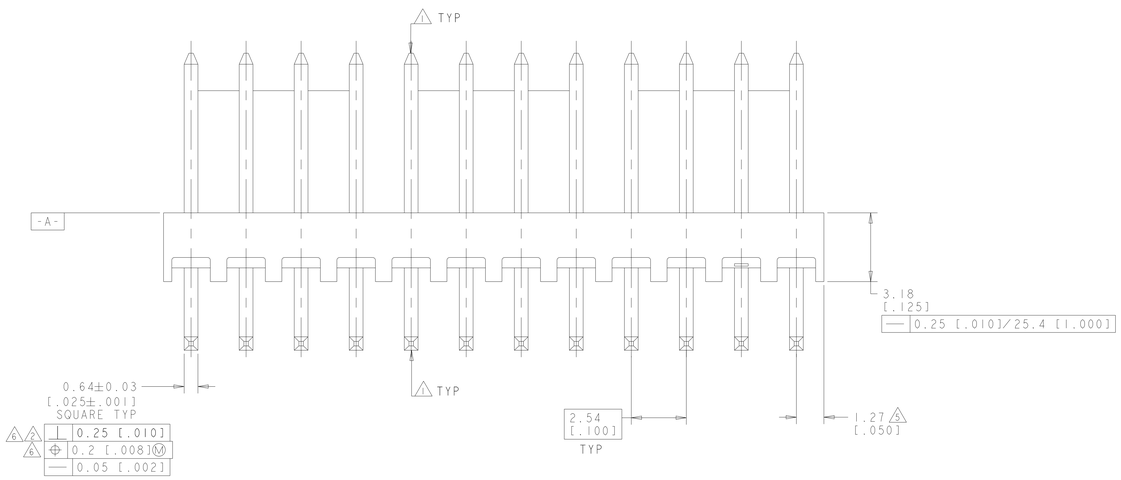

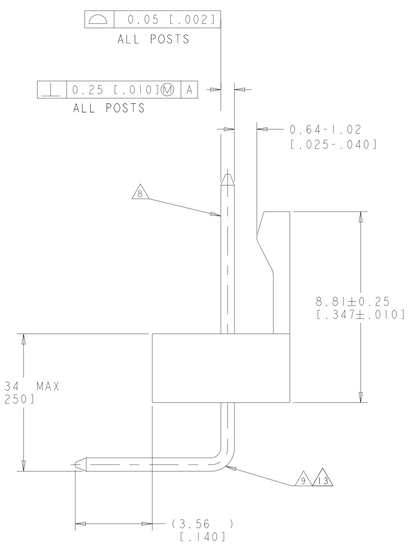

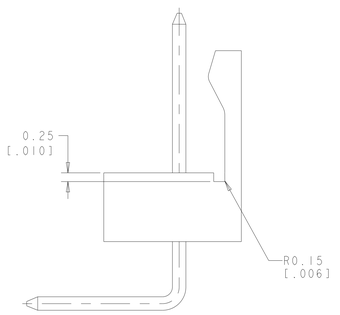

TYPICAL END VIEW
FOR 2 POSITION ONLY

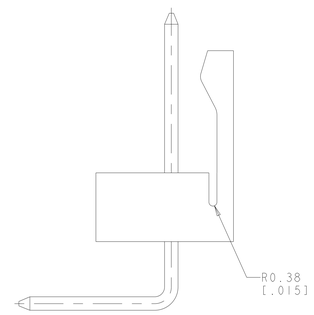

TYPICAL END VIEW
FOR 3 POSITION ONLY

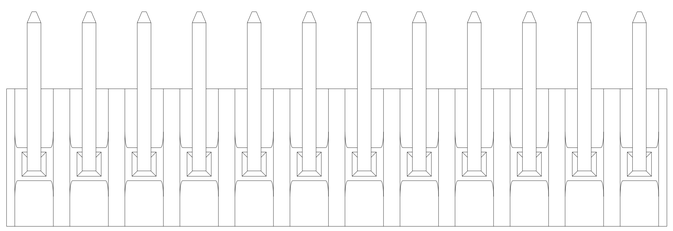

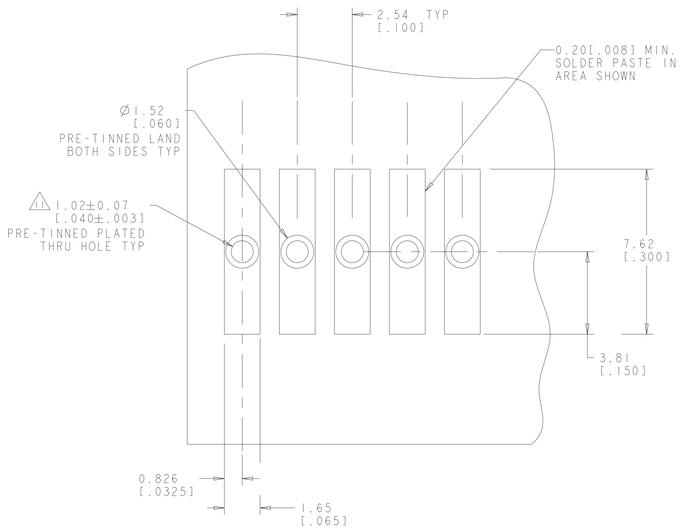

RECOMMENDED MOUNTING HOLE PATTERN 10
FOR 1.57±0.20[.062±.008] THICK P.C. BOARD

	POST FINISH	W	G	L	NO OF POSN	PART NO
	6 13	7.62 [.300]	12.70 [.500]	30.48 [1.200]	12	4-647117-2
		-	10.16 [.400]	27.94 [1.100]	11	4-647117-1
		-	7.62 [.300]	25.40 [1.000]	10	4-647117-0
		-	5.08 [.200]	22.86 [.900]	9	3-647117-9
		-	2.54 [.100]	20.32 [.800]	8	3-647117-8
		-	-	17.78 [.700]	7	3-647117-7
		-	-	15.24 [.600]	6	3-647117-6
		-	-	12.70 [.500]	5	3-647117-5
		-	-	10.16 [.400]	4	3-647117-4
		-	-	7.62 [.300]	3	3-647117-3
		-	-	5.08 [.200]	2	3-647117-2
14 SUP 4-647117-2	8 9	7.62 [.300]	12.70 [.500]	30.48 [1.200]	12	1-647117-2
14 SUP 4-647117-1		-	10.16 [.400]	27.94 [1.100]	11	1-647117-1
14 SUP 4-647117-0		-	7.62 [.300]	25.40 [1.000]	10	1-647117-0
14 SUP 3-647117-9		-	5.08 [.200]	22.86 [.900]	9	647117-9
14 SUP 3-647117-8		-	2.54 [.100]	20.32 [.800]	8	647117-8
14 SUP 3-647117-7		-	-	17.78 [.700]	7	647117-7
14 SUP 3-647117-6		-	-	15.24 [.600]	6	647117-6
14 SUP 3-647117-5		-	-	12.70 [.500]	5	647117-5
14 SUP 3-647117-4		-	-	10.16 [.400]	4	647117-4
14 SUP 3-647117-3		-	-	7.62 [.300]	3	647117-3
14 SUP 3-647117-2		-	-	5.08 [.200]	2	647117-2

THIS DRAWING IS A CONTROLLED DOCUMENT.

DIMENSIONS: mm[INCHES]

TOLERANCES UNLESS OTHERWISE SPECIFIED:
0 PLC ±-
1 PLC ±0.
2 PLC ±0.38[.015]
3 PLC ±-
4 PLC ±-
ANGLES ±0°30'
FINISH -

MATERIAL 4

DWN R. WHITAKER 13-NOV-2001
CHK D. BOSSI 13-NOV-2001
APVD D. BOSSI 13-NOV-2001
PRODUCT SPEC -
APPLICATION SPEC -
WEIGHT -

TE Connectivity

NAME MTA-100 HEADER ASSY,HIGH TEMP, FRICTION LOCK, .025 SQ,RIGHT ANGLE, FRONT BEND POST, .000030 GOLD

SIZE A0 | CAGE CODE 00779 | DRAWING NO C-647117 | RESTRICTED TO

CUSTOMER DRAWING

SCALE 10:1 | SHEET 1 OF 1 | REV S

4806 (3/11)