REVISIONS			
REV	DESCRIPTION	DATE	APPROVED
01 0	RELEASED	3/24/97	S. Morby

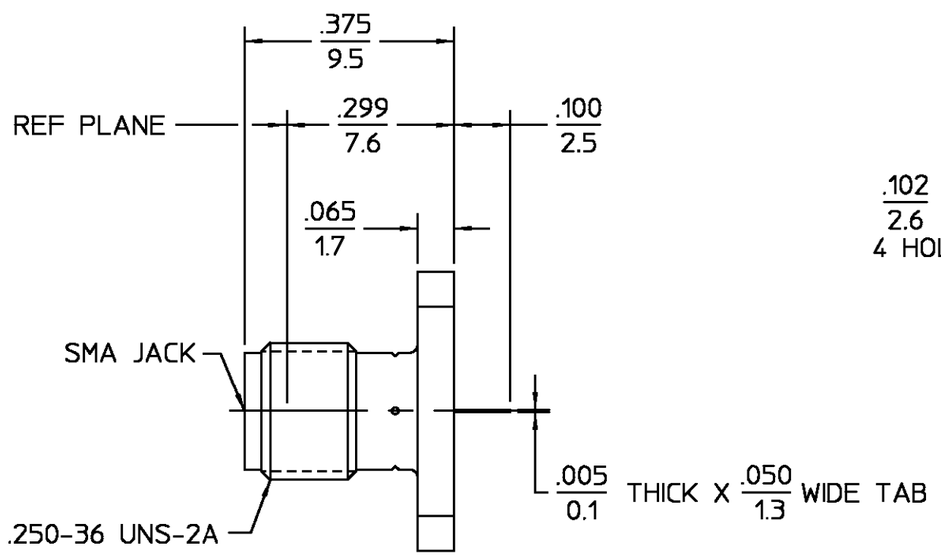

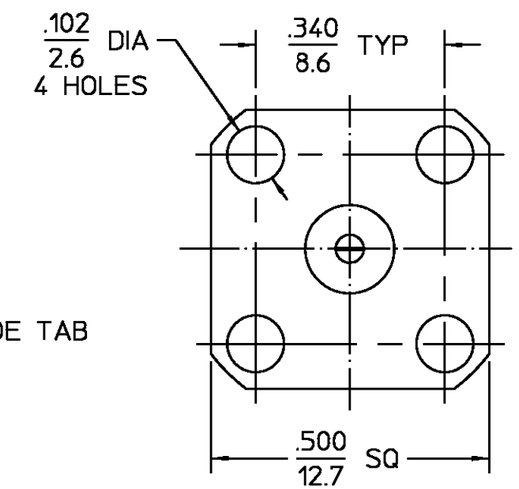

NOTES:
1. CAPTURED CENTER CONTACT

ELECTRICAL	MECHANICAL	ENVIRONMENTAL
Nominal Impedance (Ohms) 50	Interface Dimensions MIL-STD-348A, Fig. 310.2	Temperature Rating -65°C to +125°C
Frequency Range (GHz) DC to 6	Recommended Mating Torque 3-5 in-lbs (0.34-0.57 Nm)	Vibration MIL-STD-202, Method 204, Condition D
Volt Rating (VRMS MAX) @ Sea Level 335	Mating Characteristics:	Shock MIL-STD-202, Method 213, Condition I
VSWR 1.40:1	Insertion (MAX Lbs) 3.0 (1.36 Kg)	Thermal Shock MIL-STD-202, Method 107, Condition A
Insertion Loss (dB MAX) $.07\sqrt{f(GHz)}$	Withdrawal (MIN Oz) 1.0 (28.35 g)	Moisture Resistance MIL-STD-202, Method 106, except steb 7b is omitted. No measurement at high humidity. Insulation resistance shall be at least 200 Megohms within 5 minutes after removal from humidity.
RF Leakage (dB MIN) -90 @ 2 to 3 GHz	Force to Engage and Disengage (in-Lbs MAX) 2.0 (0.23 Nm)	
Corona, 70,000 Ft (VRMS MIN) 250	Center Contact Captivation	
Dielectric Withstanding Voltage (VRMS MIN) @ Sea Level 1000	Axial (Lbs) 6.0 (2.7 Kg) MIN FROM INTERFACE	
Contact Resistance (Milliohms MAX)	Axial (Lbs) 4.0 (1.8 Kg) MIN FROM FLANGE	
Center Contact 3.0	Radial (in-Oz) 4.0 (0.028 Nm)	
Outer Contact 2.0		
Cable to Housing N/A		
RF High Potential @ Sea Level (VRMS MIN @ 5 MHz) 670		
I.R.(Megohms MIN) 5,000	Weight (Grams) TBD	

.XXX = in
XX.X = mm (REF)

COMPONENT	MATERIAL	FINISH
HOUSING	BRASS, PER ASTM-B-16 HALF HARD OR CZ121 PER BS2874	GOLD PLATE
DIELECTRIC	TFE FLUOROCARBON PER ASTM-D-1457	N/A
CENTER CONTACT	BERYLLIUM COPPER PER ASTM-B-196 OR ASTM-B-197 ALLOY C17300, CONDITION H	GOLD PLATE

UNLESS OTHERWISE SPECIFIED DIMENSIONS ARE IN INCHES
TOLERANCE ON
FRAC. ±1/64 DEC. ±.005 ANGLES ± 1°

DRAWN BY S. Morby DATE 01/30/97
CHECKED BY
APP'D BY

AMP

AMP Incorporated
140 Fourth Avenue
Waltham, MA 02451-7599

These drawings and specifications are the property of M/A-COM Interconnect Division and shall not be reproduced or copied or used in whole or in part as the basis for the manufacture or sale of item(s) without written permission.

USE ASS'Y PROCEDURE

NO. A.P. N/A

TITLE SMA.COM
4 HOLE FLANGE MOUNT JACK
RECEPTACLE, TAB TERMINAL

SIZE	CODE IDENT NO.		REV
B	26805	2252-1818-09	01 0
SCALE 4 : 1			SHEET 1 OF 1

CUSTOMER DRAWING

AMP PART # 1222731-1
SHEET 1 OF 1 REV A