THIS DRAWING IS UNPUBLISHED. RELEASED FOR PUBLICATION -,- .
© COPYRIGHT - BY TYCO ELECTRONICS CORPORATION. ALL RIGHTS RESERVED.

LOC	DIST
AJ	00

REVISIONS

P	LTR	DESCRIPTION	DATE	DWN	APVD
	G2	REV PER ECO 06-029805	2/6/2007	DW	JL

1. USE WITH HAND TOOL 220190-1
2. CABLE USED WITHOUT SPACER.
3. CABLE USED WITH SPACER.
4. BULK PACKAGE
5. SEE I.S. SHEET 9778

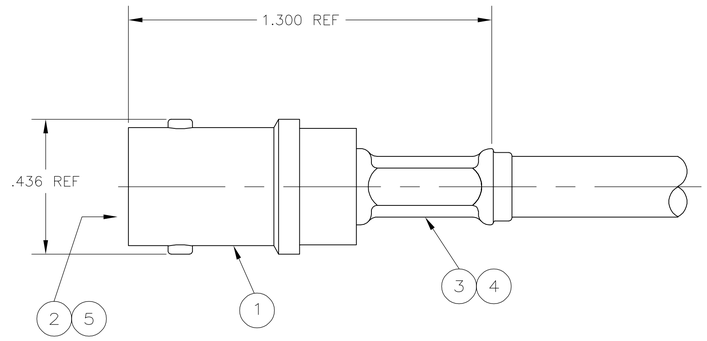

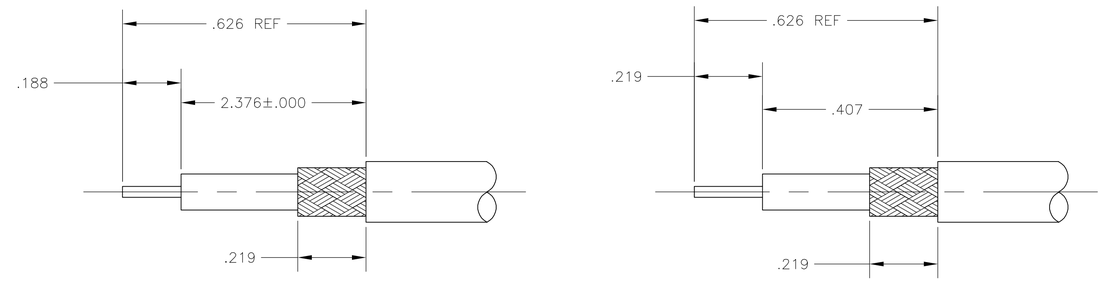

VIEW A VIEW B

RECOMMENDED STRIP LENGTH

OBSOLETE	BELDEN 89907, 9907 & RG-141	A	.068	.213	58465-3	–	–	9-221132-0	2-413774-5	413780-1	9-413779-1
OBSOLETE	RG-174/U, 188/U & 316/U	B	.068	.178	58465-3	–	21427-2	9-413658-0	1-413774-5	413780-3	9-413779-0
OBSOLETE	BELDEN 89907, 9907 & RG-141	A	.068	.213	58465-3	–	–	9-221132-0	2-413774-5	413780-1	413779-6
OBSOLETE	RG-180 & RG-195	A	.068	.178	58465-3	–	–	9-413658-1	2-413774-0	413780-3	413779-5
OBSOLETE	RG-179U, 179A/U, 179B/U, 187/U &187A/U	A	.068	.178	58465-3	–	21427-2	9-413658-0	2-413774-0	413780-3	413779-4
3	RG-174/U, 188/U & 316/U	B	.068	.178	58465-3	–	21427-2	9-413658-0	1-413774-5	413780-3	413779-3
OBSOLETE 2	RG-59/U, 59A/U, 59B/U, 62/U, 62A/U, 62B/U & BELDEN 88241	A	.068	.255	58465-1	227423-1	–	9-221132-1	1-413774-0	413780-2	413779-2
OBSOLETE	RG-58/U, 58A/U, 58B/U, 58C/U & BELDEN 88240	A	.068	.213	58465-1	–	–	9-221132-0	413774-5	413780-1	413779-1
	FOR USE WITH CABLE	VIEW	CONTACT CRIMP (HEX)	FERRULE CRIMP	DIE SET 1	5 SPACER QTY=1	4 TUBING QTY=1	3 FERRULE QTY=1	2 CONTACT QTY=1	1 JACK ASSEMBLY QTY=1	PART NUMBER

THIS DRAWING IS A CONTROLLED DOCUMENT.

DIMENSIONS: INCHES

TOLERANCES UNLESS OTHERWISE SPECIFIED:
0 PLC ± –
1 PLC ± –
2 PLC ± –
3 PLC ± –
4 PLC ± –
ANGLES ± –

MATERIAL

FINISH –

DWN J. L. GROFT 06/18/90
CHK S. J. MAGARO 7-2-90
APVD M. PHILLIPS 7-3-90
PRODUCT SPEC —
APPLICATION SPEC —
WEIGHT —

tyco Electronics
Tyco Electronics Corporation
Harrisburg, PA 17105-3608

NAME JACK, HEX CRIMP, COMMERCIAL BNC

SIZE	CAGE CODE	DRAWING NO	RESTRICTED TO
A1	00779	C-413779	—

CUSTOMER DRAWING SCALE 4:1 SHEET 1 OF 1 REV G2