PRODUCT NUMBER

10118084-YXX-XXLF

PLATING:
(AS AVAILABLE)
1=0.76µm GXT/GOLD ON CONTACT
2µm TIN MIN ON TAILS

4=2µm TIN MIN FULL PLATED

8=0.38µm GXT/GOLD ON CONTACT
2µm TIN MIN ON TAILS

PIN STYLE, SEE TABLE
(AS AVAILABLE)

RoHS COMPATIBLE
SEE NOTE 4

TOTAL Nb OF POSITIONS
04 TO 30

PACKAGING OR OPTION
SEE NOTE 3
(MAY BE SUBJECT TO TOOLING FEES)

STYLE	DIM"A"±0.2
01	5.84
02	8.08
03	3.20
04	8.80
05	4.80

EXTENDED RANGE

- TOOLING FEASIBILITY CONFIRMED
- SAMPLES ON DEMAND
- AVAILABILITY ON DEMAND

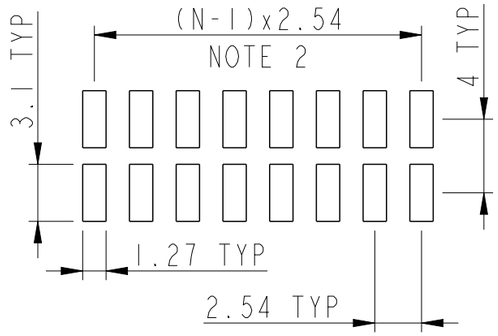

PCB LAYOUT

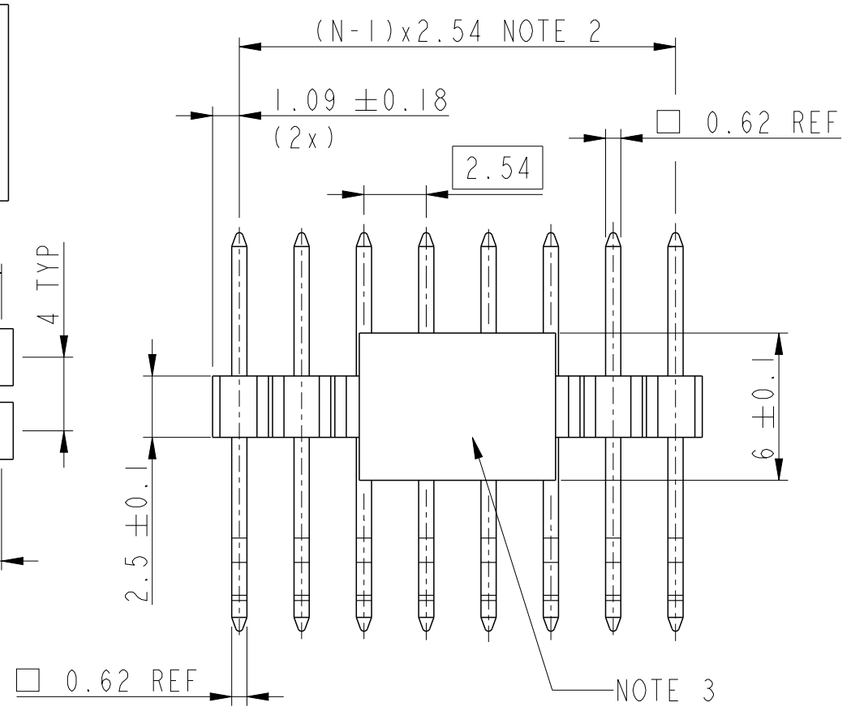

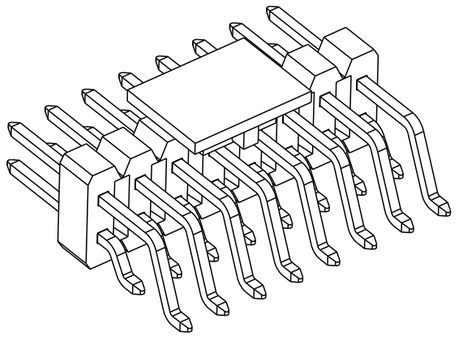

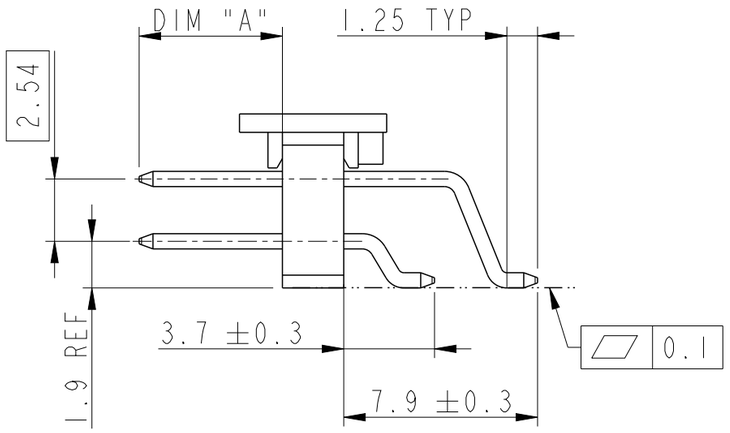

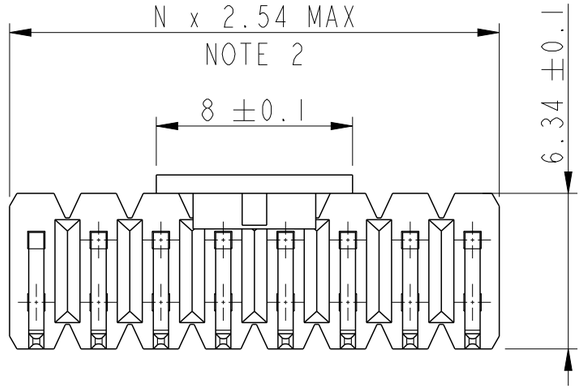

NOTES:
1 - MATERIAL:
- BODY: HIGH TEMPERATURE THERMOPLASTIC UL94V-0 COLOUR BLACK
- PIN: COPPER ALLOY
2 - TO DETERMINATE DIMENSIONS:
N = NUMBER OF POSITIONS
EXAMPLE: 8 POS x 2.54=20.32
3 - PACKAGING:
A = TAPE & REEL PACKAGING WITH PICK UP CAP AS PER GS-14-2357
- = POLYBAGS
C = CUSTOMER DEDICATED OPTION
4 - RoHs COMPATIBLE PRODUCT SPECIFICATIONS:
a - PLATING:
"LF" MEANS THE PRODUCT IS LEAD FREE, 2µm MINIMUM MATTE TIN OVER1.27µm, MINIMUM NICKEL UNDERPLATED
b - MANUFACTURING PROCESS COMPATIBILITY :
THE HOUSING WILL WITHSTAND EXPOSURE TO 260°C PEAK TEMPERATURE FOR 30 SECONDS MAX IN CONVECTION INFRA-RED OR VAPOR PHASE OR REFLOW OVEN
c - LABELLING :
MEETS PACKAGING SPECS AS PER GS-14-920
d - LEGAL STATEMENT :SEE GS-47-0004
5 - PRODUCT SPECIFICATION AS PER BUS-12-114 EXCEPT PIN RETENTION FORCE 5N MIN
6 - THIS PART SERIES IS NOT INITIALLY INTENDED FOR AUTOMOTIVE APPLICATIONS. ADDITIONAL FEES ARE CHARGEABLE FOR ANY ADDITIONAL QUALIFICATION AND TEST REPORTS PERFORMED OUTSIDE THE SCOPE OF THE STANDARD PRODUCT SPECIFICATIONS.
7 - UNLESS OTHERWISE APPROVED BY AMPHENOL, ALL PARTS AND COMPONENTS ARE DESIGNED & BUILT ACCORDING TO AMPHENOL'S SPECIFICATIONS WHICH ARE SUBJECT TO CHANGE WITHOUT NOTICE.

spec ref -			dr	Aymeric Soudy	2014/02/21	projection	MM
tolerance std ISO 406 ISO 1101	TOLERANCES UNLESS OTHERWISE SPECIFIED		eng	Laurent Mulin	2025/04/02		
			chr	-	-		
			appr	Lamy, Alexandr	2025/04/02	product family -	
surface - ISO 1302	linear	0.X ±0.3	title	2.54mm UNSH HEADER HORIZ DOUBLE ROW SMT		dwg no 10118084	rev H
		0.XX ±0.13					
		0.XXX ±0.050					
	angular	0° ±2°	www.fci.com	cat. no. -		Product - Customer Drw	sheet 1 of 1

size A3 | scale 4:1 | ecn no ELX-F-55232-1 | rel level Released

© 2020 Amphenol Corporation

Creo File:ELX-WC-A3C,REV F,2020-12-21