THIS DRAWING IS UNPUBLISHED. RELEASED FOR PUBLICATION 20
© COPYRIGHT 20 BY - ALL RIGHTS RESERVED.

LOC	DIST
GP	00

REVISIONS

P	LTR	DESCRIPTION	DATE	DWN	APVD
	A	RELEASE	09NOV2016	JY	SH
	A1	REVISED PER ECN-22-163746	11JUL2022	IT	SZ

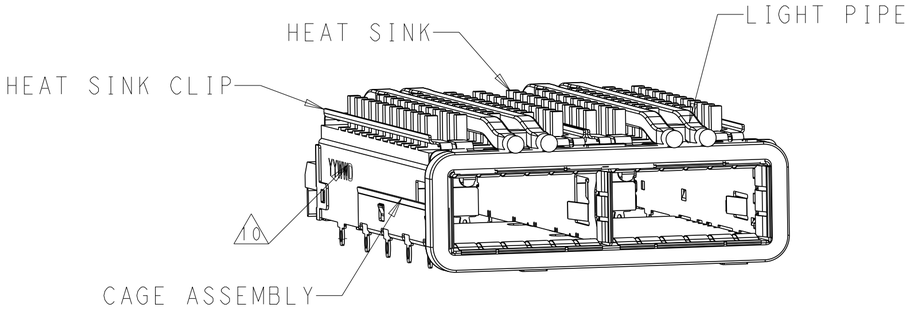

2-2170814-2 AS SHOWN
SCALE 2:1

1. COMPONENTS
   CAGE ASSEMBLY: NICKEL-SILVER ALLOY
   HEAT SINK: ALUMINUM/BLACK ANODIZE
   HEAT SINK CLIP: STAINLESS STEEL
   EMI SPRING: COPPER ALLOY/NICKEL PLATE
   LIGHT PIPE: CLEAR POLYCARBONATE
   GASKET: PLATED FILLED SILICONE

2. REFERENCE APPLICATION SPECIFICATION 114-32023 FOR RECOMMENDED DRILL HOLE DIAMETER AND PLATING THICKNESS

3. DATUM AND BASIC DIMENSION ESTABLISHED BY CUSTOMER

4. DIMENSION APPLIES WITH MODULE INSERTED IN CAGE

5. HEAT SINKS, HEAT SINK CLIPS AND LIGHT PIPES ARE SHIPPED ASSEMBLED ON CAGE

6. MINIMUM PC BOARD THICKNESS: SINGLE SIDED: 1.57 MIN
   DOUBLE SIDED: 3.00 MIN

7. DATUM -A- IS TOP SURFACE OF THE HOST BOARD.

8. THESE HOLES ARE OPTIONAL WHEN THE REAR PINS ARE REMOVED.

9. MATES WITH QSFP28 MSA COMPATIBLE TRANSCEIVER.

10. DATE CODE (YYWWD) MARKED APPROXIMATELY AS SHOWN.

11. NOTED DIMENSIONS ONLY APPLY TO CAGE ASSEMBLY WITH LIGHT PIPE.

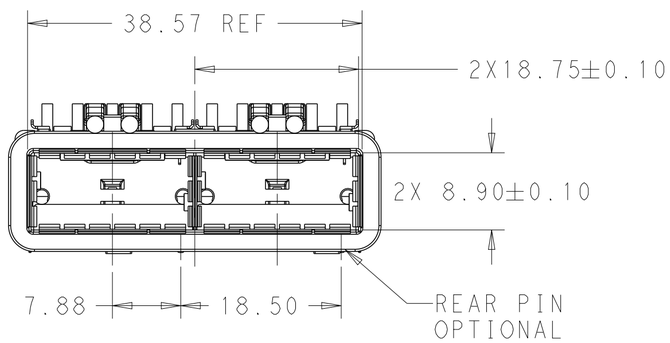

SCALE 2:1

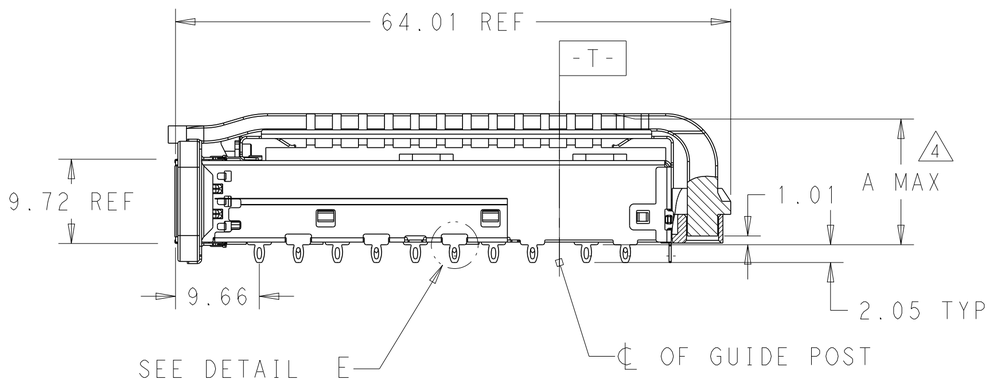

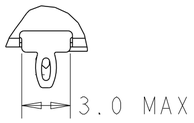

DETAIL E
SCALE 4:1

THIS DRAWING IS A CONTROLLED DOCUMENT.		DWN BING LIU 16SEP2014	TE Connectivity
DIMENSIONS: mm	TOLERANCES UNLESS OTHERWISE SPECIFIED: 0 PLC ±- 1 PLC ±0.25 2 PLC ±0.2 3 PLC ±- 4 PLC ±- ANGLES ±-	CHK JASON YANG 16SEP2014	NAME RECEPTACLE CAGE ASSEMLBY WITH HEAT SINKS AND LIGHT PIPES, THRU BEZEL, 1X2, QSFP28, GASKET
		APVD SEAN HAN 09NOV2016	
		PRODUCT SPEC 108-19428	
		APPLICATION SPEC 114-32023	SIZE A2 / CAGE CODE 00779 / DRAWING NO C-2170814 / RESTRICTED TO -
MATERIAL SEE NOTES	FINISH SEE NOTES	WEIGHT -	
		CUSTOMER DRAWING	SCALE 1:1 / SHEET 1 OF 9 / REV A1

THIS DRAWING IS UNPUBLISHED. RELEASED FOR PUBLICATION 20
© COPYRIGHT 20 BY - ALL RIGHTS RESERVED.

LOC	DIST

REVISIONS

P	LTR	DESCRIPTION	DATE	DWN	APVD
rev_sym_1		rev_desc_1	rev_date1	rev_dwn_1	rev_appr_1
rev_sym_2		rev_desc_2	rev_date2	rev_dwn_2	rev_appr_2
rev_sym_3		rev_desc_3	rev_date3	rev_dwn_3	rev_appr_3
rev_sym_4		rev_desc_4	rev_date4	rev_dwn_4	rev_appr_4

HEAT SINK OPTION

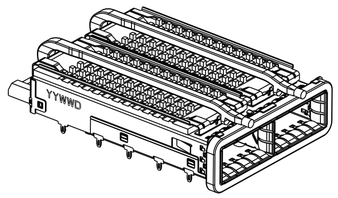

PCI HEAT SINK HEIGHT
SCALE 1:1

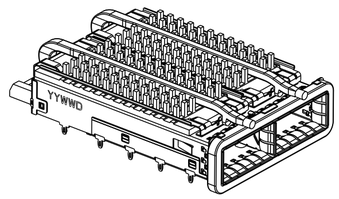

SAN HEAT SINK HEIGHT
SCALE 1:1

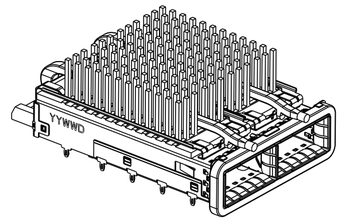

NETWORKING HEAT SINK HEIGHT
SCALE 1:1

LIGHT PIPE OPTION

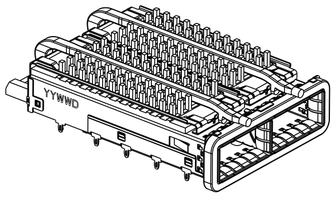

SINGLE LIGHT PIPE
SCALE 1:1

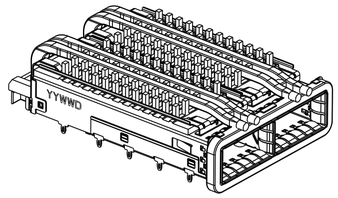

DUAL LIGHT PIPE
SCALE 1:1

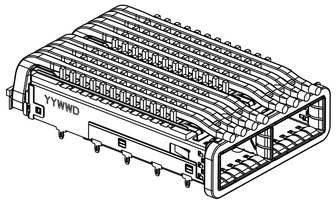

QUAD LIGHT PIPE
SCALE 1:1

OF REAR PIN OPTION

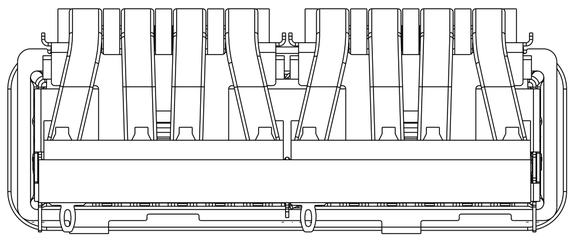

1 REAR PIN
SCALE 3:1

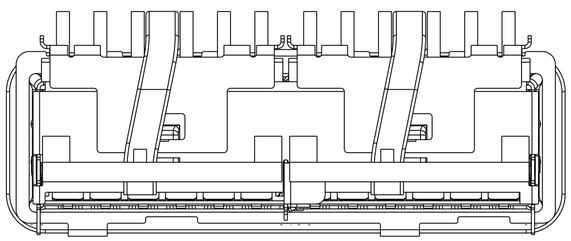

0 REAR PIN
SCALE 3:1

THIS DRAWING IS A CONTROLLED DOCUMENT.

DIMENSIONS: mm

TOLERANCES UNLESS OTHERWISE SPECIFIED:

0 PLC	±-
1 PLC	±0.25
2 PLC	±0.2
3 PLC	±-
4 PLC	±-
ANGLES	±-

MATERIAL: SEE NOTES material_2

FINISH: SEE NOTES finish_spec_2

DWN	BING LIU	16SEP2014
CHK	JASON YANG	16SEP2014
APVD	SEAN HAN	09NOV2016
PRODUCT SPEC	108-19428	
APPLICATION SPEC	114-32023	
WEIGHT	-	

TE Connectivity

NAME: RECEPTACLE CAGE ASSEMLBY WITH HEAT SINKS AND LIGHT PIPES, THRU BEZEL, 1X2, QSFP28, GASKET

SIZE	CAGE CODE	DRAWING NO	RESTRICTED TO
A2	00779	C-2170814	-

CUSTOMER DRAWING | SCALE 1:1 | SHEET 2 OF 9 | REV A1

THIS DRAWING IS UNPUBLISHED. RELEASED FOR PUBLICATION 20
© COPYRIGHT 20 BY - ALL RIGHTS RESERVED.

LOC	DIST

REVISIONS

P	LTR	DESCRIPTION	DATE	DWN	APVD
rev_sym_1		rev_desc_1	rev_date1	rev_dwn_1	rev_appr_1
rev_sym_2		rev_desc_2	rev_date2	rev_dwn_2	rev_appr_2
rev_sym_3		rev_desc_3	rev_date3	rev_dwn_3	rev_appr_3
rev_sym_4		rev_desc_4	rev_date4	rev_dwn_4	rev_appr_4

0	23.0	NETWORKING	QUAD	4-2170814-6
0	16.0	SAN	QUAD	4-2170814-5
0	13.7	PCI	QUAD	4-2170814-4
1	23.0	NETWORKING	QUAD	4-2170814-3
1	16.0	SAN	QUAD	4-2170814-2
1	13.7	PCI	QUAD	4-2170814-1
0	23.0	NETWORKING	DUAL	2-2170814-6
0	16.0	SAN	DUAL	2-2170814-5
0	13.7	PCI	DUAL	2-2170814-4
1	23.0	NETWORKING	DUAL	2-2170814-3
1	16.0	SAN	DUAL	2-2170814-2
1	13.7	PCI	DUAL	2-2170814-1
0	23.0	NETWORKING	SINGLE	2170814-6
0	16.0	SAN	SINGLE	2170814-5
0	13.7	PCI	SINGLE	2170814-4
1	23.0	NETWORKING	SINGLE	2170814-3
1	16.0	SAN	SINGLE	2170814-2
1	13.7	PCI	SINGLE	2170814-1
# OF REAR PIN	DIM A	APPLICATION	LIGHT PIPE OPTION	PART NUMBER

THIS DRAWING IS A CONTROLLED DOCUMENT.

DIMENSIONS: mm

TOLERANCES UNLESS OTHERWISE SPECIFIED:
0 PLC ±-
1 PLC ±0.25
2 PLC ±0.2
3 PLC ±-
4 PLC ±-
ANGLES ±-

MATERIAL: SEE NOTES material_2

FINISH: SEE NOTES finish_spec_2

DWN: BING LIU 16SEP2014
CHK: JASON YANG 16SEP2014
APVD: SEAN HAN 09NOV2016
PRODUCT SPEC: 108-19428
APPLICATION SPEC: 114-32023
WEIGHT: -

TE Connectivity

NAME: RECEPTACLE CAGE ASSEMLBY WITH HEAT SINKS AND LIGHT PIPES, THRU BEZEL, 1X2, QSFP28, GASKET

SIZE	CAGE CODE	DRAWING NO	RESTRICTED TO
A2	00779	C-2170814	-

CUSTOMER DRAWING | SCALE 1:1 | SHEET 3 OF 9 | REV A1

THIS DRAWING IS UNPUBLISHED. RELEASED FOR PUBLICATION 20
© COPYRIGHT 20 BY - ALL RIGHTS RESERVED.

LOC	DIST

REVISIONS

P	LTR	DESCRIPTION	DATE	DWN	APVD
rev_sym_1		rev_desc_1	rev_date1	rev_dwn_1	rev_appr_1
rev_sym_2		rev_desc_2	rev_date2	rev_dwn_2	rev_appr_2
rev_sym_3		rev_desc_3	rev_date3	rev_dwn_3	rev_appr_3
rev_sym_4		rev_desc_4	rev_date4	rev_dwn_4	rev_appr_4

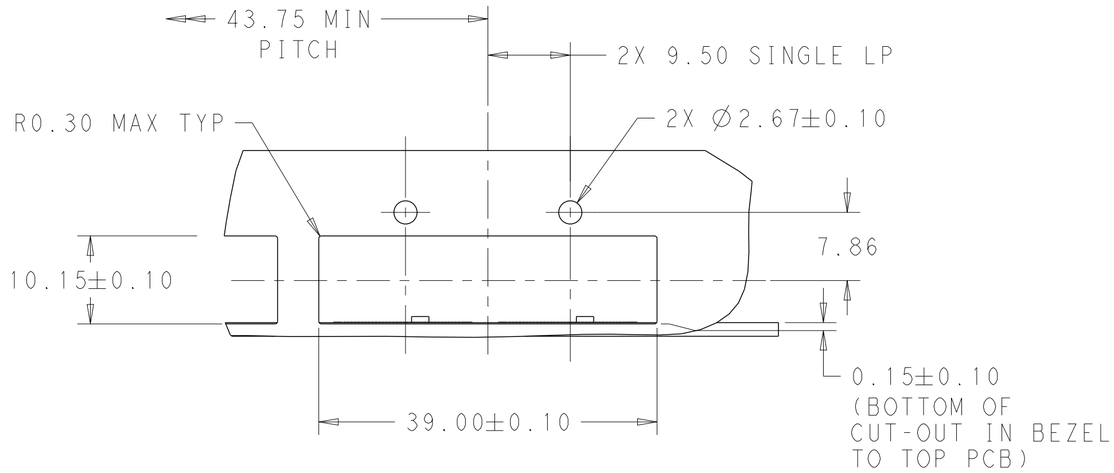

CAGE ASSEMBLY IS OMITED

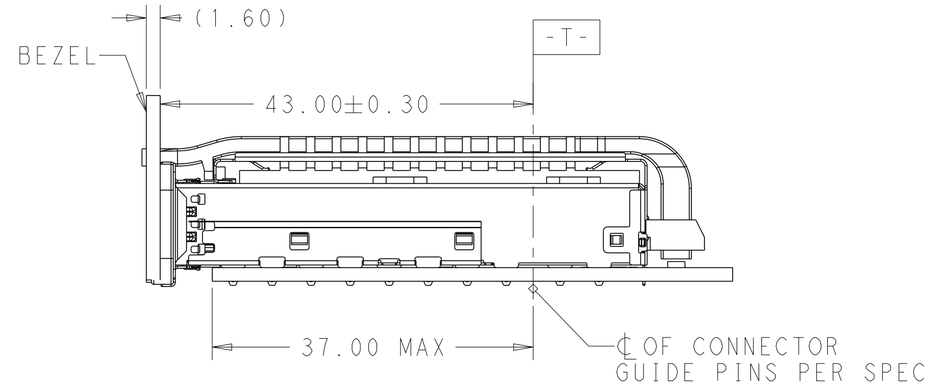

SINGLE SIDE MOUNTING
SCALE 2:1

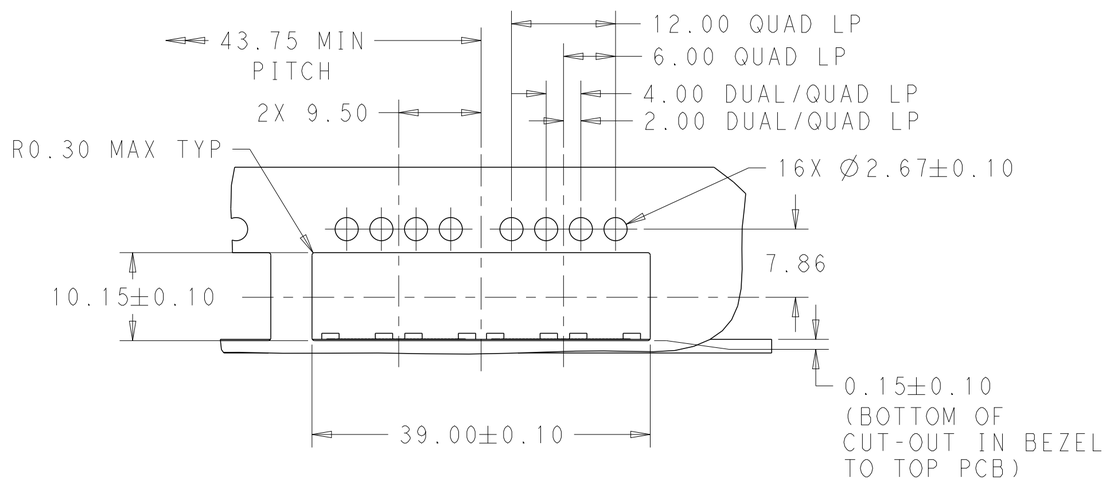

CAGE ASSEMBLY IS OMITED

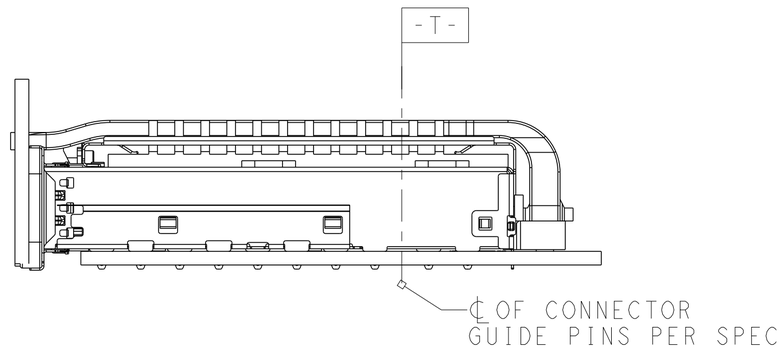

SINGLE SIDE MOUNTING
SCALE 2:1

THIS DRAWING IS A CONTROLLED DOCUMENT.

DIMENSIONS: mm

TOLERANCES UNLESS OTHERWISE SPECIFIED:
0 PLC ±-
1 PLC ±0.25
2 PLC ±0.2
3 PLC ±-
4 PLC ±-
ANGLES ±-

MATERIAL: SEE NOTES material_2
FINISH: SEE NOTES finish_spec_2

DWN BING LIU 16SEP2014
CHK JASON YANG 16SEP2014
APVD SEAN HAN 09NOV2016
PRODUCT SPEC 108-19428
APPLICATION SPEC 114-32023
WEIGHT -

TE Connectivity

NAME: RECEPTACLE CAGE ASSEMLBY WITH HEAT SINKS AND LIGHT PIPES, THRU BEZEL, 1X2, QSFP28, GASKET

SIZE A2 | CAGE CODE 00779 | DRAWING NO C-2170814 | RESTRICTED TO -

CUSTOMER DRAWING | SCALE 1:1 | SHEET 4 OF 9 | REV A1

THIS DRAWING IS UNPUBLISHED. RELEASED FOR PUBLICATION 20
© COPYRIGHT 20 BY - ALL RIGHTS RESERVED.

LOC	DIST

REVISIONS

P	LTR	DESCRIPTION	DATE	DWN	APVD
rev_sym_1		REV SHEET 1	rev_date1	rev_dwn_1	rev_appr_1
rev_sym_2		rev_desc_2	rev_date2	rev_dwn_2	rev_appr_2
rev_sym_3		rev_desc_3	rev_date3	rev_dwn_3	rev_appr_3
rev_sym_4		rev_desc_4	rev_date4	rev_dwn_4	rev_appr_4

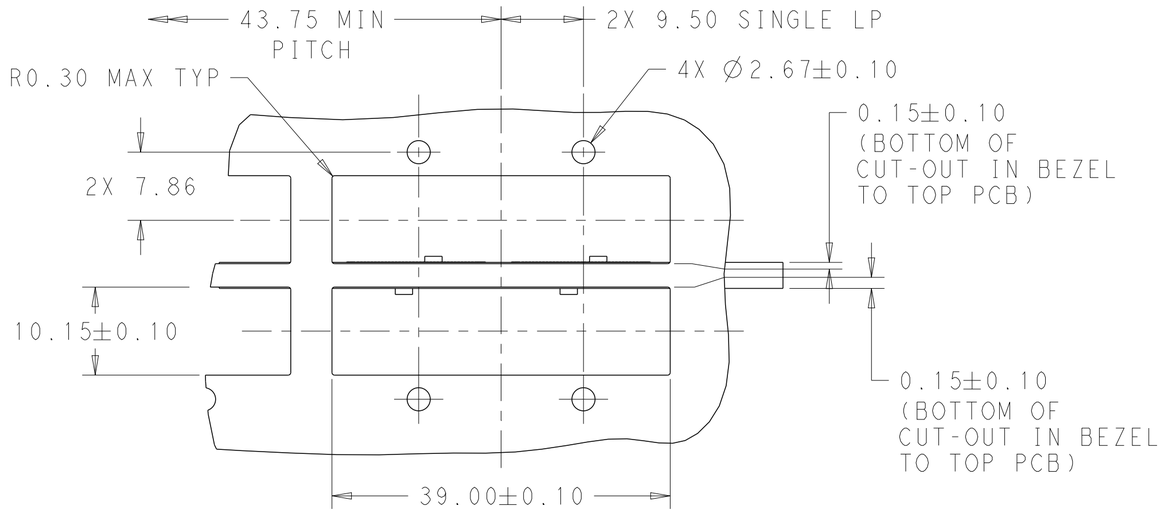

CAGE ASSEMBLY IS OMITED

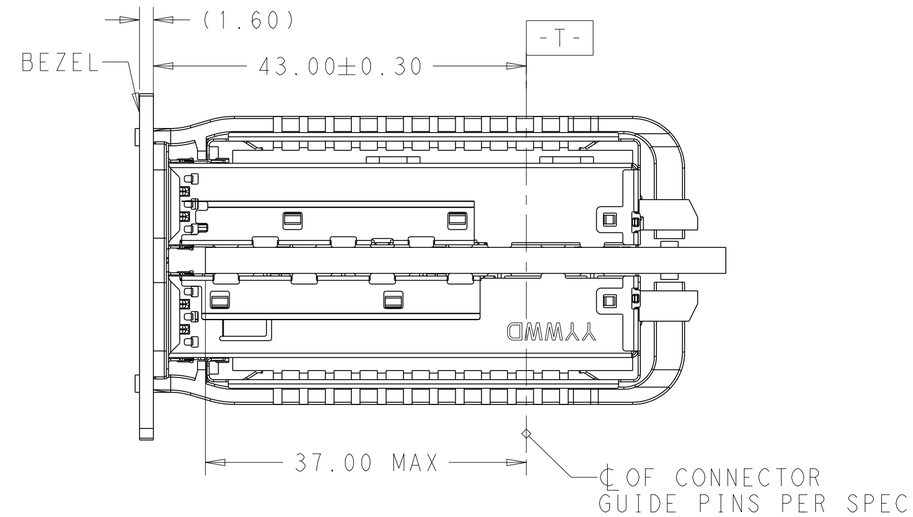

BELLY TO BELLY MOUNTING
SCALE 2:1

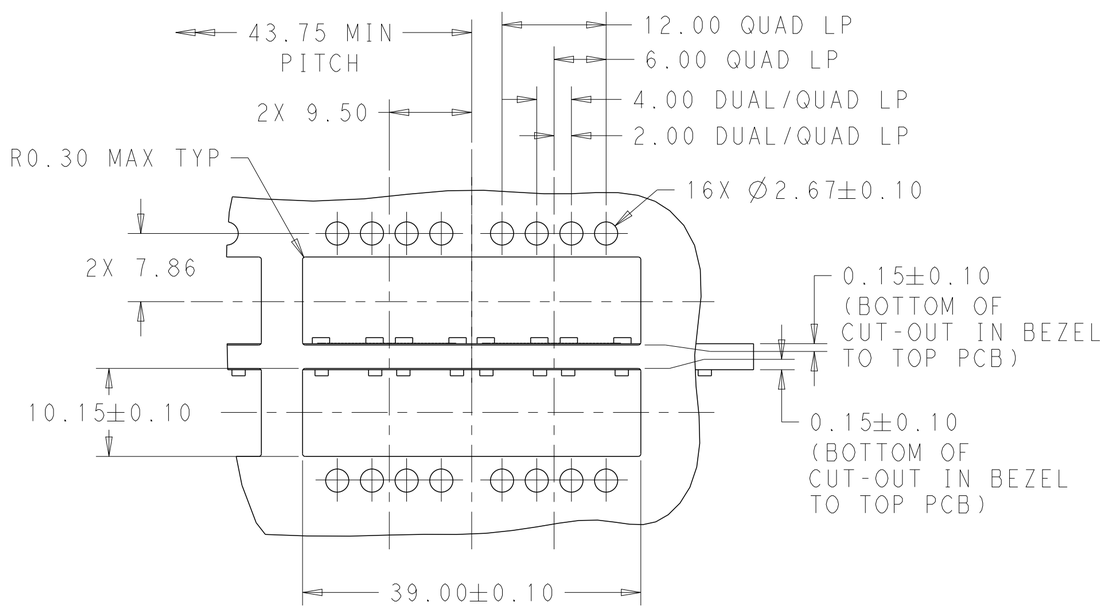

CAGE ASSEMBLY IS OMITED

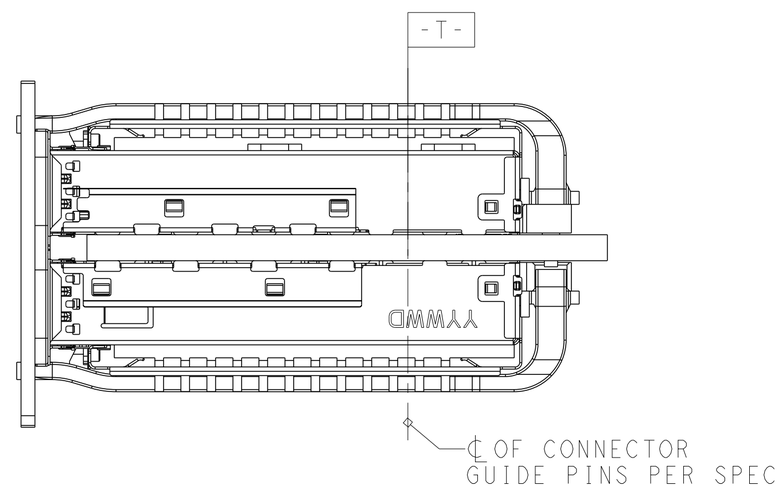

BELLY TO BELLY MOUNTING
SCALE 2:1

THIS DRAWING IS A CONTROLLED DOCUMENT.

DIMENSIONS: mm

TOLERANCES UNLESS OTHERWISE SPECIFIED:
0 PLC ±-
1 PLC ±0.25
2 PLC ±0.2
3 PLC ±-
4 PLC ±-
ANGLES ±-

MATERIAL: SEE NOTES material_2
FINISH: SEE NOTES finish_spec_2

DWN BING LIU 16SEP2014
CHK JASON YANG 16SEP2014
APVD SEAN HAN 09NOV2016
PRODUCT SPEC 108-19428
APPLICATION SPEC 114-32023
WEIGHT -

TE Connectivity

NAME: RECEPTACLE CAGE ASSEMLBY WITH HEAT SINKS AND LIGHT PIPES, THRU BEZEL, 1X2, QSFP28, GASKET

SIZE	CAGE CODE	DRAWING NO	RESTRICTED TO
A2	00779	C-2170814	-

CUSTOMER DRAWING | SCALE 1:1 | SHEET 5 OF 9 | REV A1

THIS DRAWING IS UNPUBLISHED. RELEASED FOR PUBLICATION 20
© COPYRIGHT 20 BY - ALL RIGHTS RESERVED.

LOC	DIST

REVISIONS

P	LTR	DESCRIPTION	DATE	DWN	APVD
rev_sym_1		SEE SHEET 11	rev_date1	rev_dwn_1	rev_appr_1
rev_sym_2		rev_desc_2	rev_date2	rev_dwn_2	rev_appr_2
rev_sym_3		rev_desc_3	rev_date3	rev_dwn_3	rev_appr_3
rev_sym_4		rev_desc_4	rev_date4	rev_dwn_4	rev_appr_4

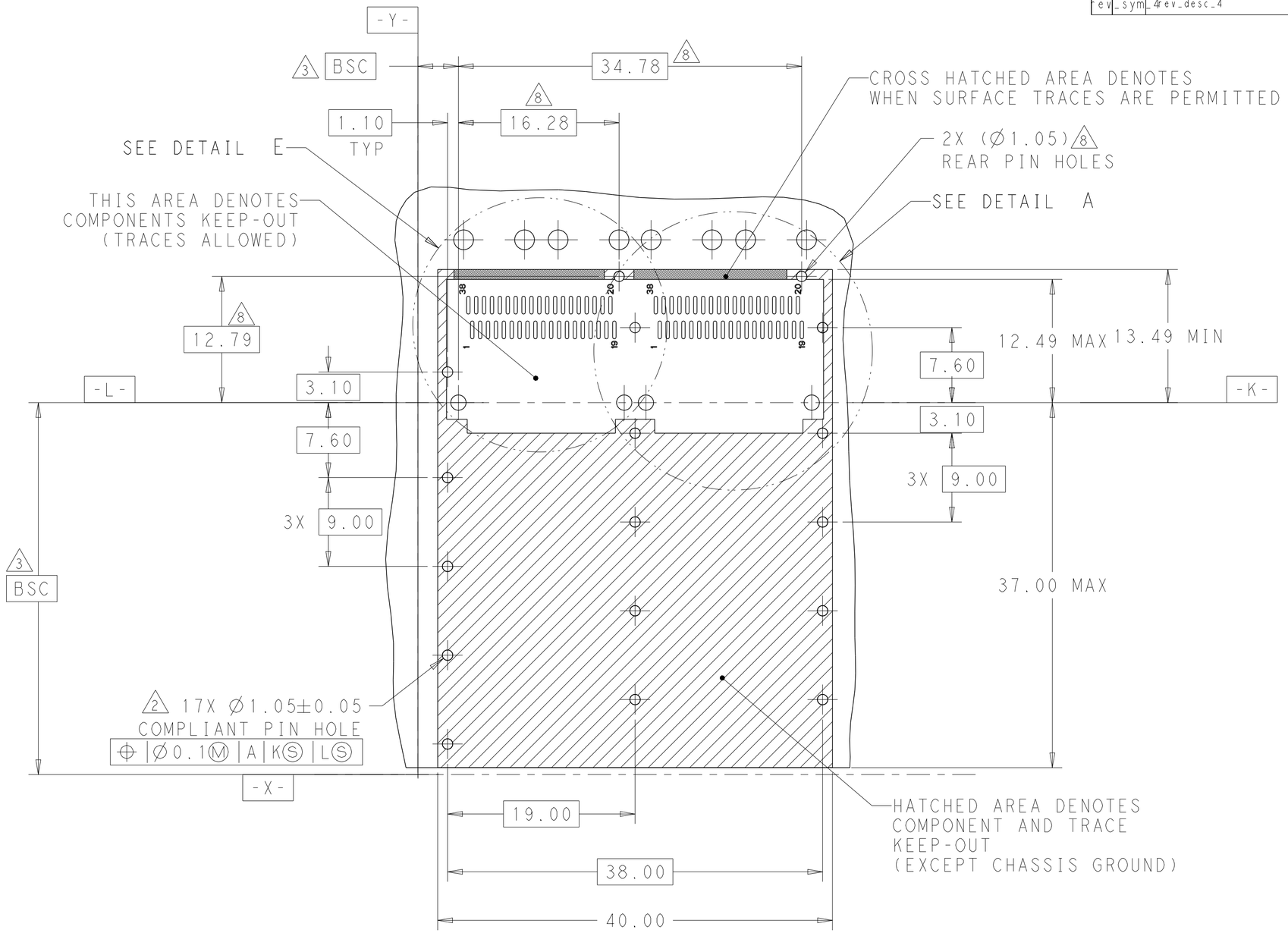

RECOMMENDED PCB LAYOUT
SINGLE TYPE
PCB TOLERANCE: ±0.05
SCALE 3:1

THIS DRAWING IS A CONTROLLED DOCUMENT.

DIMENSIONS: mm

TOLERANCES UNLESS OTHERWISE SPECIFIED:
0 PLC ±-
1 PLC ±0.25
2 PLC ±0.2
3 PLC ±-
4 PLC ±-
ANGLES ±-

MATERIAL: SEE NOTES material_2
FINISH: SEE NOTES finish_spec_2

DWN BING LIU 16SEP2014
CHK JASON YANG 16SEP2014
APVD SEAN HAN 09NOV2016
PRODUCT SPEC 108-19428
APPLICATION SPEC 114-32023
WEIGHT -

TE Connectivity

NAME: RECEPTACLE CAGE ASSEMLBY WITH HEAT SINKS AND LIGHT PIPES, THRU BEZEL, 1X2, QSFP28, GASKET

SIZE A2 | CAGE CODE 00779 | DRAWING NO C-2170814 | RESTRICTED TO -

CUSTOMER DRAWING | SCALE 1:1 | SHEET 6 OF 9 | REV A1

1471-9 (3/11)

THIS DRAWING IS UNPUBLISHED. RELEASED FOR PUBLICATION 20
© COPYRIGHT 20 BY - ALL RIGHTS RESERVED.

LOC	DIST

REVISIONS

P	LTR	DESCRIPTION	DATE	DWN	APVD
rev_sym_1		SEE SHEET 11	rev_date1	rev_dwn_1	rev_appr_1
rev_sym_2		rev_desc_2	rev_date2	rev_dwn_2	rev_appr_2
rev_sym_3		rev_desc_3	rev_date3	rev_dwn_3	rev_appr_3
rev_sym_4		rev_desc_4	rev_date4	rev_dwn_4	rev_appr_4

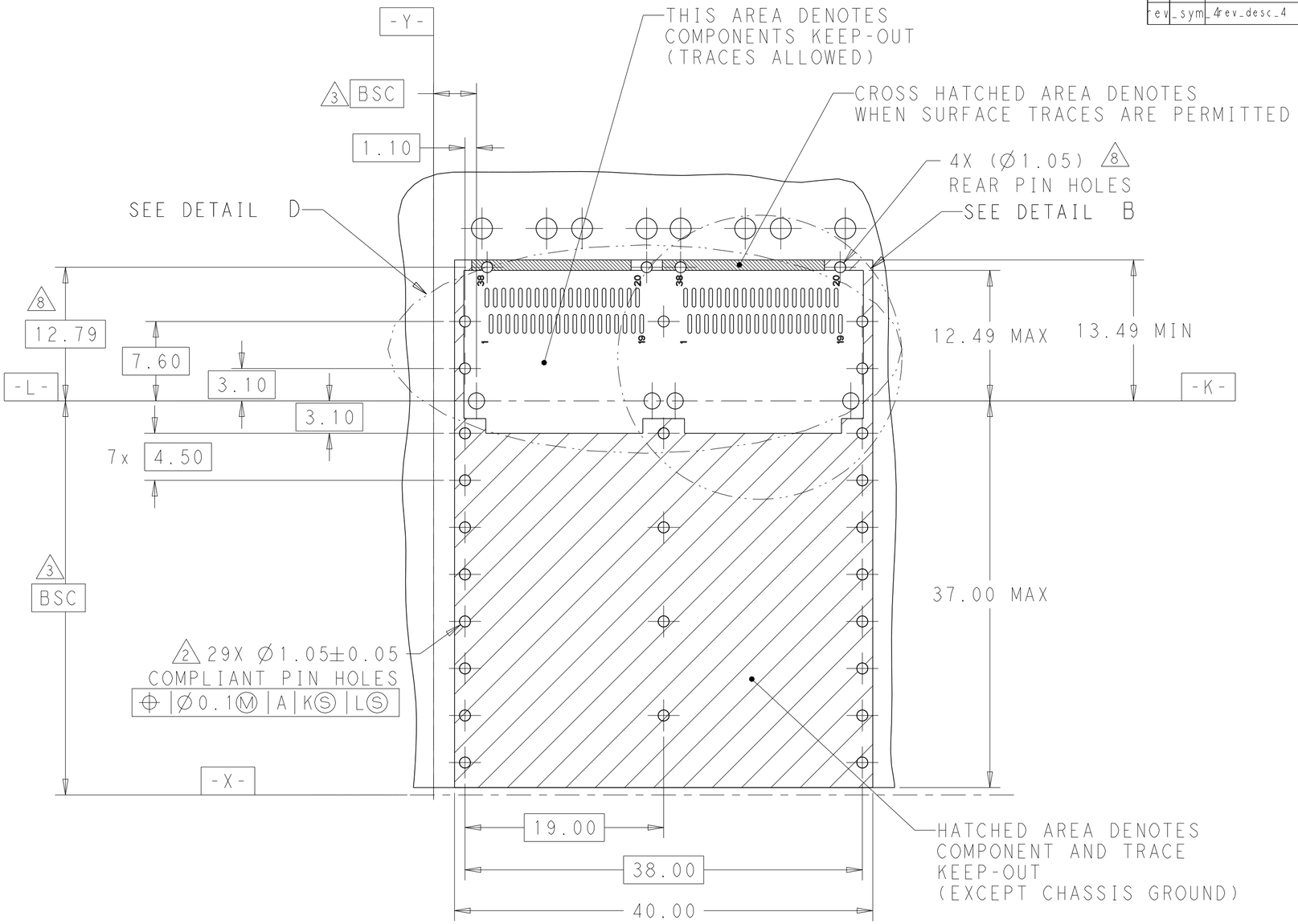

RECOMMENDED PCB LAYOUT
BELLY TO BELLY TYPE
PCB TOLERANCE: ±0.05
SCALE 3:1

THIS DRAWING IS A CONTROLLED DOCUMENT.

DIMENSIONS: mm

TOLERANCES UNLESS OTHERWISE SPECIFIED:
0 PLC ±-
1 PLC ±0.25
2 PLC ±0.2
3 PLC ±-
4 PLC ±-
ANGLES ±-

MATERIAL: SEE NOTES material_2
FINISH: SEE NOTES finish_spec_2

DWN BING LIU 16SEP2014
CHK JASON YANG 16SEP2014
APVD SEAN HAN 09NOV2016
PRODUCT SPEC 108-19428
APPLICATION SPEC 114-32023
WEIGHT -

TE Connectivity

NAME: RECEPTACLE CAGE ASSEMLBY WITH HEAT SINKS AND LIGHT PIPES, THRU BEZEL, 1X2, QSFP28, GASKET

SIZE A2 | CAGE CODE 00779 | DRAWING NO C-2170814 | RESTRICTED TO -

CUSTOMER DRAWING | SCALE 1:1 | SHEET 7 OF 9 | REV A1

THIS DRAWING IS UNPUBLISHED. RELEASED FOR PUBLICATION 20
© COPYRIGHT 20 BY - ALL RIGHTS RESERVED.

LOC	DIST

REVISIONS

P	LTR	DESCRIPTION	DATE	DWN	APVD
rev_sym_1		SEE SHEET 11	rev_date1	rev_dwn_1	rev_appr_1
rev_sym_2		rev_desc_2	rev_date2	rev_dwn_2	rev_appr_2
rev_sym_3		rev_desc_3	rev_date3	rev_dwn_3	rev_appr_3
rev_sym_4		rev_desc_4	rev_date4	rev_dwn_4	rev_appr_4

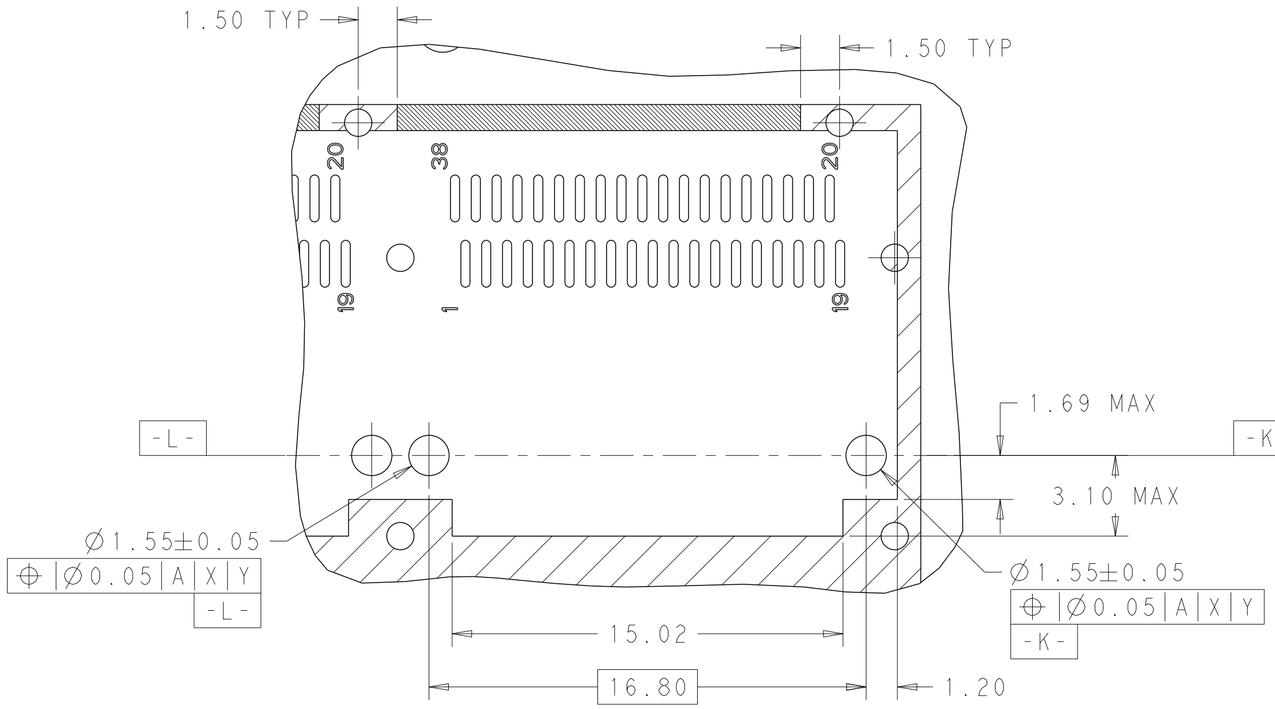

DETAIL A
SCALE 6:1

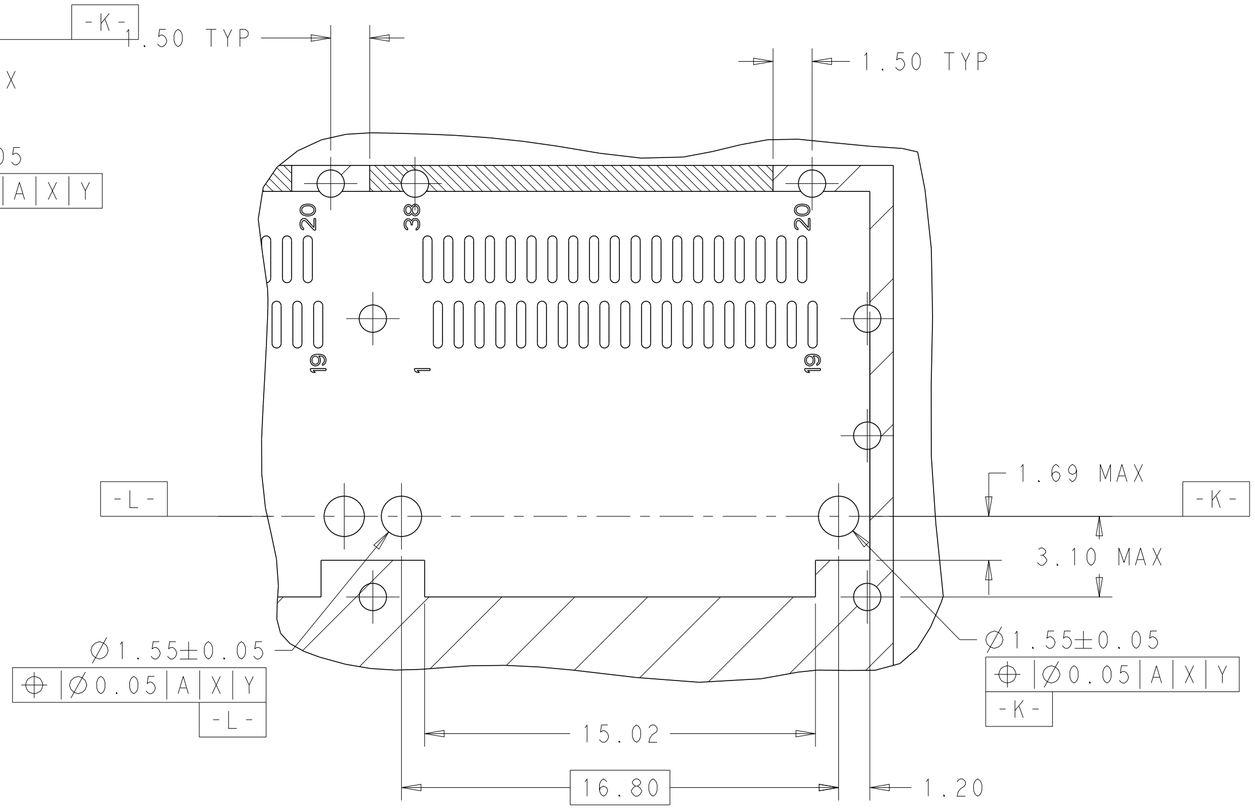

DETAIL B
SCALE 6:1

THIS DRAWING IS A CONTROLLED DOCUMENT.

DIMENSIONS: mm

TOLERANCES UNLESS OTHERWISE SPECIFIED:
0 PLC ±-
1 PLC ±0.25
2 PLC ±0.2
3 PLC ±-
4 PLC ±-
ANGLES ±-

MATERIAL: SEE NOTES material_2
FINISH: SEE NOTES finish_spec_2

DWN BING LIU 16SEP2014
CHK JASON YANG 16SEP2014
APVD SEAN HAN 09NOV2016
PRODUCT SPEC 108-19428
APPLICATION SPEC 114-32023
WEIGHT -

TE Connectivity

NAME: RECEPTACLE CAGE ASSEMLBY WITH HEAT SINKS AND LIGHT PIPES, THRU BEZEL, 1X2, QSFP28, GASKET

SIZE A2 | CAGE CODE 00779 | DRAWING NO C-2170814 | RESTRICTED TO -

CUSTOMER DRAWING | SCALE 1:1 | SHEET 8 OF 9 | REV A1

1471-9 (3/11)

THIS DRAWING IS UNPUBLISHED. RELEASED FOR PUBLICATION 20
© COPYRIGHT 20 BY - ALL RIGHTS RESERVED.

LOC	DIST

REVISIONS

P	LTR	DESCRIPTION	DATE	DWN	APVD
rev_sym_1		SEE SHEET 11	rev_date1	rev_dwn_1	rev_appr_1
rev_sym_2		rev_desc_2	rev_date2	rev_dwn_2	rev_appr_2
rev_sym_3		rev_desc_3	rev_date3	rev_dwn_3	rev_appr_3
rev_sym_4		rev_desc_4	rev_date4	rev_dwn_4	rev_appr_4

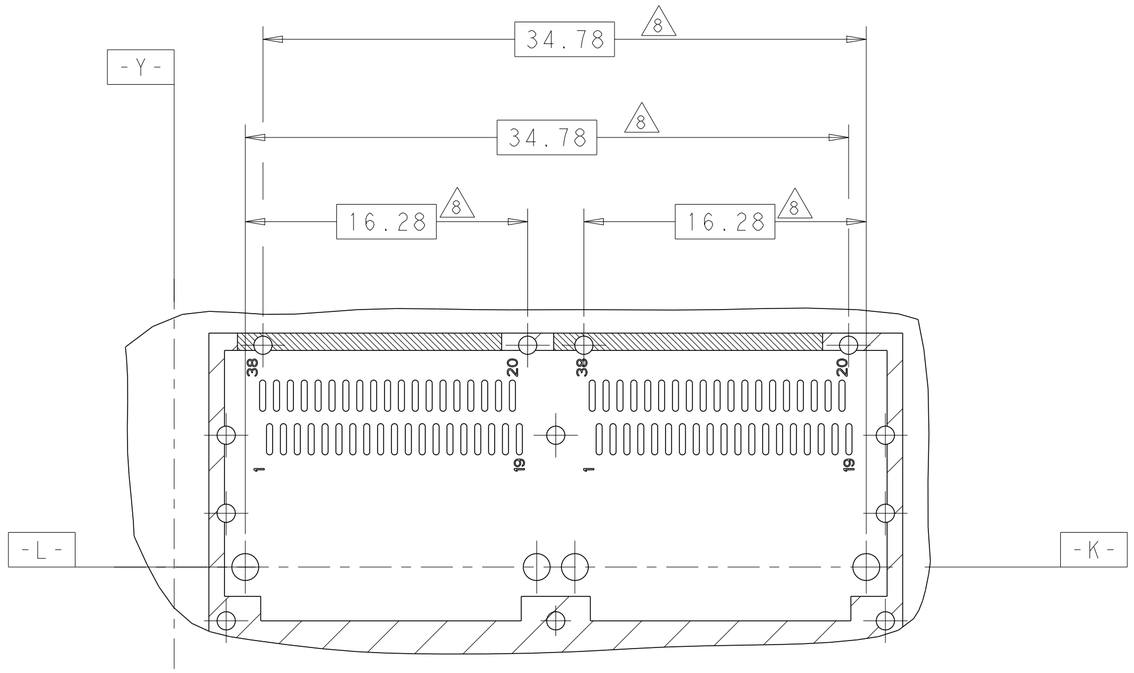

DETAIL D
SCALE 4:1

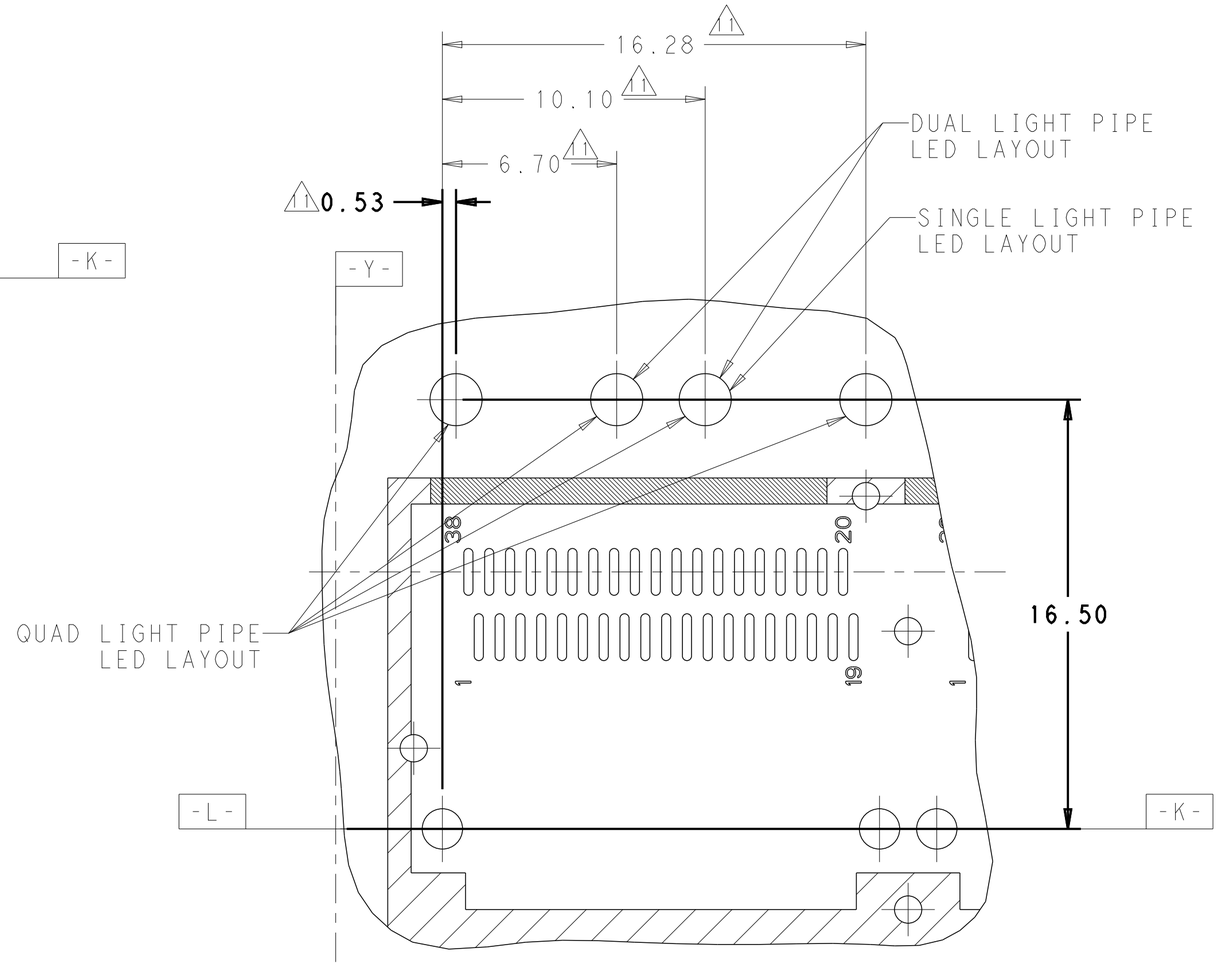

DETAIL E
SCALE 6:1

THIS DRAWING IS A CONTROLLED DOCUMENT.

DIMENSIONS: mm

TOLERANCES UNLESS OTHERWISE SPECIFIED:
0 PLC ±-
1 PLC ±0.25
2 PLC ±0.2
3 PLC ±-
4 PLC ±-
ANGLES ±-

MATERIAL: SEE NOTES material_2
FINISH: SEE NOTES finish_spec_2

DWN BING LIU 16SEP2014
CHK JASON YANG 16SEP2014
APVD SEAN HAN 09NOV2016
PRODUCT SPEC 108-19428
APPLICATION SPEC 114-32023
WEIGHT -

TE Connectivity

NAME: RECEPTACLE CAGE ASSEMLBY WITH HEAT SINKS AND LIGHT PIPES, THRU BEZEL, 1X2, QSFP28, GASKET

SIZE A2 | CAGE CODE 00779 | DRAWING NO C-2170814 | RESTRICTED TO -

CUSTOMER DRAWING | SCALE 1:1 | SHEET 9 OF 9 | REV A1

1471-9 (3/11)