THIS DRAWING IS UNPUBLISHED. RELEASED FOR PUBLICATION 20
© COPYRIGHT 20 BY - ALL RIGHTS RESERVED.

REVISIONS

P	LTR	DESCRIPTION	DATE	DWN	APVD
	C2	REVISED PER ECR-25-261399	11NOV2025	MK	SSM

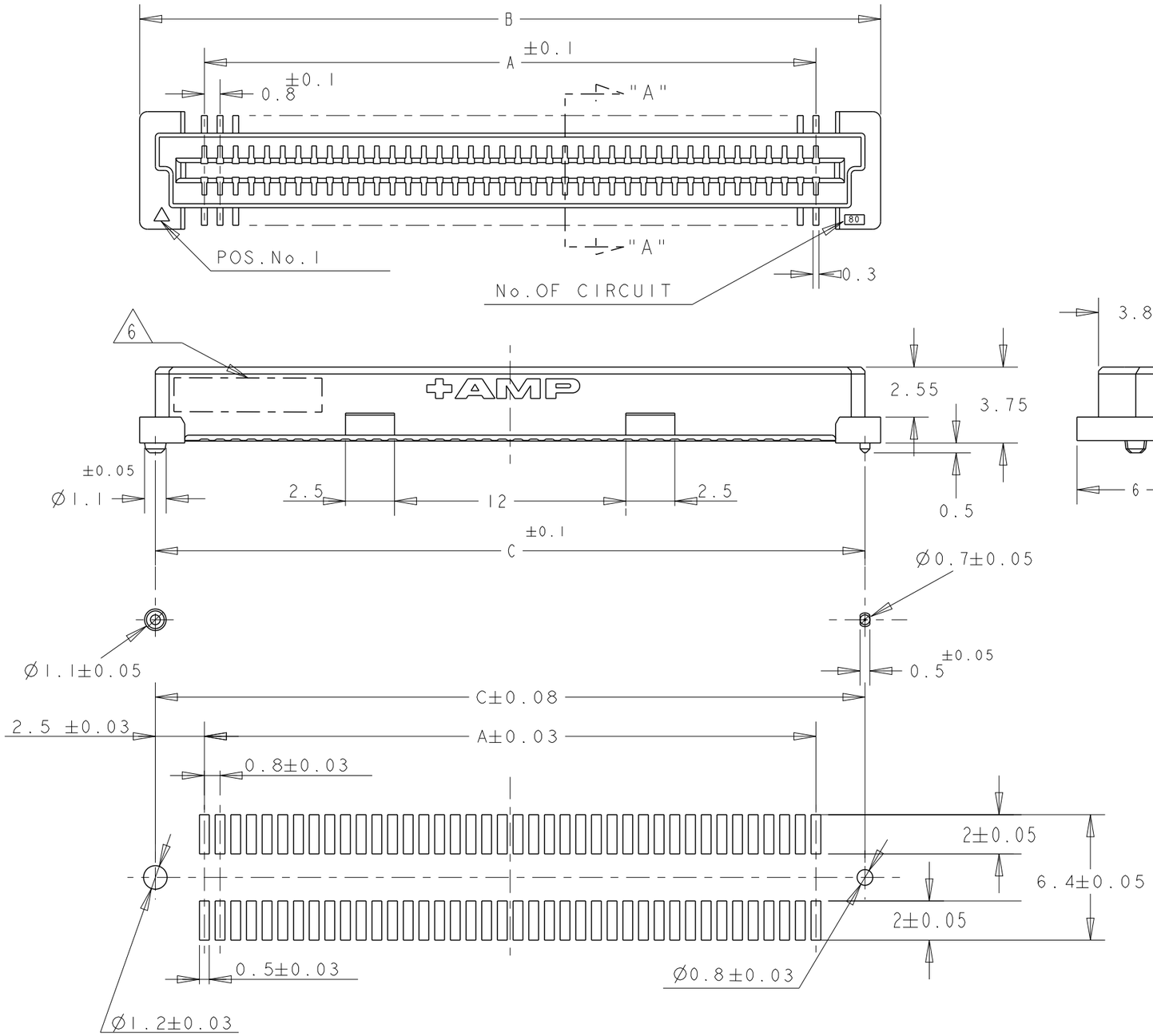

RECOMMENDED P.C.BOARD LAYOUT

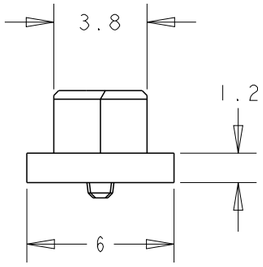

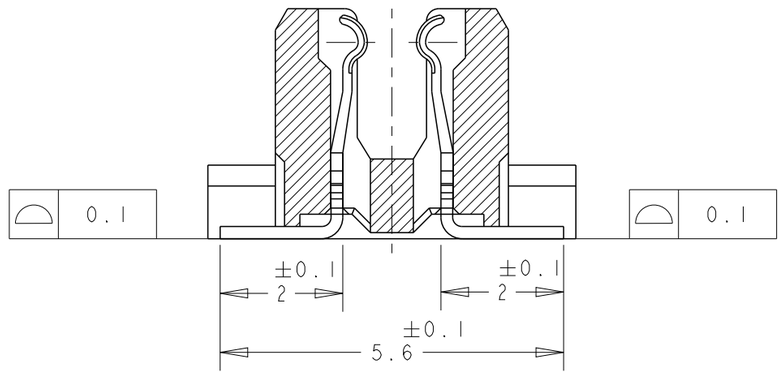

SECT."A"-"A"
(SCALE 10-1)

NOTES;

1. MATERIAL:
   HOUSING: L.C.P (HIGH TEMP THERMOPLASTIC) UL 94V-0, NATURAL.
   CONTACT: BERYLIUM COPPER (C)
2. FINISH: CONTACT AREA: 0.0002 MIN GOLD ON 0.0013 MIN ALL OVER NICKEL.
   SOLDERING AREA: 0.00127 MIN MATTE TIN.
3. POSITION SERIES: SEE TABLE.
4. CONN STACK HEIGHT COMBINE OF PLUG "Y"H VS REC "X"H.
   STACK HEIGHT = Y + X - 5
5. FINISH: CONTACT AREA: 0.00038 MIN GOLD ON 0.0013 MIN ALL OVER NICKEL.
   SOLDERING AREA: 0.00127 MIN MATTE TIN.
6. DATE CODE MARKING.
7. CONNECTOR WITH BLACK HOUSING AND POLYIMIDE COVER

P/N SEE SHEET 2 & 3 OF 3.

CONNECTOR ONLY

LOW HALOGEN

THIS DRAWING IS A CONTROLLED DOCUMENT.

DIMENSIONS: mm

TOLERANCES UNLESS OTHERWISE SPECIFIED:
0 PLC ±-
1 PLC ±0.3
2 PLC ±0.25
3 PLC ±0.2
4 PLC ±
ANGLES ±3°

MATERIAL 1

FINISH SEE P/N TABLE

DWN SK LEAW 17MAY2004
CHK ERIC TNG
APVD SF LEONG
PRODUCT SPEC 108-5390
APPLICATION SPEC 114-5254
WEIGHT

CUSTOMER DRAWING

TE Connectivity

NAME RECEPTACLE ASSEMBLY 5H TYPE (0.5 BOSS LENGTH) FOR FH0.8MM PITCH B-T-B CONNECTOR

SIZE	CAGE CODE	DRAWING NO	RESTRICTED TO
A3	-	C-5177983	

SCALE	SHEET	REV
4:1	1 OF 3	C2

1470-19 (3/13)

THIS DRAWING IS UNPUBLISHED. RELEASED FOR PUBLICATION 20
© COPYRIGHT - BY - ALL RIGHTS RESERVED.

REVISIONS

P	LTR	DESCRIPTION	DATE	DWN	APVD
	-	SEE SHEET 1 OF 3	-	-	-

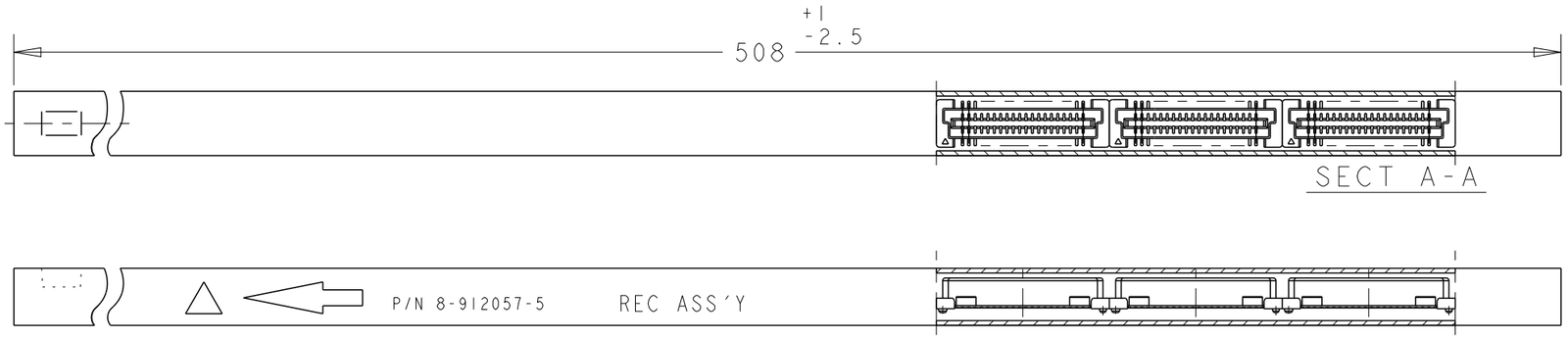

REFERENCE PICTURE OF TUBE PACK

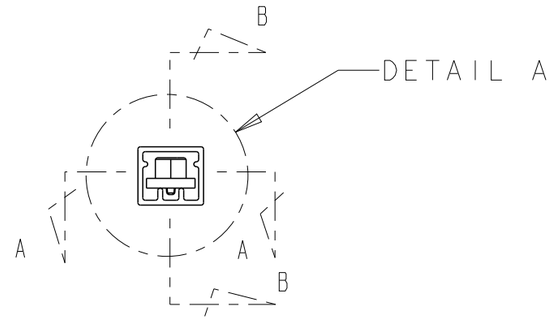

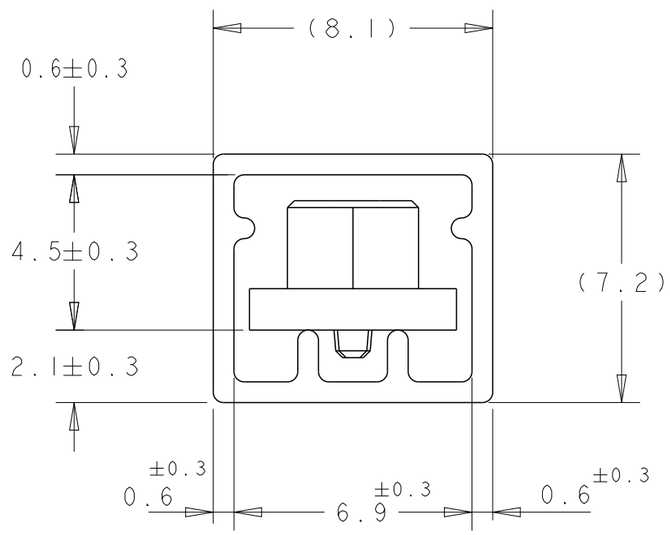

DETAIL A

5	5	84.2	85.8	79.2	200	2-	-0
	6	76.2	77.8	71.2	180	1-	-9
	6	68.2	69.8	63.2	160	1-	-8
	7	60.2	61.8	55.2	120	1-	-6
	9	52.2	53.8	47.2	120	1-	-5
	10	44.2	45.8	39.2	100	1-	-4
	12	36.2	37.8	31.2	80	1-	-3
	16	28.2	29.8	23.2	60	1-	-2
	22	20.2	21.8	15.2	40	1-	-1
2	5	84.2	85.8	79.2	200	1-	-0
	6	76.2	77.8	71.2	180		-9
	6	68.2	69.8	63.2	160		-8
	7	60.2	61.8	55.2	140		-6
	9	52.2	53.8	47.2	120		-5
	10	44.2	45.8	39.2	100		-4
	12	36.2	37.8	31.2	80		-3
	16	28.2	29.8	23.2	60		-2
	22	20.2	21.8	15.2	40	5177983-1	
FINISH	QTY	C	B	A	POS	CONN P/N	

WITHOUT POLYIMIDE COVER

LOW HALOGEN

THIS DRAWING IS A CONTROLLED DOCUMENT.

DIMENSIONS: mm

TOLERANCES UNLESS OTHERWISE SPECIFIED:
0 PLC ±
1 PLC ±0.3
2 PLC ±0.25
3 PLC ±0.2
4 PLC ±-
ANGLES ±3°

MATERIAL: SEE NOTE 1

FINISH: SEE P/N TABLE

DWN SK LEAW 17MAY2004
CHK ERIC TNG 02APR2015
APVD SF LEONG 02APR2015
PRODUCT SPEC 108-5390
APPLICATION SPEC 114-5254
WEIGHT

TE Connectivity

NAME: RECEPTACLE ASSEMBLY 5H TYPE (0.5 BOSS LENGTH) FOR FH0.8MM PITCH B-T-B CONNECTOR

SIZE A3 | CAGE CODE | DRAWING NO C-5177983 | RESTRICTED TO

CUSTOMER DRAWING | SCALE 4:1 | SHEET 2 OF 3 | REV C2

THIS DRAWING IS UNPUBLISHED. RELEASED FOR PUBLICATION 20
© COPYRIGHT 20 BY - ALL RIGHTS RESERVED.

REVISIONS

P	LTR	DESCRIPTION	DATE	DWN	APVD
	-	SEE SHEET 1 OF 3	-	-	-

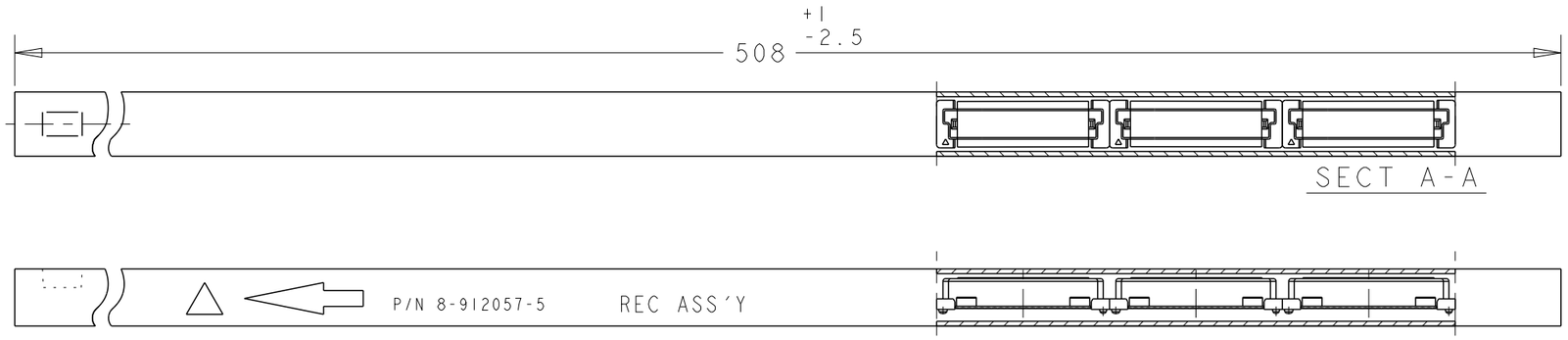

SECT A-A

SECT B-B

REFERENCE PICTURE OF TUBE PACK

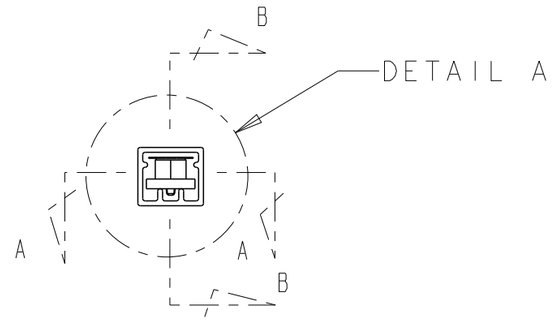

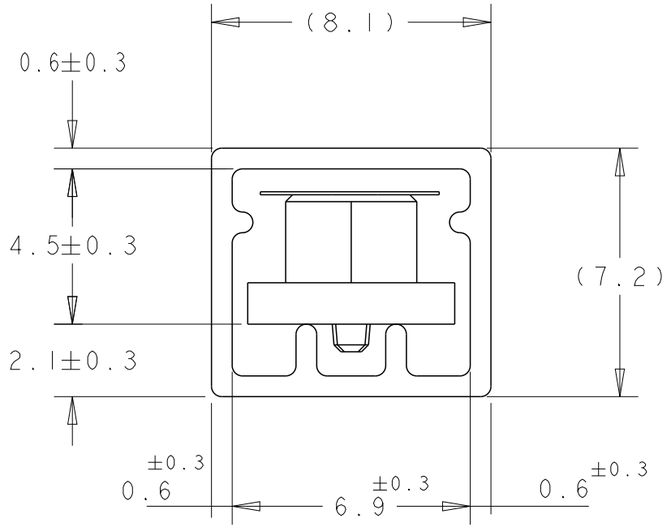

DETAIL A

WITH POLYIMIDE COVER

LOW HALOGEN

7	2	7	60.2	61.8	55.2	140	9-5177983-6
	FINISH	QTY	C	B	A	POS	CONN P/N

THIS DRAWING IS A CONTROLLED DOCUMENT.

DIMENSIONS: mm

TOLERANCES UNLESS OTHERWISE SPECIFIED:

0 PLC	±-
1 PLC	±0.3
2 PLC	±0.25
3 PLC	±0.2
4 PLC	±
ANGLES	±3°

MATERIAL

FINISH

DWN SK LEAW 17MAY2004
CHK ERIC TNG
APVD SF LEONG
PRODUCT SPEC 108-5390
APPLICATION SPEC 114-5254
WEIGHT

TE Connectivity

NAME RECEPTACLE ASSEMBLY 5H TYPE (0.5 BOSS LENGTH) FOR FH0.8MM PITCH B-T-B CONNECTOR

SIZE	CAGE CODE	DRAWING NO	RESTRICTED TO
A3	-	C-5177983	

CUSTOMER DRAWING | SCALE 4:1 | SHEET 3 OF 3 | REV C2

1470-19 (3/13)