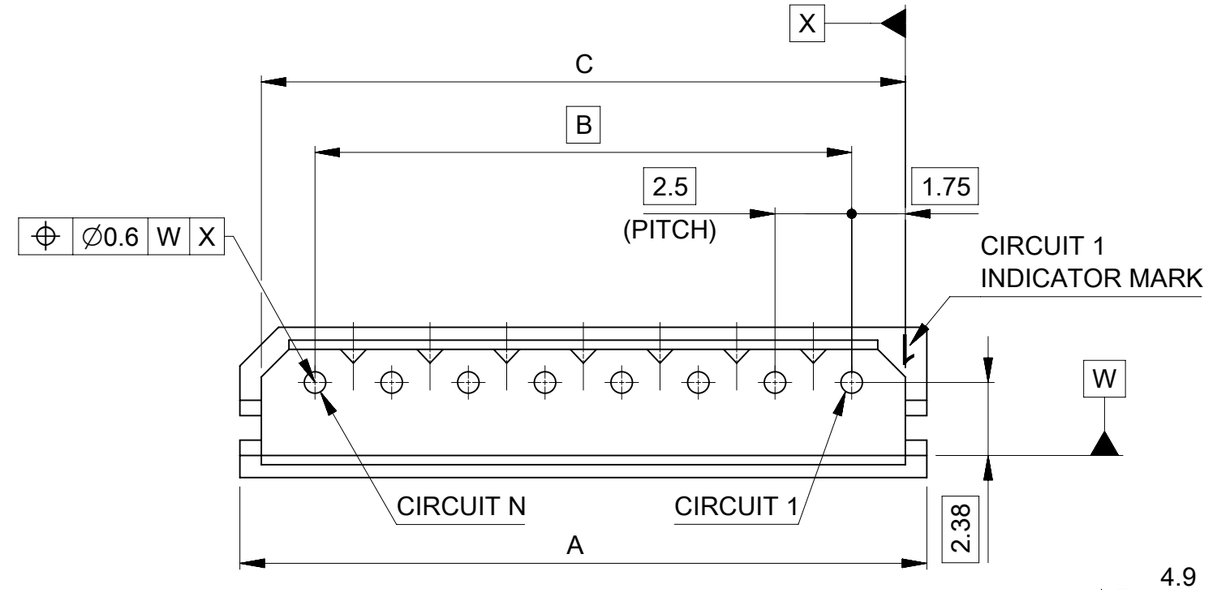

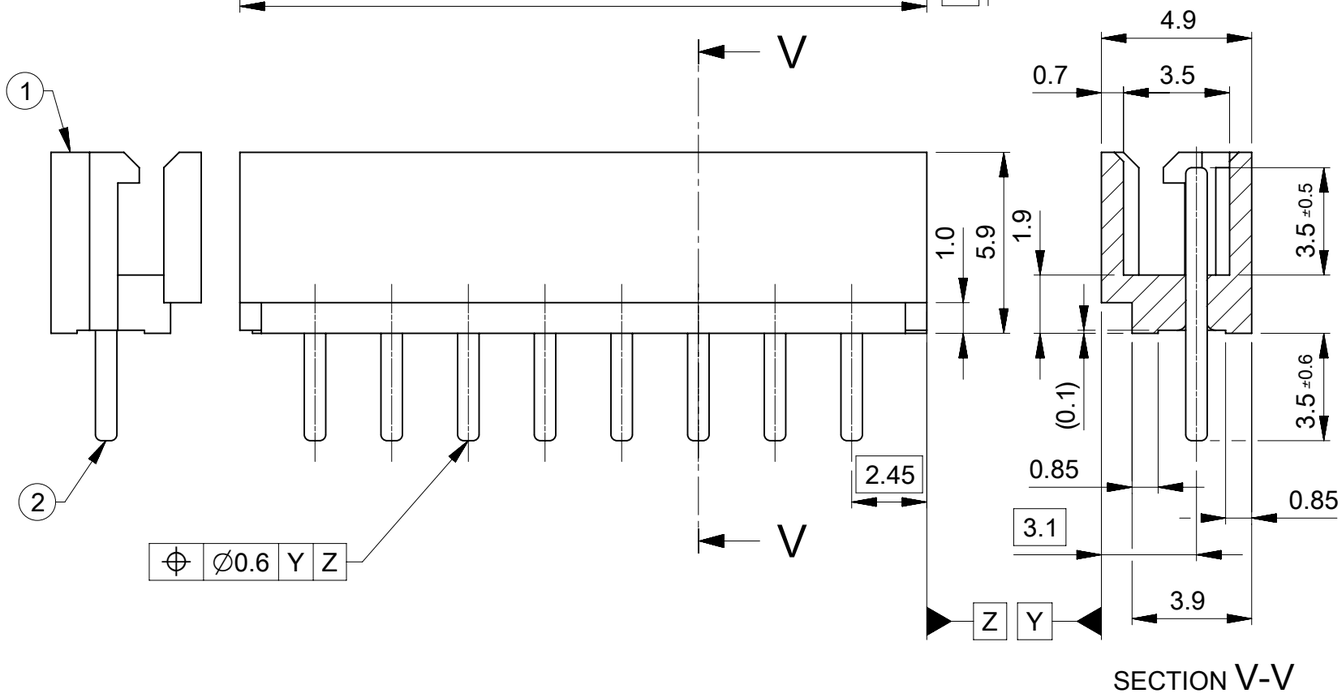

注記：
NOTES:

△1 材質：TABLE 1参照
MATERIAL : SEE TABLE 1

△2 梱包仕様書、製品仕様書、嵌合相手はSHEET 2をご参照ください。
PLEASE REFER TO SHEET 2 FOR PACKAGING SPECIFICATION, PRODUCT SPECIFICATION AND MATE WITH.

3. 本製品はコインなし品である。
コインあり品は52670002-SD/PSD/000をご参照ください。
THIS PRODUCT IS WITHOUT COIN.
PLEASE REFER TO 52670002-SD/PSD/000 FOR WITH COIN PRODUCT.

△4 発注番号：ORDER NO.
22035**5
極数
CIRCUIT SIZE

C	B	A	梱包形態 PACKAGING	シリーズ番号 SERIES NO.	ENG. NO.	△4 発注番号 ORDER NO.	極数 CIRCUIT SIZE
38.5±0.3	35	39.9±0.3	ポリ袋 POLY BAG	5267NA	526715A	22035155	15
36±0.3	32.5	37.4±0.3			526714A	22035145	14
31±0.3	27.5	32.4±0.3			526712A	22035125	12
28.5±0.25	25	29.9±0.25			526711A	22035115	11
26±0.25	22.5	27.4±0.25			526710A	22035105	10
23.5±0.25	20	24.9±0.25			526709A	22035095	9
21±0.25	17.5	22.4±0.25			526708A	22035085	8
18.5±0.25	15	19.9±0.25			526708A	22035075	7
16±0.25	12.5	17.4±0.25			526706A	22035065	6
13.5±0.25	10	14.9±0.25			526705A	22035055	5
11±0.25	7.5	12.4±0.25			526704A	22035045	4
8.5±0.2	5	9.9±0.2			526703A	22035035	3
6±0.2	2.5	7.4±0.2			526702A	22035025	2

△1 TABLE 1

番号 NO.	部品 PART	材質 MATERIAL	
1	ハウジング HOUSING	ポリアミド(PA), UL94V-0, 色: ナチュラル(白) POLYAMIDE(PA), UL94V-0, COLOR: NATURAL (WHITE)	
2	ピン PIN	母材 BASE METAL	黄銅 (∅0.7) BRASS (∅0.7)
		めっき PLATING	錫めっき：3 MICROMETER MIN. TIN
		下地めっき UNDERPLATING	銅めっき：1 MICROMETER MIN. COPPER (UNDERPLATING)

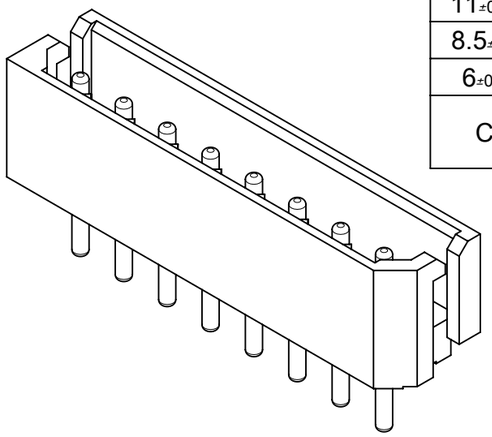

THIS DRAWING CONTAINS INFORMATION THAT IS PROPRIETARY TO MOLEX ELECTRONIC TECHNOLOGIES, LLC AND SHOULD NOT BE USED WITHOUT WRITTEN PERMISSION

DIMENSION UNITS	SCALE
mm	NTS

GENERAL TOLERANCES (UNLESS SPECIFIED)

ANGULAR TOL	±	3.0 °
4 PLACES	±	
3 PLACES	±	
2 PLACES	±	0.2
1 PLACE	±	0.2
0 PLACES	±	

DRAFT WHERE APPLICABLE MUST REMAIN WITHIN DIMENSIONS

CURRENT REV DESC: REMOVED OBSOLETED PART NUMBERS AS PER PCN#516585

EC NO: 823299
DRWN: VISHAH2 2025/05/21
CHK'D: GGA 2025/05/29
APPR: GGA 2025/05/29

INITIAL REVISION:
DRWN: SUDAYGUNAGI 2019/06/18
APPR: KOMURAKAMI 2020/05/13

molex

MINI-SPOX 2.5 W/B
VERTICAL PLUG ASSEMBLY WITHOUT COIN
COPPER UNDERPLATING

PRODUCT CUSTOMER DRAWING

THIRD ANGLE PROJECTION	DRAWING	SERIES	MATERIAL NUMBER	CUSTOMER	SHEET NUMBER
	A3-SIZE	5267	SEE CHART	GENERAL	1 OF 2

DOCUMENT NUMBER	DOC TYPE	DOC PART	REVISION
52670001-SD	PSD	000	B1

DOCUMENT STATUS	P1	RELEASE DATE	2025/05/29 13:28:19

FORMAT: master-tb-prod-A3
REVISION: J1
DATE: 2021/05/01

△2 適用製品及び各種仕様書
APPLICABLE PRODUCTS AND VARIOUS SPECIFICATIONS

梱包仕様書 PACKAGING SPECIFICATION	ORDER NO.	SPECIFICATION NO.
	22035**5	SPK-5267-001 PS 001

嵌合相手 MATE WITH	RECEPTACLE HOUSING
シリーズ番号 SERIES NO.	5264N
製品仕様書 PRODUCT SPECIFICATION	PS-5264-001 PS 001

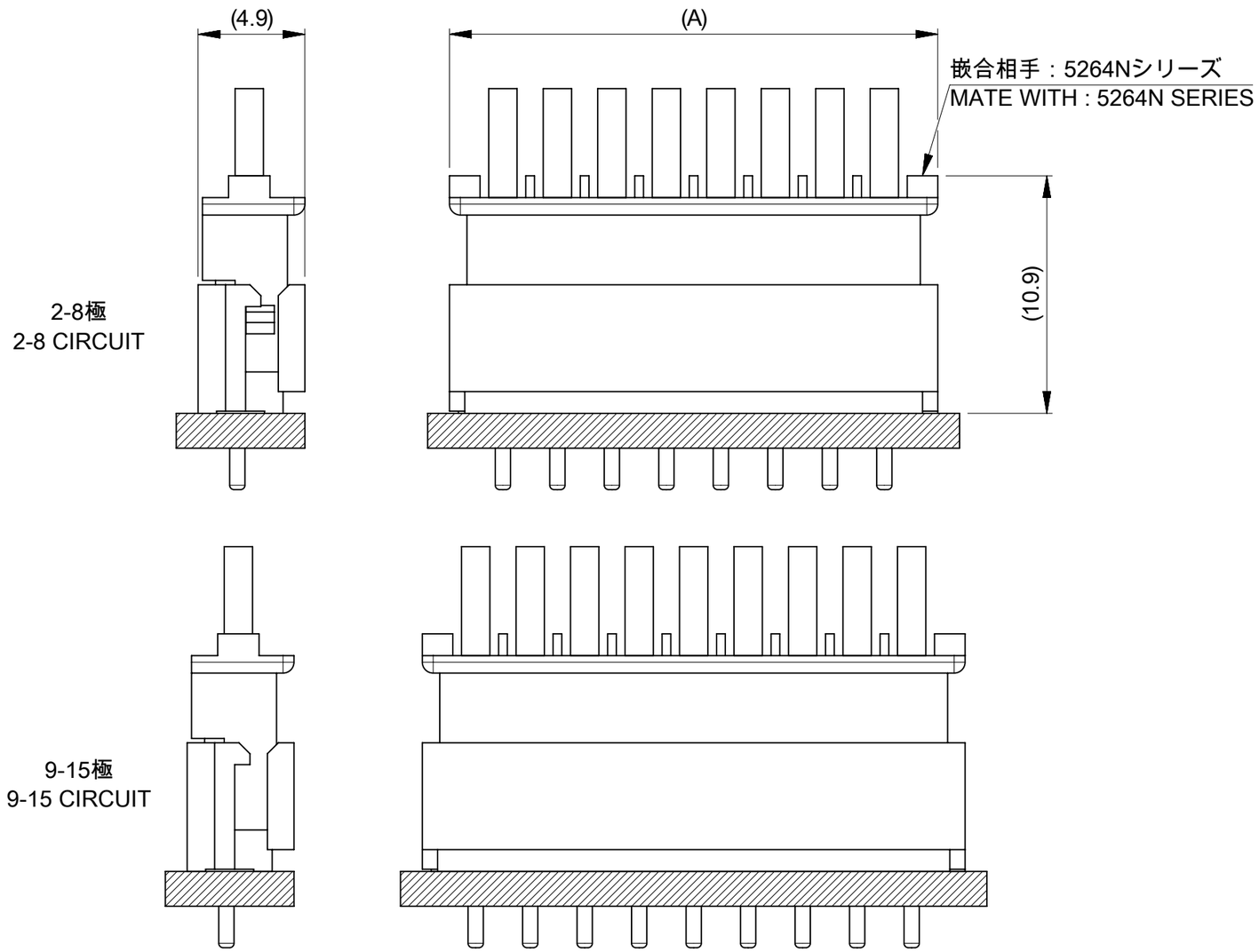

嵌合図
MATING CONNECTORS

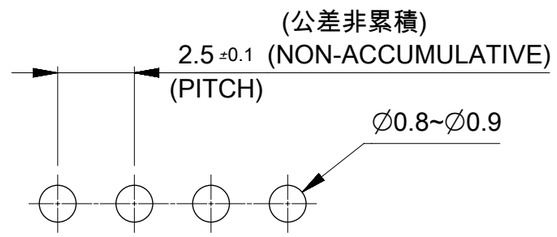

基板取付穴推奨寸法
RECOMMENDED PCB HOLE DIMENSION
(t=1.6)

THIS DRAWING CONTAINS INFORMATION THAT IS PROPRIETARY TO MOLEX ELECTRONIC TECHNOLOGIES, LLC AND SHOULD NOT BE USED WITHOUT WRITTEN PERMISSION

DIMENSION UNITS	SCALE
mm	NTS

GENERAL TOLERANCES (UNLESS SPECIFIED)

ANGULAR TOL	±	3.0 °
4 PLACES	±	
3 PLACES	±	
2 PLACES	±	0.2
1 PLACE	±	0.2
0 PLACES	±	

DRAFT WHERE APPLICABLE MUST REMAIN WITHIN DIMENSIONS

CURRENT REV DESC: REMOVED OBSOLETED PART NUMBERS AS PER PCN#516585

EC NO: 823299
DRWN: VISHAH2 2025/05/21
CHK'D: GGA 2025/05/29
APPR: GGA 2025/05/29

INITIAL REVISION:
DRWN: SUDAYGUNAGI 2019/06/18
APPR: KOMURAKAMI 2020/05/13

molex

MINI-SPOX 2.5 W/B
VERTICAL PLUG ASSEMBLY WITHOUT COIN
COPPER UNDERPLATING

PRODUCT CUSTOMER DRAWING

DOCUMENT NUMBER	DOC TYPE	DOC PART	REVISION
52670001-SD	PSD	000	B1

THIRD ANGLE PROJECTION	DRAWING	SERIES	MATERIAL NUMBER	CUSTOMER	SHEET NUMBER
	A3-SIZE	5267	SEE SHEET 1	GENERAL	2 OF 2

DOCUMENT STATUS	P1	RELEASE DATE	2025/05/29 13:28:19

FORMAT: master-tb-prod-A3
REVISION: J1
DATE: 2021/05/01