DATE	REV	ECN	APP'D. BY
2-29-16	A8	10572	TRM
8-15-16	A9	10742	TRM
7-11-23	B0	12208	JE
3-10-25	B1	12518	JE

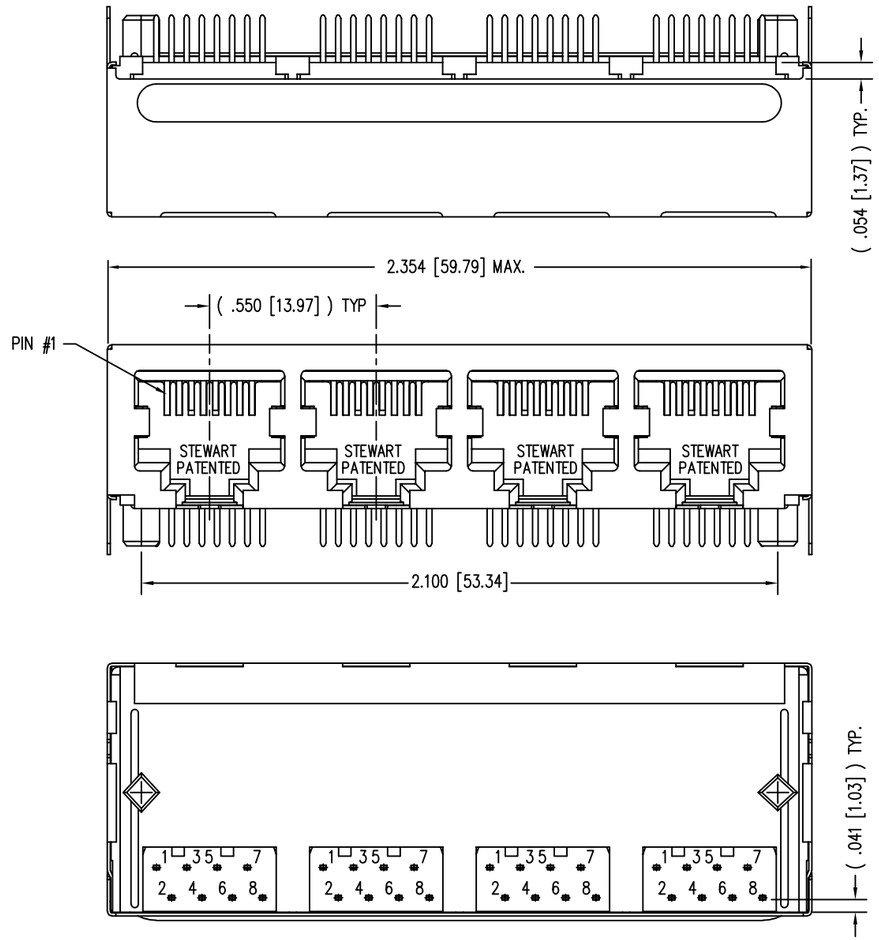

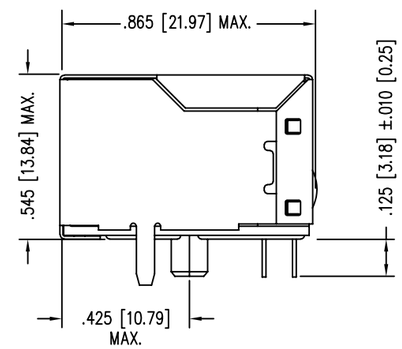

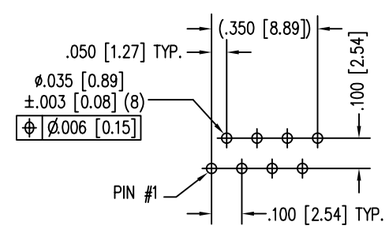

DETAIL "A"
TYPICAL HOLE LAYOUT

NOTES:

1. CONNECTOR MATERIALS:
   HOUSING: THERMOPLASTIC UL94 V-0
   CONTACTS/SHIELD: COPPER ALLOY
   SHIELD PLATING: NICKEL OR TIN
   CONTACT PLATING: SELECTIVE GOLD IN CONTACT AREA
   SEE CHART FOR PART NUMBER
2. FOR PRODUCT SPECIFICATIONS SEE PR022-01.
3. DIMENSIONS AND TOLERANCES COMPLY WITH FCC/CFR 47, PART 68.
4. DESIGNED FOR CATEGORY 5/5e APPLICATIONS.

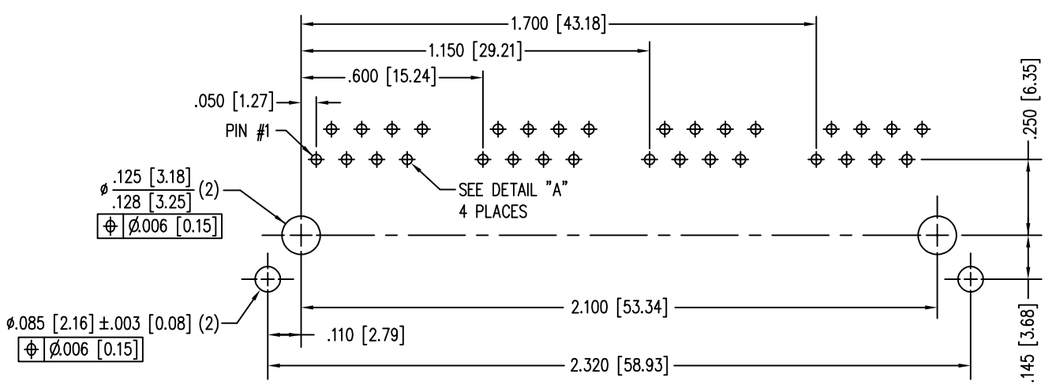

P.C.B. RECOMMENDED HOLE LAYOUT
SEEN FROM COMPONENT SIDE

ALL CENTERLINE DIMENSIONS ARE BASIC.

30 MICRO-INCHES [0.76um]	SS-718804S-A-NF
CONTACT PLATING IN MATING AREA	PART NUMBER

THIRD ANGLE PROJECTION

RoHS

stewart CONNECTOR a bel group

11118 Susquehanna Trail South
Glen Rock, PA 17327-9199
(717) 235-7512
http://www.stewartconnector.com

DO NOT SCALE DRAWING
DRAWING IS SUBJECT TO CHANGE WITHOUT NOTICE
DIMENSIONS: INCHES [METRIC]
UNLESS OTHERWISE SPECIFIED TOLERANCES ARE ±.005 [0.13] ANGLES ARE ± 1°
SHEET NO. 1 OF 1

TITLE: EMI-RFI ONE PIECE SHIELDED, ESD GROUNDED 4 PORT PCB HARMONICA CAT 5/5e JACK PAC, NON-FLANGED

THIS DRAWING AND THE SUBJECT MATTER SHOWN THEREON ARE CONFIDENTIAL AND THE PROPRIETARY PROPERTY OF STEWART CONNECTOR AND SHALL NOT BE REPRODUCED, COPIED, OR USED IN ANY MANNER WITHOUT PRIOR WRITTEN CONSENT OF STEWART CONNECTOR. ONE OR MORE U.S. PATENTS MAY APPLY TO THIS PRODUCT. FOR DETAILS, PLEASE VISIT: HTTP://BELFUSE.COM/STEWART/STEWART_PATENTS/

DRN BY:	KRL	DATE	3/20/06
APPD BY:	SAW	DATE	3-21-06
DWG NO.	CT710011	REV.	B1

Please read our datasheet & drawing disclaimer here.

AutoCAD