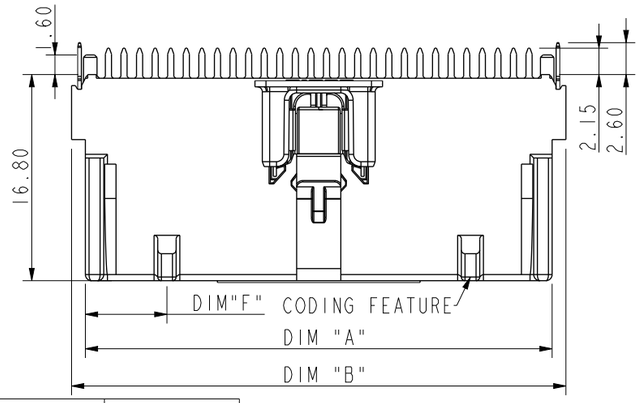

CODING	DIM "F"
A	6.65
B	6.15
C	5.65
D	7.15

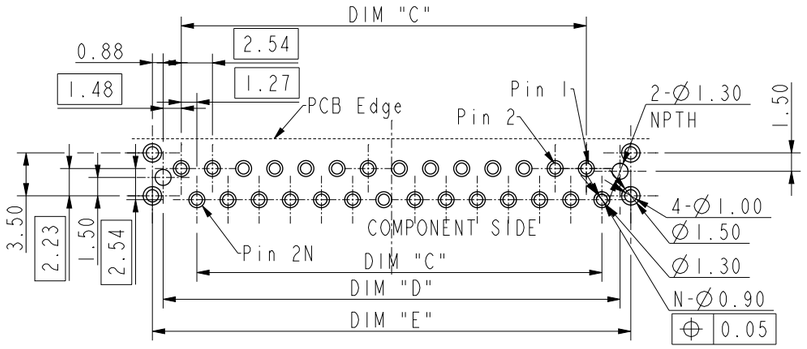

LAYOUT RECOMMENDED
TOLERANCE:±0.05

PIN NUMBER	DIM "A"	DIM "B"	DIM "C"	DIM "D"	DIM "E"
36 Pin	48.21	50.46	43.18	47.41	49.16
34 Pin	45.67	47.92	40.64	44.87	46.62
32 Pin	43.13	45.38	38.10	42.33	44.08
30 Pin	40.59	42.84	35.56	39.79	41.54
28 Pin	38.05	40.3	33.02	37.25	39.00
26 Pin	35.51	37.76	30.48	34.71	36.46
24 Pin	32.97	35.22	27.94	32.17	33.92
22 Pin	30.43	32.68	25.4	29.63	31.38
20 Pin	27.89	30.14	22.86	27.09	28.84
18 Pin	25.35	27.6	20.32	24.55	26.3
16 Pin	22.81	25.06	17.78	22.01	23.76
14 Pin	20.27	22.52	15.24	19.47	21.22
12 Pin	17.73	19.98	12.7	16.93	18.68
10 Pin	15.19	17.44	10.16	14.39	16.14

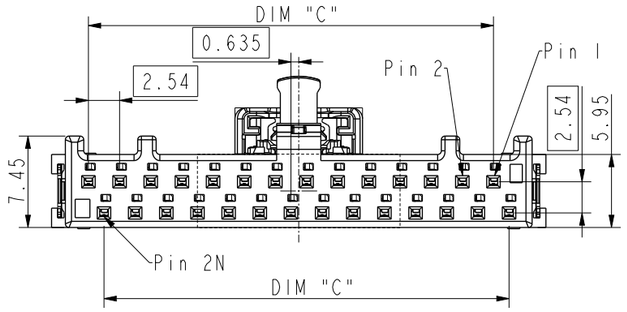

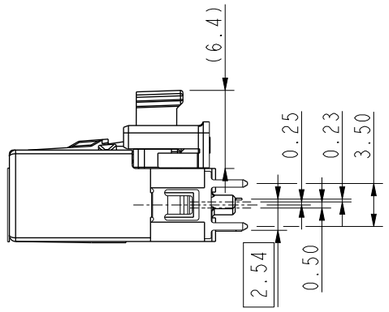

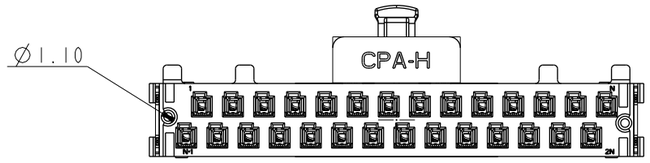

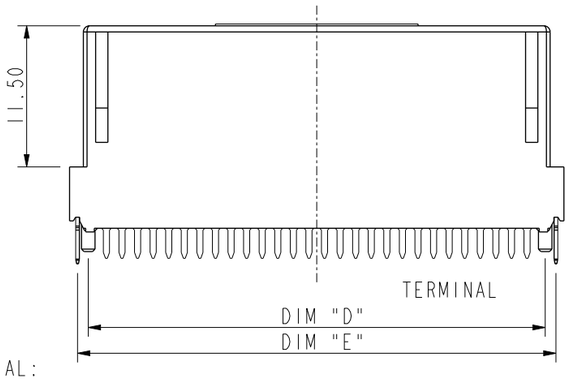

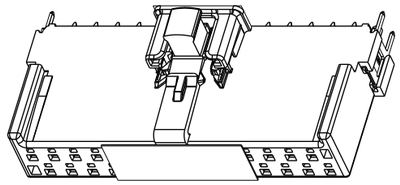

NO CODING FEATURE

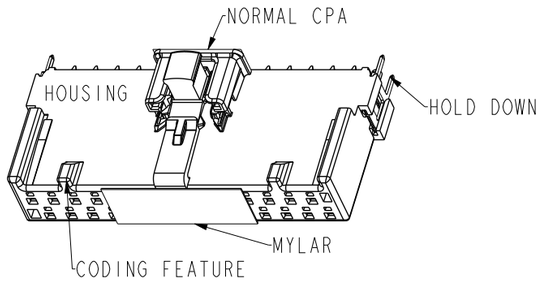

PART NUMBER SCHEME
10161735- XXXXXLF

V:STANDARD
N:LV214 S3
_:FOR CUSTOMER CODE

PIN NUMBER
36- 36 PIN
~~~
32- 32 PIN
30- 30 PIN
28- 28 PIN
~~~
10- 10 PIN

CONTACT AREA PLATING
1. 8u" GXT OR GOLD
2. 40u"TIN

LEAD FREE

CODING OPTIONAL(SEE NOTES 7)
1:NO CODING FEATURE (BLACK)
2:GREEN(RAL6002)
3:WHITE(RAL9001)
4:BORDEAUX (RAL4004)
A:WITH CODING FEATURE CODING A BLACK
B:CODING B GREEN (RAL6002)
C:CODING C WHITE (RAL9001)
D:CODING D BORDEAUX (RAL4004)

CPA OPTIONAL
0: WITHOUT
1: WITH

REGISTRATION MYLAR
0: WITHOUT
1: WITH

NOTES:
1.MATERIAL:
1.1 HOUSING AND CPA: THERMOPLASTIC
1.2 TERMINAL AND HOLD DOWN: COPPER ALLOY
2.PLATING: 1-3μm NI UNDER PLATING;
2.1 CONTACT AREA: ACCORDING TO PART NUMBER;
2.2 SOLDER TAIL: TIN PLATING.
3.PRODUCT SPEC GX-12-1679.
4.THIS HOUSIONG WILL WITHSTAND EXPOSURE TO 260°C PEAK TEMPERATURE FOR 20 SECONDS IN A IR REFLOW SOLDERING APPLICATION.
5.THIS PRODUCT MEETS EUazROPEAN UNION DIRECTIVES AND OTHER COUNTRYREGULATIONS AS DESCRIBED IN GS-47-0004..
6.VT 10161735 CAN MATE WITH RA 10158557 OR VT 10161734
7.CODING FEATURE CAN BE OFFERED FOR 20-36PIN AND NO CODING FEATURE FOR 10-18P AND CODING ABC FOR 20PIN & CODING ABCD FOR 22-36PIN.
8.THE PRODUCT CAN SUPPORT OPERATING VOLTAGE 100V BASE ON POLLUTION DEGREE 2

spec ref			dr	Li-Qing Lei	2021/06/28	projection	mm
tolerance std	TOLERANCES UNLESS OTHERWISE SPECIFIED		eng	Li-Qing Lei	2024/03/15		
			chr	-	-		
			appr	Tim Yao	2024/03/18	product family	
surface	linear	0.X	±0.5				
		0.XX	±0.25				
		0.XXX	±0.10				
	angular	0°	±2°				

size A3 | scale 2:1 | ecn no ELX-N-50922-1 | rel level: Released

Amphenol FCi

title: RECEPTACLE VT
FlexLock 2.54mm Pitch Connector

dwg no: 10161735c | rev E

cat. no. | Product - Customer Drw | sheet 1 of 1

Creo File:ELX-WC-A3C,REV F,2020-12-21

© 2020 Amphenol Corporation