molex

MX150 RECEPTACLE 2X8 SEALED ASSEMBLY MAT SEAL
BOM AND PIN OUT SHEET

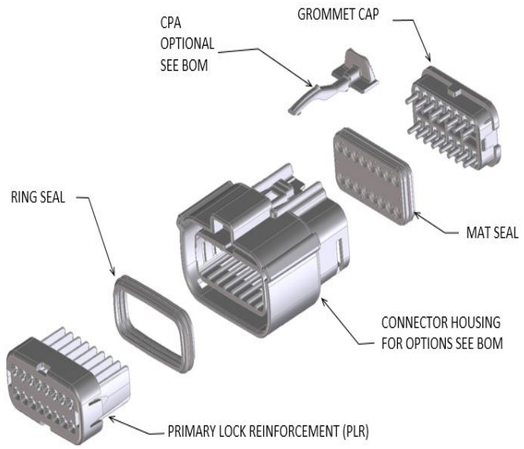

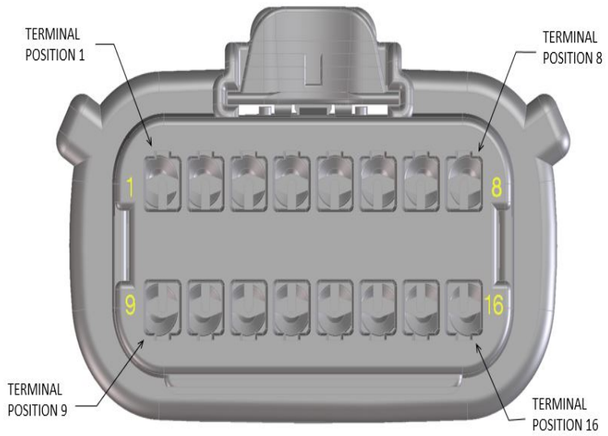

ABBREVIATION	DESCRIPTION	COLOR	MATERIAL
A-BLACK	HOUSING, KEYING OPTION A	BLACK	SPS/NYLON GF20
B-LIGHT GRAY	HOUSING, KEYING OPTION B	LIGHT GRAY	SPS/NYLON GF20
C-BROWN	HOUSING, KEYING OPTION C	BROWN	SPS/NYLON GF20
D-GREEN	HOUSING, KEYING OPTION D	GREEN	SPS/NYLON GF20
C-DARK GRAY	HOUSING, KEYING OPTION C	DARK GRAY	SPS/NYLON GF20
D-STONE GRAY	HOUSING, KEYING OPTION D	STONE GRAY	SPS/NYLON GF20
A-YELLOW	HOUSING, KEYING OPTION A	YELLOW	SPS/NYLON GF20
A-BLACK-CLIP	HOUSING, KEYING OPTION A WITH CLIPSLOT	BLACK	SPS/NYLON GF20
B-LIGHT GRAY-CLIP	HOUSING, KEYING OPTION B WITH CLIPSLOT	LIGHT GRAY	SPS/NYLON GF20
C-DARK GRAY-CLIP	HOUSING, KEYING OPTION C WITH CLIPSLOT	DARK GRAY	SPS/NYLON GF20
D-STONE GRAY-CLIP	HOUSING, KEYING OPTION D WITH CLIPSLOT	STONE GRAY	SPS/NYLON GF20
GCO	GROMMET CAP (OPEN)	BLACK	SPS/NYLON GF20
GCP	GROMMET CAP (PLUGGED)	BLACK	SPS/NYLON GF20
PLR	PLR	NATURAL	SPS/NYLON GF20
CPA	CPA	RED	PBT GF30
M	MAT SEAL	LIGHT BLUE	INHERENTLY LUBRICATED SILICONE
R	RING SEAL	GREEN	INHERENTLY LUBRICATED SILICONE

FOR ADDITIONAL INFORMATION SEE SD-33472-0001

ASSEMBLY DESCRIPTION	ASSEMBLY PART NUMBER	COMPONENT						BLOCKED TERMINALS								STATUS	COMMENT	OPTIONAL ATTACHMENTS SOLD SEPARATELY			
		THE PRESENCE OF AN ABBREVIATION INDICATES THE PRESENCE OF THAT COMPONENT						CAVITY WITH A NUMBER INDICATES BLOCKED TERMINAL POSITION CAVITY WITHOUT A NUMBER INDICATES OPEN TERMINAL POSITION													
		HOUSING KEY/COLOR	GROMMET CAP	PLR	CPA	MAT SEAL	RING SEAL											BACKSHELL WITH RIBS	BACKSHELL WITHOUT RIBS	90^0 ADAPTOR WITH RIBS	90^0 ADAPTOR WITHOUT RIBS
MX150 ASSY RCP 2X8 BK A/16	334721601	A-BLACK	GCO	PLR		M	R	-	-	-	-	-	-	-	-	SALEABLE		N/A	N/A	N/A	N/A
								-	-	-	-	-	-	-	-						
MX150 ASSY RCP 2X8 LG B/16	334721602	B-LIGHT GRAY	GCO	PLR		M	R	-	-	-	-	-	-	-	-	SALEABLE		N/A	N/A	N/A	N/A
								-	-	-	-	-	-	-	-						
MX150 ASSY RCP 2X8 BR C/16	334721603	C-BROWN	GCO	PLR		M	R	-	-	-	-	-	-	-	-	NOT RECOMMENDED	SEE 334721767	N/A	N/A	N/A	N/A
								-	-	-	-	-	-	-	-						
MX150 ASSY RCP 2X8 GR D/16	334721604	D-GREEN	GCO	PLR		M	R	-	-	-	-	-	-	-	-	NOT RECOMMENDED	SEE 334721768	N/A	N/A	N/A	N/A
								-	-	-	-	-	-	-	-						
MX150 ASSY RCP 2X8 CPA BK A/16	334721606	A-BLACK	GCO	PLR	CPA	M	R	-	-	-	-	-	-	-	-	SALEABLE		N/A	N/A	N/A	N/A
								-	-	-	-	-	-	-	-						
MX150 ASSY RCP 2X8 CPA LG B/16	334721607	B-LIGHT GRAY	GCO	PLR	CPA	M	R	-	-	-	-	-	-	-	-	SALEABLE		N/A	N/A	N/A	N/A
								-	-	-	-	-	-	-	-						
MX150 ASSY RCP 2X8 CPA BR C/16	334721608	C-BROWN	GCO	PLR	CPA	M	R	-	-	-	-	-	-	-	-	NOT RECOMMENDED	SEE 334721769	N/A	N/A	N/A	N/A
								-	-	-	-	-	-	-	-						
MX150 ASSY RCP 2X8 CPA GR D/16	334721609	D-GREEN	GCO	PLR	CPA	M	R	-	-	-	-	-	-	-	-	NOT RECOMMENDED	SEE 334721770	N/A	N/A	N/A	N/A
								-	-	-	-	-	-	-	-						
MX150 ASSY RCP 2X8 BK A/15	334721611	A-BLACK	GCP	PLR		M	R	-	-	-	-	-	-	-	8	SALEABLE		N/A	N/A	N/A	N/A
								-	-	-	-	-	-	-	-						
MX150 ASSY RCP 2X8 LG B/15	334721612	B-LIGHT GRAY	GCP	PLR		M	R	-	-	-	-	-	-	-	8	SALEABLE		N/A	N/A	N/A	N/A
								-	-	-	-	-	-	-	-						
MX150 ASSY RCP 2X8 BR C/15	334721613	C-BROWN	GCP	PLR		M	R	-	-	-	-	-	-	-	8	NOT RECOMMENDED		N/A	N/A	N/A	N/A
								-	-	-	-	-	-	-	-						
MX150 ASSY RCP 2X8 GR D/15	334721614	D-GREEN	GCP	PLR		M	R	-	-	-	-	-	-	-	8	NOT RECOMMENDED		N/A	N/A	N/A	N/A
								-	-	-	-	-	-	-	-						
MX150 ASSY RCP 2X8 CPA BK A/15	334721616	A-BLACK	GCP	PLR	CPA	M	R	-	-	-	-	-	-	-	8	SALEABLE		N/A	N/A	N/A	N/A
								-	-	-	-	-	-	-	-						
MX150 ASSY RCP 2X8 CPA LG B/15	334721617	B-LIGHT GRAY	GCP	PLR	CPA	M	R	-	-	-	-	-	-	-	8	SALEABLE		N/A	N/A	N/A	N/A
								-	-	-	-	-	-	-	-						
MX150 ASSY RCP 2X8 CPA BR C/15	334721618	C-BROWN	GCP	PLR	CPA	M	R	-	-	-	-	-	-	-	8	NOT RECOMMENDED		N/A	N/A	N/A	N/A
								-	-	-	-	-	-	-	-						
MX150 ASSY RCP 2X8 CPA GR D/15	334721619	D-GREEN	GCP	PLR	CPA	M	R	-	-	-	-	-	-	-	8	NOT RECOMMENDED		N/A	N/A	N/A	N/A
								-	-	-	-	-	-	-	-						

molex

MX150 RECEPTACLE 2X8 SEALED ASSEMBLY MAT SEAL
BOM AND PIN OUT SHEET

ASSEMBLY DESCRIPTION	ASSEMBLY PART NUMBER	COMPONENT THE PRESENCE OF AN ABBREVIATION INDICATES THE PRESENCE OF THAT COMPONENT						BLOCKED TERMINALS CAVITY WITH A NUMBER INDICATES BLOCKED TERMINAL POSITION CAVITY WITHOUT A NUMBER INDICATES OPEN TERMINAL POSITION								STATUS	COMMENT	OPTIONAL ATTACHMENTS SOLD SEPARATELY			
		HOUSING KEY/COLOR	GROMMET CAP	PLR	CPA	MAT SEAL	RING SEAL											BACKSHELL WITH RIBS	BACKSHELL WITHOUT RIBS	90^0 ADAPTOR WITH RIBS	90^0 ADAPTOR WITHOUT RIBS
MX150 ASSY RCP 2X8 BK A/0	334721621	A-BLACK	GCP	PLR		M	R	1	2	3	4	5	6	7	8	SALEABLE		N/A	N/A	N/A	N/A
								9	10	11	12	13	14	15	16						
MX150 ASSY RCP 2X8 LG B/0	334721622	B-LIGHT GRAY	GCP	PLR		M	R	1	2	3	4	5	6	7	8	SALEABLE		N/A	N/A	N/A	N/A
								9	10	11	12	13	14	15	16						
MX150 ASSY RCP 2X8 BR C/0	334721623	C-BROWN	GCP	PLR		M	R	1	2	3	4	5	6	7	8	NOT RECOMMENDED		N/A	N/A	N/A	N/A
								9	10	11	12	13	14	15	16						
MX150 ASSY RCP 2X8 GR D/0	334721624	D-GREEN	GCP	PLR		M	R	1	2	3	4	5	6	7	8	NOT RECOMMENDED		N/A	N/A	N/A	N/A
								9	10	11	12	13	14	15	16						
MX150 ASSY RCP 2X8 CPA BK A/0	334721626	A-BLACK	GCP	PLR	CPA	M	R	1	2	3	4	5	6	7	8	SALEABLE		N/A	N/A	N/A	N/A
								9	10	11	12	13	14	15	16						
MX150 ASSY RCP 2X8 CPA LG B/0	334721627	B-LIGHT GRAY	GCP	PLR	CPA	M	R	1	2	3	4	5	6	7	8	SALEABLE		N/A	N/A	N/A	N/A
								9	10	11	12	13	14	15	16						
MX150 ASSY RCP 2X8 CPA BR C/0	334721628	C-BROWN	GCP	PLR	CPA	M	R	1	2	3	4	5	6	7	8	NOT RECOMMENDED		N/A	N/A	N/A	N/A
								9	10	11	12	13	14	15	16						
MX150 ASSY RCP 2X8 CPA GR D/0	334721629	D-GREEN	GCP	PLR	CPA	M	R	1	2	3	4	5	6	7	8	NOT RECOMMENDED		N/A	N/A	N/A	N/A
								9	10	11	12	13	14	15	16						
MX150 ASSY RCP 2X8 BK A/14	334721631	A-BLACK	GCP	PLR		M	R	-	-	-	-	-	-	-	8	SALEABLE		N/A	N/A	N/A	N/A
								9	-	-	-	-	-	-	-						
MX150 ASSY RCP 2X8 LG B/14	334721632	B-LIGHT GRAY	GCP	PLR		M	R	-	-	-	-	-	-	-	8	SALEABLE		N/A	N/A	N/A	N/A
								9	-	-	-	-	-	-	-						
MX150 ASSY RCP 2X8 BR C/14	334721633	C-BROWN	GCP	PLR		M	R	-	-	-	-	-	-	-	8	NOT RECOMMENDED		N/A	N/A	N/A	N/A
								9	-	-	-	-	-	-	-						
MX150 ASSY RCP 2X8 GR D/14	334721634	D-GREEN	GCP	PLR		M	R	-	-	-	-	-	-	-	8	NOT RECOMMENDED		N/A	N/A	N/A	N/A
								9	-	-	-	-	-	-	-						
MX150 ASSY RCP 2X8 CPA BK A/14	334721636	A-BLACK	GCP	PLR	CPA	M	R	-	-	-	-	-	-	-	8	SALEABLE		N/A	N/A	N/A	N/A
								9	-	-	-	-	-	-	-						
MX150 ASSY RCP 2X8 CPA LG B/14	334721637	B-LIGHT GRAY	GCP	PLR	CPA	M	R	-	-	-	-	-	-	-	8	SALEABLE		N/A	N/A	N/A	N/A
								9	-	-	-	-	-	-	-						
MX150 ASSY RCP 2X8 CPA BR C/14	334721638	C-BROWN	GCP	PLR	CPA	M	R	-	-	-	-	-	-	-	8	NOT RECOMMENDED		N/A	N/A	N/A	N/A
								9	-	-	-	-	-	-	-						
MX150 ASSY RCP 2X8 CPA GR D/14	334721639	D-GREEN	GCP	PLR	CPA	M	R	-	-	-	-	-	-	-	8	NOT RECOMMENDED		N/A	N/A	N/A	N/A
								9	-	-	-	-	-	-	-						
MX150 ASSY RCP 2X8 BK A/13	334721641	A-BLACK	GCP	PLR		M	R	1	-	-	-	-	-	-	8	SALEABLE		N/A	N/A	N/A	N/A
								9	-	-	-	-	-	-	-						
MX150 ASSY RCP 2X8 LG B/13	334721642	B-LIGHT GRAY	GCP	PLR		M	R	1	-	-	-	-	-	-	8	SALEABLE		N/A	N/A	N/A	N/A
								9	-	-	-	-	-	-	-						
MX150 ASSY RCP 2X8 BR C/13	334721643	C-BROWN	GCP	PLR		M	R	1	-	-	-	-	-	-	8	NOT RECOMMENDED		N/A	N/A	N/A	N/A
								9	-	-	-	-	-	-	-						
MX150 ASSY RCP 2X8 GR D/13	334721644	D-GREEN	GCP	PLR		M	R	1	-	-	-	-	-	-	8	NOT RECOMMENDED		N/A	N/A	N/A	N/A
								9	-	-	-	-	-	-	-						
MX150 ASSY RCP 2X8 CPA BK A/13	334721646	A-BLACK	GCP	PLR	CPA	M	R	1	-	-	-	-	-	-	8	SALEABLE		N/A	N/A	N/A	N/A
								9	-	-	-	-	-	-	-						
MX150 ASSY RCP 2X8 CPA LG B/13	334721647	B-LIGHT GRAY	GCP	PLR	CPA	M	R	1	-	-	-	-	-	-	8	SALEABLE		N/A	N/A	N/A	N/A
								9	-	-	-	-	-	-	-						
MX150 ASSY RCP 2X8 CPA BR C/13	334721648	C-BROWN	GCP	PLR	CPA	M	R	1	-	-	-	-	-	-	8	NOT RECOMMENDED		N/A	N/A	N/A	N/A
								9	-	-	-	-	-	-	-						
MX150 ASSY RCP 2X8 CPA GR D/13	334721649	D-GREEN	GCP	PLR	CPA	M	R	1	-	-	-	-	-	-	8	NOT RECOMMENDED		N/A	N/A	N/A	N/A
								9	-	-	-	-	-	-	-						
MX150 ASSY RCP 2X8 BK A/15	334721651	A-BLACK	GCP	PLR		M	R	-	-	-	-	-	-	-	-	SALEABLE		N/A	N/A	N/A	N/A
								-	-	-	-	-	-	15	-						
MX150 ASSY RCP 2X8 CPA BK A/15	334721652	A-BLACK	GCP	PLR	CPA	M	R	-	-	-	-	-	-	-	-	SALEABLE		N/A	N/A	N/A	N/A
								-	-	-	-	-	-	15	-						
MX150 ASSY RCP 2X8 BK A/12	334721653	A-BLACK	GCP	PLR		M	R	1	-	-	-	-	-	-	8	SALEABLE		N/A	N/A	N/A	N/A
								9	-	-	-	-	-	-	16						

molex

MX150 RECEPTACLE 2X8 SEALED ASSEMBLY MAT SEAL
BOM AND PIN OUT SHEET

ASSEMBLY DESCRIPTION	ASSEMBLY PART NUMBER	COMPONENT						BLOCKED TERMINALS								STATUS	COMMENT	OPTIONAL ATTACHMENTS SOLD SEPARATELY			
		THE PRESENCE OF AN ABBREVIATION INDICATES THE PRESENCE OF THAT COMPONENT						CAVITY WITH A NUMBER INDICATES BLOCKED TERMINAL POSITION CAVITY WITHOUT A NUMBER INDICATES OPEN TERMINAL POSITION													
		HOUSING KEY/COLOR	GROMMET CAP	PLR	CPA	MAT SEAL	RING SEAL											BACKSHELL WITH RIBS	BACKSHELL WITHOUT RIBS	90^0 ADAPTOR WITH RIBS	90^0 ADAPTOR WITHOUT RIBS
MX150 ASSY RCP 2X8 LG B/12	334721654	B-LIGHT GRAY	GCP	PLR		M	R	1	-	-	-	-	-	-	8	SALEABLE		N/A	N/A	N/A	N/A
								9	-	-	-	-	-	-	16						
MX150 ASSY RCP 2X8 BR C/12	334721655	C-BROWN	GCP	PLR		M	R	1	-	-	-	-	-	-	8	NOT RECOMMENDED		N/A	N/A	N/A	N/A
								9	-	-	-	-	-	-	16						
MX150 ASSY RCP 2X8 GR D/12	334721656	D-GREEN	GCP	PLR		M	R	1	-	-	-	-	-	-	8	NOT RECOMMENDED		N/A	N/A	N/A	N/A
								9	-	-	-	-	-	-	16						
MX150 ASSY RCP 2X8 CPA BK A/12	334721658	A-BLACK	GCP	PLR	CPA	M	R	1	-	-	-	-	-	-	8	SALEABLE		N/A	N/A	N/A	N/A
								9	-	-	-	-	-	-	16						
MX150 ASSY RCP 2X8 CPA LG B/12	334721659	B-LIGHT GRAY	GCP	PLR	CPA	M	R	1	-	-	-	-	-	-	8	SALEABLE		N/A	N/A	N/A	N/A
								9	-	-	-	-	-	-	16						
MX150 ASSY RCP 2X8 CPA BR C/12	334721660	C-BROWN	GCP	PLR	CPA	M	R	1	-	-	-	-	-	-	8	NOT RECOMMENDED		N/A	N/A	N/A	N/A
								9	-	-	-	-	-	-	16						
MX150 ASSY RCP 2X8 CPA GR D/12	334721661	D-GREEN	GCP	PLR	CPA	M	R	1	-	-	-	-	-	-	8	NOT RECOMMENDED		N/A	N/A	N/A	N/A
								9	-	-	-	-	-	-	16						
MX150 ASSY RCP 2X8 BK A/7	334721663	A-BLACK	GCP	PLR		M	R	1	-	-	4	-	6	7	8	SALEABLE		N/A	N/A	N/A	N/A
								9	-	-	12	13	14	-	-						
MX150 ASSY RCP 2X8 BK A/4	334721664	A-BLACK	GCP	PLR		M	R	-	-	3	4	5	-	7	-	SALEABLE		N/A	N/A	N/A	N/A
								9	10	11	12	13	14	15	16						
MX150 ASSY RCP 2X8 BK A/10	334721665	A-BLACK	GCP	PLR		M	R	-	-	-	-	-	-	7	8	SALEABLE		N/A	N/A	N/A	N/A
								9	-	-	12	13	14	-	-						
MX150 ASSY RCP 2X8 BK A/6	334721666	A-BLACK	GCP	PLR		M	R	-	-	3	4	5	-	-	-	SALEABLE		N/A	N/A	N/A	N/A
								-	10	11	12	13	14	15	16						
MX150 ASSY RCP 2X8 BK A/5	334721667	A-BLACK	GCP	PLR		M	R	-	-	3	4	5	-	-	-	SALEABLE		N/A	N/A	N/A	N/A
								9	10	11	12	13	14	15	16						
MX150 ASSY RCP 2X8 BK A/14	334721668	A-BLACK	GCP	PLR		M	R	1	-	-	-	5	-	-	-	SALEABLE		N/A	N/A	N/A	N/A
								-	-	-	-	-	-	-	-						
MX150 ASSY RCP 2X8 LG B/10	334721669	B-LIGHT GRAY	GCP	PLR		M	R	-	-	-	-	-	-	-	8	SALEABLE		N/A	N/A	N/A	N/A
								-	-	-	12	13	14	15	16						
MX150 ASSY RCP 2X8 LG B/11	334721670	B-LIGHT GRAY	GCP	PLR		M	R	-	-	-	-	-	-	-	8	SALEABLE		N/A	N/A	N/A	N/A
								-	-	-	-	13	14	15	16						
MX150 ASSY RCP 2X8 LG B/14	334721671	B-LIGHT GRAY	GCP	PLR		M	R	-	-	-	-	-	-	-	-	SALEABLE		N/A	N/A	N/A	N/A
								-	10	11	-	-	-	-	-						
MX150 ASSY RCP 2X8 LG B/13	334721672	B-LIGHT GRAY	GCP	PLR		M	R	-	-	-	-	-	-	-	-	SALEABLE		N/A	N/A	N/A	N/A
								-	10	11	12	-	-	-	-						
MX150 ASSY RCP 2X8 CPA BK A/10	334721673	A-BLACK	GCP	PLR	CPA	M	R	-	-	-	-	-	-	-	-	SALEABLE		N/A	N/A	N/A	N/A
								-	10	11	-	13	14	15	16						
MX150 ASSY RCP 2X8 LG B/15	334721674	B-LIGHT GRAY	GCP	PLR		M	R	-	-	-	-	-	-	-	-	SALEABLE		N/A	N/A	N/A	N/A
								-	-	-	12	-	-	-	-						
MX150 ASSY RCP 2X8 CPA BK A/12	334721675	A-BLACK	GCP	PLR	CPA	M	R	-	-	-	-	-	-	-	-	SALEABLE		N/A	N/A	N/A	N/A
								-	10	11	-	-	-	15	16						
MX150 ASSY RCP 2X8 CPA BK A/9	334721676	A-BLACK	GCP	PLR	CPA	M	R	-	-	-	-	-	-	-	8	SALEABLE		N/A	N/A	N/A	N/A
								9	10	11	12	-	-	15	16						
MX150 ASSY RCP 2X8 LG B/10	334721677	B-LIGHT GRAY	GCP	PLR		M	R	-	-	-	4	-	6	7	8	SALEABLE		N/A	N/A	N/A	N/A
								-	-	-	12	-	14	-	-						
MX150 ASSY RCP 2X8 BK A/15	334721678	A-BLACK	GCP	PLR		M	R	-	-	-	-	5	-	-	-	SALEABLE		N/A	N/A	N/A	N/A
								-	-	-	-	-	-	-	-						
MX150 ASSY RCP 2X8 BK A/14	334721679	A-BLACK	GCP	PLR		M	R	-	-	-	-	5	-	-	-	SALEABLE		N/A	N/A	N/A	N/A
								-	-	-	-	-	-	-	16						
MX150 ASSY RCP 2X8 CPA BK A/14	334721680	A-BLACK	GCP	PLR	CPA	M	R	-	-	-	-	-	-	-	-	SALEABLE		N/A	N/A	N/A	N/A
								-	-	-	-	-	-	15	16						
MX150 ASSY RCP 2X8 BK A/11	334721681	A-BLACK	GCP	PLR		M	R	-	2	-	-	5	-	7	-	SALEABLE		N/A	N/A	N/A	N/A
								-	10	-	-	-	14	-	-						
MX150 ASSY RCP 2X8 LG B/15	334721682	B-LIGHT GRAY	GCP	PLR		M	R	-	-	-	4	-	-	-	-	SALEABLE		N/A	N/A	N/A	N/A
								-	-	-	-	-	-	-	-						

molex

MX150 RECEPTACLE 2X8 SEALED ASSEMBLY MAT SEAL
BOM AND PIN OUT SHEET

ASSEMBLY DESCRIPTION	ASSEMBLY PART NUMBER	COMPONENT: THE PRESENCE OF AN ABBREVIATION INDICATES THE PRESENCE OF THAT COMPONENT						BLOCKED TERMINALS: CAVITY WITH A NUMBER INDICATES BLOCKED TERMINAL POSITION; CAVITY WITHOUT A NUMBER INDICATES OPEN TERMINAL POSITION								STATUS	COMMENT	OPTIONAL ATTACHMENTS SOLD SEPARATELY			
		HOUSING KEY/COLOR	GROMMET CAP	PLR	CPA	MAT SEAL	RING SEAL											BACKSHELL WITH RIBS	BACKSHELL WITHOUT RIBS	90^0 ADAPTOR WITH RIBS	90^0 ADAPTOR WITHOUT RIBS
MX150 ASSY RCP 2X8 BK A/15	334721683	A-BLACK	GCP	PLR		M	R	-	-	-	-	-	-	-	-	SALEABLE		N/A	N/A	N/A	N/A
								-	-	-	-	-	-	-	16						
MX150 ASSY RCP 2X8 BK A/14	334721684	A-BLACK	GCP	PLR		M	R	-	-	-	4	-	-	-	-	SALEABLE		N/A	N/A	N/A	N/A
								-	-	-	12	-	-	-	-						
MX150 ASSY RCP 2X8 LG B/15	334721685	B-LIGHT GRAY	GCP	PLR		M	R	-	-	-	-	-	-	-	-	SALEABLE		N/A	N/A	N/A	N/A
								-	-	-	-	-	-	-	16						
MX150 ASSY RCP 2X8 LG B/13	334721686	B-LIGHT GRAY	GCP	PLR		M	R	-	-	-	4	-	-	-	-	SALEABLE		N/A	N/A	N/A	N/A
								-	-	-	12	-	14	-	-						
MX150 ASSY RCP 2X8 LG B/15	334721687	B-LIGHT GRAY	GCP	PLR		M	R	-	-	-	-	-	-	-	-	SALEABLE		N/A	N/A	N/A	N/A
								-	-	-	-	-	14	-	-						
MX150 ASSY RCP 2X8 BK A/15	334721688	A-BLACK	GCP	PLR		M	R	-	2	-	-	-	-	-	-	SALEABLE		N/A	N/A	N/A	N/A
								-	-	-	-	-	-	-	-						
MX150 ASSY RCP 2X8 LG B/12	334721689	B-LIGHT GRAY	GCP	PLR		M	R	-	2	-	4	-	-	-	-	SALEABLE		N/A	N/A	N/A	N/A
								-	-	-	12	-	14	-	-						
MX150 ASSY RCP 2X8 LG B/14	334721690	B-LIGHT GRAY	GCP	PLR		M	R	-	2	-	-	-	-	-	-	SALEABLE		N/A	N/A	N/A	N/A
								-	-	-	-	-	14	-	-						
MX150 ASSY RCP 2X8 BK A/13	334721691	A-BLACK	GCP	PLR		M	R	-	2	-	4	-	-	-	-	SALEABLE		N/A	N/A	N/A	N/A
								-	-	-	12	-	-	-	-						
MX150 ASSY RCP 2X8 BK A/13	334721692	A-BLACK	GCP	PLR		M	R	-	-	-	4	-	-	-	8	SALEABLE		N/A	N/A	N/A	N/A
								-	-	-	12	-	-	-	-						
MX150 ASSY RCP 2X8 LG B/12	334721693	B-LIGHT GRAY	GCP	PLR		M	R	-	-	-	4	-	-	-	8	SALEABLE		N/A	N/A	N/A	N/A
								-	-	-	12	-	14	-	-						
MX150 ASSY RCP 2X8 LG B/14	334721694	B-LIGHT GRAY	GCP	PLR		M	R	-	-	-	-	-	-	-	8	SALEABLE		N/A	N/A	N/A	N/A
								-	-	-	-	-	14	-	-						
MX150 ASSY RCP 2X8 BK A/14	334721695	A-BLACK	GCP	PLR		M	R	-	2	-	-	-	-	-	8	SALEABLE		N/A	N/A	N/A	N/A
								-	-	-	-	-	-	-	-						
MX150 ASSY RCP 2X8 BK A/12	334721701	A-BLACK	GCP	PLR		M	R	-	2	-	4	-	-	-	8	SALEABLE		N/A	N/A	N/A	N/A
								-	-	-	12	-	-	-	-						
MX150 ASSY RCP 2X8 LG B/11	334721702	B-LIGHT GRAY	GCP	PLR		M	R	-	2	-	4	-	-	-	8	SALEABLE		N/A	N/A	N/A	N/A
								-	-	-	12	-	14	-	-						
MX150 ASSY RCP 2X8 LG B/13	334721703	B-LIGHT GRAY	GCP	PLR		M	R	-	2	-	-	-	-	-	8	SALEABLE		N/A	N/A	N/A	N/A
								-	-	-	-	-	14	-	-						
MX150 ASSY RCP 2X8 BK A/14	334721704	A-BLACK	GCP	PLR		M	R	-	2	-	4	-	-	-	-	SALEABLE		N/A	N/A	N/A	N/A
								-	-	-	-	-	-	-	-						
MX150 ASSY RCP 2X8 LG B/13	334721705	B-LIGHT GRAY	GCP	PLR		M	R	-	2	-	4	-	-	-	-	SALEABLE		N/A	N/A	N/A	N/A
								-	-	-	-	-	14	-	-						
MX150 ASSY RCP 2X8 BK A/9	334721706	A-BLACK	GCP	PLR		M	R	-	2	-	-	-	6	-	-	SALEABLE		N/A	N/A	N/A	N/A
								-	10	-	-	13	14	15	16						
MX150 ASSY RCP 2X8 BK A/8	334721707	A-BLACK	GCP	PLR		M	R	-	2	-	-	-	6	-	-	SALEABLE		N/A	N/A	N/A	N/A
								-	10	11	-	13	14	15	16						
MX150 ASSY RCP 2X8 BK A/11	334721708	A-BLACK	GCP	PLR		M	R	-	2	-	-	-	6	-	-	SALEABLE		N/A	N/A	N/A	N/A
								-	10	-	-	13	14	-	-						
MX150 ASSY RCP 2X8 BK A/14	334721709	A-BLACK	GCP	PLR		M	R	-	-	-	4	-	-	-	8	SALEABLE		N/A	N/A	N/A	N/A
								-	-	-	-	-	-	-	-						
MX150 ASSY RCP 2X8 BK A/13	334721710	A-BLACK	GCP	PLR		M	R	-	2	-	-	-	6	-	-	SALEABLE		N/A	N/A	N/A	N/A
								-	-	11	-	-	-	-	-						
MX150 ASSY RCP 2X8 BK A/14	334721711	A-BLACK	GCP	PLR		M	R	-	2	-	-	-	6	-	-	SALEABLE		N/A	N/A	N/A	N/A
								-	-	-	-	-	-	-	-						
MX150 ASSY RCP 2X8 CPA BK A/11	334721712	A-BLACK	GCP	PLR	CPA	M	R	-	-	-	-	5	6	7	8	SALEABLE		N/A	N/A	N/A	N/A
								-	-	-	-	13	-	-	-						
MX150 ASSY RCP 2X8 CPA BK A/8	334721713	A-BLACK	GCP	PLR	CPA	M	R	-	-	-	-	5	6	7	8	SALEABLE		N/A	N/A	N/A	N/A
								-	-	11	12	13	14	-	-						
MX150 ASSY RCP 2X8 CPA BK A/9	334721714	A-BLACK	GCP	PLR	CPA	M	R	-	-	-	-	5	6	7	8	SALEABLE		N/A	N/A	N/A	N/A
								-	-	-	12	13	14	-	-						

molex

MX150 RECEPTACLE 2X8 SEALED ASSEMBLY MAT SEAL
BOM AND PIN OUT SHEET

ASSEMBLY DESCRIPTION	ASSEMBLY PART NUMBER	COMPONENT THE PRESENCE OF AN ABBREVIATION INDICATES THE PRESENCE OF THAT COMPONENT						BLOCKED TERMINALS CAVITY WITH A NUMBER INDICATES BLOCKED TERMINAL POSITION CAVITY WITHOUT A NUMBER INDICATES OPEN TERMINAL POSITION								STATUS	COMMENT	OPTIONAL ATTACHMENTS SOLD SEPARATELY			
		HOUSING KEY/COLOR	GROMMET CAP	PLR	CPA	MAT SEAL	RING SEAL											BACKSHELL WITH RIBS	BACKSHELL WITHOUT RIBS	90^0 ADAPTOR WITH RIBS	90^0 ADAPTOR WITHOUT RIBS
MX150 ASSY RCP 2X8 CPA LG B/6	334721715	B-LIGHT GRAY	GCP	PLR	CPA	M	R	1	2	3	4	5	6	-	8	SALEABLE		N/A	N/A	N/A	N/A
								-	10	-	12	13	-	-	-						
MX150 ASSY RCP 2X8 CPA LG B/10	334721716	B-LIGHT GRAY	GCP	PLR	CPA	M	R	1	-	3	4	5	-	-	8	SALEABLE		N/A	N/A	N/A	N/A
								-	10	-	-	-	-	-	-						
MX150 ASSY RCP 2X8 CPA LG B/11	334721717	B-LIGHT GRAY	GCP	PLR	CPA	M	R	1	-	-	4	5	-	-	8	SALEABLE		N/A	N/A	N/A	N/A
								-	10	-	-	-	-	-	-						
MX150 ASSY RCP 2X8 CPA BK A/10	334721718	A-BLACK	GCP	PLR	CPA	M	R	-	-	-	-	5	6	7	8	SALEABLE		N/A	N/A	N/A	N/A
								-	-	11	-	13	-	-	-						
MX150 ASSY RCP 2X8 CPA BK A/11	334721719	A-BLACK	GCP	PLR	CPA	M	R	-	-	-	4	5	6	-	-	SALEABLE		N/A	N/A	N/A	N/A
								-	-	-	-	-	-	15	16						
MX150 ASSY RCP 2X8 CPA BK A/10	334721720	A-BLACK	GCP	PLR	CPA	M	R	-	-	3	4	5	6	-	-	SALEABLE		N/A	N/A	N/A	N/A
								-	-	-	-	-	-	15	16						
MX150 ASSY RCP 2X8 CPA BK A/11	334721721	A-BLACK	GCP	PLR	CPA	M	R	-	-	-	-	-	-	-	8	SALEABLE		N/A	N/A	N/A	N/A
								-	-	-	-	13	14	15	16						
MX150 ASSY RCP 2X8 CPA BK A/6	334721722	A-BLACK	GCP	PLR	CPA	M	R	1	2	3	4	5	6	-	8	SALEABLE		N/A	N/A	N/A	N/A
								-	-	-	-	13	-	15	16						
MX150 ASSY RCP 2X8 CPA BK A/10	334721723	A-BLACK	GCP	PLR	CPA	M	R	-	-	-	-	-	-	7	8	SALEABLE		N/A	N/A	N/A	N/A
								-	-	11	12	13	14	-	-						
MX150 ASSY RCP 2X8 CPA BK A/11	334721724	A-BLACK	GCP	PLR	CPA	M	R	-	-	-	-	-	-	7	8	SALEABLE		N/A	N/A	N/A	N/A
								-	-	-	12	13	14	-	-						
MX150 ASSY RCP 2X8 CPA BK A/13	334721725	A-BLACK	GCP	PLR	CPA	M	R	-	-	-	-	-	-	7	8	SALEABLE		N/A	N/A	N/A	N/A
								-	-	-	-	13	-	-	-						
MX150 ASSY RCP 2X8 CPA BK A/12	334721726	A-BLACK	GCP	PLR	CPA	M	R	-	-	-	-	-	-	7	8	SALEABLE		N/A	N/A	N/A	N/A
								-	-	11	-	13	-	-	-						
MX150 ASSY RCP 2X8 CPA LG B/12	334721728	B-LIGHT GRAY	GCP	PLR	CPA	M	R	-	-	-	4	5	-	-	8	SALEABLE		N/A	N/A	N/A	N/A
								-	-	-	12	-	-	-	-						
MX150 ASSY RCP 2X8 CPA LG B/7	334721729	B-LIGHT GRAY	GCP	PLR	CPA	M	R	1	2	-	4	5	6	-	8	SALEABLE		N/A	N/A	N/A	N/A
								-	10	-	12	13	-	-	-						
MX150 ASSY RCP 2X8 CPA LG B/6	334721730	B-LIGHT GRAY	GCP	PLR	CPA	M	R	-	2	-	4	5	6	-	8	SALEABLE		N/A	N/A	N/A	N/A
								-	10	11	12	13	-	-	16						
MX150 ASSY RCP 2X8 CPA LG B/12	334721731	B-LIGHT GRAY	GCP	PLR	CPA	M	R	-	-	-	4	5	-	-	-	SALEABLE		N/A	N/A	N/A	N/A
								-	-	-	12	13	-	-	-						
MX150 ASSY RCP 2X8 CPA LG B/8	334721732	B-LIGHT GRAY	GCP	PLR	CPA	M	R	-	2	-	4	5	6	-	8	SALEABLE		N/A	N/A	N/A	N/A
								-	10	-	12	13	-	-	-						
MX150 ASSY RCP 2X8 CPA LG B/14	334721733	B-LIGHT GRAY	GCP	PLR	CPA	M	R	-	-	-	-	-	6	-	-	SALEABLE		N/A	N/A	N/A	N/A
								-	-	11	-	-	-	-	-						
MX150 ASSY RCP 2X8 CPA LG B/13	334721734	B-LIGHT GRAY	GCP	PLR	CPA	M	R	-	-	3	-	-	6	-	-	SALEABLE		N/A	N/A	N/A	N/A
								-	-	11	-	-	-	-	-						
MX150 ASSY RCP 2X8 CPA LG B/7	334721735	B-LIGHT GRAY	GCP	PLR	CPA	M	R	-	2	3	4	5	6	-	8	SALEABLE		N/A	N/A	N/A	N/A
								-	10	-	12	13	-	-	-						
MX150 ASSY RCP 2X8 BK A/8	334721736	A-BLACK	GCP	PLR		M	R	-	2	-	4	5	6	-	-	SALEABLE		N/A	N/A	N/A	N/A
								-	10	-	12	13	14	-	-						
MX150 ASSY RCP 2X8 CPA LG B/4	334721737	B-LIGHT GRAY	GCP	PLR	CPA	M	R	1	2	3	4	5	6	-	8	SALEABLE		N/A	N/A	N/A	N/A
								-	10	11	12	13	-	-	16						
MX150 ASSY RCP 2X8 CPA LG B/15	334721738	B-LIGHT GRAY	GCP	PLR	CPA	M	R	-	-	-	-	-	-	-	-	SALEABLE		N/A	N/A	N/A	N/A
								-	10	-	-	-	-	-	-						
MX150 ASSY RCP 2X8 CPA LG B/11	334721739	B-LIGHT GRAY	GCP	PLR	CPA	M	R	-	-	-	4	5	-	-	-	SALEABLE		N/A	N/A	N/A	N/A
								-	10	-	12	13	-	-	-						
MX150 ASSY RCP 2X8 CPA BK A/14	334721740	A-BLACK	GCP	PLR	CPA	M	R	-	-	-	-	5	-	-	-	SALEABLE		N/A	N/A	N/A	N/A
								-	-	-	-	13	-	-	-						
MX150 ASSY RCP 2X8 CPA BK A/9	334721741	A-BLACK	GCP	PLR	CPA	M	R	-	-	-	-	-	-	7	8	SALEABLE		N/A	N/A	N/A	N/A
								-	-	11	12	13	14	15	-						
MX150 ASSY RCP 2X8 CPA BK A/10	334721742	A-BLACK	GCP	PLR	CPA	M	R	-	-	-	-	-	-	7	8	SALEABLE		N/A	N/A	N/A	N/A
								-	-	-	12	13	14	15	-						

molex

MX150 RECEPTACLE 2X8 SEALED ASSEMBLY MAT SEAL
BOM AND PIN OUT SHEET

ASSEMBLY DESCRIPTION	ASSEMBLY PART NUMBER	COMPONENT						BLOCKED TERMINALS								STATUS	COMMENT	OPTIONAL ATTACHMENTS SOLD SEPARATELY			
		THE PRESENCE OF AN ABBREVIATION INDICATES THE PRESENCE OF THAT COMPONENT						CAVITY WITH A NUMBER INDICATES BLOCKED TERMINAL POSITION CAVITY WITHOUT A NUMBER INDICATES OPEN TERMINAL POSITION													
		HOUSING KEY/COLOR	GROMMET CAP	PLR	CPA	MAT SEAL	RING SEAL											BACKSHELL WITH RIBS	BACKSHELL WITHOUT RIBS	90^0 ADAPTOR WITH RIBS	90^0 ADAPTOR WITHOUT RIBS
MX150 ASSY RCP 2X8 CPA BK A/14	334721743	A-BLACK	GCP	PLR	CPA	M	R	-	-	-	-	-	-	7	8	SALEABLE		N/A	N/A	N/A	N/A
								-	-	-	-	-	-	-	-						
MX150 ASSY RCP 2X8 CPA BK A/15	334721744	A-BLACK	GCP	PLR	CPA	M	R	-	-	-	-	-	-	-	-	SALEABLE		N/A	N/A	N/A	N/A
								-	-	11	-	-	-	-	-						
MX150 ASSY RCP 2X8 BK A/12	334721745	A-BLACK	GCP	PLR		M	R	-	-	-	-	-	-	-	-	SALEABLE		N/A	N/A	N/A	N/A
								-	10	11	-	-	-	15	16						
MX150 ASSY RCP 2X8 BK A/4	334721746	A-BLACK	GCP	PLR		M	R	1	2	3	4	5	6	-	-	SALEABLE		N/A	N/A	N/A	N/A
								-	-	11	12	13	14	15	16						
MX150 ASSY RCP 2X8 BK A/5	334721747	A-BLACK	GCP	PLR		M	R	1	2	3	4	5	6	-	8	SALEABLE		N/A	N/A	N/A	N/A
								9	-	-	-	-	14	15	16						
MX150 ASSY RCP 2X8 BK A/5	334721748	A-BLACK	GCP	PLR		M	R	1	2	3	4	5	6	-	-	SALEABLE		N/A	N/A	N/A	N/A
								-	-	-	12	13	14	15	16						
MX150 ASSY RCP 2X8 BK A/6	334721749	A-BLACK	GCP	PLR		M	R	-	-	-	-	-	-	7	8	SALEABLE		N/A	N/A	N/A	N/A
								9	10	11	12	13	14	15	16						
MX150 ASSY RCP 2X8 BK A/7	334721750	A-BLACK	GCP	PLR		M	R	1	2	3	4	5	6	-	-	SALEABLE		N/A	N/A	N/A	N/A
								-	-	-	-	-	14	15	16						
MX150 ASSY RCP 2X8 BK A/7	334721751	A-BLACK	GCP	PLR		M	R	-	-	-	-	-	-	-	8	SALEABLE		N/A	N/A	N/A	N/A
								9	10	11	12	13	14	15	16						
MX150 ASSY RCP 2X8 BK A/9	334721752	A-BLACK	GCP	PLR		M	R	-	-	-	-	-	-	-	-	SALEABLE		N/A	N/A	N/A	N/A
								-	10	11	12	13	14	15	16						
MX150 ASSY RCP 2X8 BK A/10	334721753	A-BLACK	GCP	PLR		M	R	-	-	-	-	-	-	-	-	SALEABLE		N/A	N/A	N/A	N/A
								-	-	11	12	13	14	15	16						
MX150 ASSY RCP 2X8 BK A/10	334721754	A-BLACK	GCP	PLR		M	R	1	2	3	4	5	6	-	-	SALEABLE		N/A	N/A	N/A	N/A
								-	-	-	-	-	-	-	-						
MX150 ASSY RCP 2X8 BK A/11	334721755	A-BLACK	GCP	PLR		M	R	-	-	-	-	-	-	-	8	SALEABLE		N/A	N/A	N/A	N/A
								9	-	-	-	-	14	15	16						
MX150 ASSY RCP 2X8 BK A/11	334721756	A-BLACK	GCP	PLR		M	R	-	-	-	-	-	-	-	-	SALEABLE		N/A	N/A	N/A	N/A
								-	-	-	12	13	14	15	16						
MX150 ASSY RCP 2X8 BK A/12	334721757	A-BLACK	GCP	PLR		M	R	-	-	-	-	-	-	7	8	SALEABLE		N/A	N/A	N/A	N/A
								9	10	-	-	-	-	-	-						
MX150 ASSY RCP 2X8 BK A/13	334721758	A-BLACK	GCP	PLR		M	R	-	-	-	-	-	-	-	-	SALEABLE		N/A	N/A	N/A	N/A
								-	-	-	-	-	14	15	16						
MX150 ASSY RCP 2X8 BK A/12	334721759	A-BLACK	GCP	PLR		M	R	-	2	-	-	-	6	7	8	SALEABLE		N/A	N/A	N/A	N/A
								-	-	-	-	-	-	-	-						
MX150 ASSY RCP 2X8 BK A/10	334721760	A-BLACK	GCP	PLR		M	R	-	2	-	4	-	6	7	8	SALEABLE		N/A	N/A	N/A	N/A
								-	-	-	12	-	-	-	-						
MX150 ASSY RCP 2X8 BK A/5	334721761	A-BLACK	GCP	PLR		M	R	-	2	-	-	5	6	7	8	SALEABLE		N/A	N/A	N/A	N/A
								9	10	-	12	-	14	15	16						
MX150 ASSY RCP 2X8 BK A/7	334721762	A-BLACK	GCP	PLR		M	R	-	2	-	-	5	6	7	8	SALEABLE		N/A	N/A	N/A	N/A
								-	10	-	12	-	14	15	-						
MX150 ASSY RCP 2X8 BK A/11	334721763	A-BLACK	GCP	PLR		M	R	-	2	-	-	-	-	-	-	SALEABLE		N/A	N/A	N/A	N/A
								9	10	-	-	-	-	15	16						
MX150 ASSY RCP 2X8 BK A/13	334721764	A-BLACK	GCP	PLR		M	R	-	2	-	-	-	-	-	-	SALEABLE		N/A	N/A	N/A	N/A
								-	10	-	-	-	-	15	-						
MX150 ASSY RCP 2X8 BK A/6	334721765	A-BLACK	GCP	PLR		M	R	1	2	3	4	5	6	7	8	SALEABLE		N/A	N/A	N/A	N/A
								9	10	-	-	-	-	-	-						
MX150 ASSY RCP 2X8 BK A/3	334721766	A-BLACK	GCP	PLR		M	R	1	2	3	4	5	6	-	-	SALEABLE		N/A	N/A	N/A	N/A
								-	10	11	12	13	14	15	16						
MX150 ASSY RCP 2X8 DG C/16	334721767	C-DARK GRAY	GCO	PLR		M	R	-	-	-	-	-	-	-	-	SALEABLE		N/A	N/A	N/A	N/A
								-	-	-	-	-	-	-	-						
MX150 ASSY RCP 2X8 SG D/16	334721768	D-STONE GRAY	GCO	PLR		M	R	-	-	-	-	-	-	-	-	SALEABLE		N/A	N/A	N/A	N/A
								-	-	-	-	-	-	-	-						
MX150 ASSY RCP 2X8 CPA DG C/16	334721769	C-DARK GRAY	GCO	PLR	CPA	M	R	-	-	-	-	-	-	-	-	SALEABLE		N/A	N/A	N/A	N/A
								-	-	-	-	-	-	-	-						

molex

MX150 RECEPTACLE 2X8 SEALED ASSEMBLY MAT SEAL
BOM AND PIN OUT SHEET

ASSEMBLY DESCRIPTION	ASSEMBLY PART NUMBER	COMPONENT						BLOCKED TERMINALS								STATUS	COMMENT	OPTIONAL ATTACHMENTS SOLD SEPARATELY			
		THE PRESENCE OF AN ABBREVIATION INDICATES THE PRESENCE OF THAT COMPONENT						CAVITY WITH A NUMBER INDICATES BLOCKED TERMINAL POSITION CAVITY WITHOUT A NUMBER INDICATES OPEN TERMINAL POSITION													
		HOUSING KEY/COLOR	GROMMET CAP	PLR	CPA	MAT SEAL	RING SEAL											BACKSHELL WITH RIBS	BACKSHELL WITHOUT RIBS	90^0 ADAPTOR WITH RIBS	90^0 ADAPTOR WITHOUT RIBS
MX150 ASSY RCP 2X8 CPA SG D/16	334721770	D-STONE GRAY	GCO	PLR	CPA	M	R	-	-	-	-	-	-	-	-	SALEABLE		N/A	N/A	N/A	N/A
								-	-	-	-	-	-	-	-						
MX150 ASSY RCP 2X8 LG B/2	334721771	B-LIGHT GRAY	GCP	PLR		M	R	1	2	3	4	5	6	7	8	SALEABLE		N/A	N/A	N/A	N/A
								9	10	-	12	-	14	15	16						
MX150 ASSY RCP 2X8 LG B/3	334721772	B-LIGHT GRAY	GCP	PLR		M	R	1	2	3	4	5	6	7	8	SALEABLE		N/A	N/A	N/A	N/A
								9	10	-	12	-	14	15	-						
MX150 ASSY RCP 2X8 CPA LG B/10	334721773	B-LIGHT GRAY	GCP	PLR	CPA	M	R	-	-	-	4	5	-	-	-	SALEABLE		N/A	N/A	N/A	N/A
								-	10	11	12	13	-	-	-						
MX150 ASSY RCP 2X8 CPA LG B/9	334721774	B-LIGHT GRAY	GCP	PLR	CPA	M	R	-	-	-	4	5	-	-	8	SALEABLE		N/A	N/A	N/A	N/A
								-	10	11	12	13	-	-	-						
MX150 ASSY RCP 2X8 CPA LG B/8	334721775	B-LIGHT GRAY	GCP	PLR	CPA	M	R	-	-	-	4	5	-	-	8	SALEABLE		N/A	N/A	N/A	N/A
								-	10	11	12	13	-	-	16						
MX150 ASSY RCP 2X8 CPA LG B/10	334721776	B-LIGHT GRAY	GCP	PLR	CPA	M	R	-	-	-	4	5	-	-	8	SALEABLE		N/A	N/A	N/A	N/A
								-	10	-	12	13	-	-	-						
MX150 ASSY RCP 2X8 CPA LG B/11	334721777	B-LIGHT GRAY	GCP	PLR	CPA	M	R	-	-	-	4	5	-	-	-	SALEABLE		N/A	N/A	N/A	N/A
								-	-	11	12	13	-	-	-						
MX150 ASSY RCP 2X8 BK A/10	334721778	A-BLACK	GCP	PLR		M	R	-	-	3	4	-	-	-	-	SALEABLE		N/A	N/A	N/A	N/A
								9	10	-	-	-	-	15	16						
MX150 ASSY RCP 2X8 BK A/7	334721779	A-BLACK	GCP	PLR		M	R	-	2	-	4	-	6	7	-	SALEABLE		N/A	N/A	N/A	N/A
								9	-	11	-	13	-	15	16						
MX150 ASSY RCP 2X8 CPA BK A/13	334721780	A-BLACK	GCP	PLR	CPA	M	R	-	-	-	-	-	-	-	-	SALEABLE		N/A	N/A	N/A	N/A
								-	-	-	-	-	14	15	16						
MX150 ASSY RCP 2X8 BK A/13	334721781	A-BLACK	GCP	PLR		M	R	-	-	-	4	5	-	7	-	SALEABLE		N/A	N/A	N/A	N/A
								-	-	-	-	-	-	-	-						
MX150 ASSY RCP 2X8 CPA BK A/11	334721782	A-BLACK	GCP	PLR	CPA	M	R	-	-	-	-	-	-	-	-	SALEABLE		N/A	N/A	N/A	N/A
								-	-	-	12	13	14	15	16						
MX150 ASSY RCP 2X8 BK A/4	334721783	A-BLACK	GCP	PLR		M	R	1	2	3	4	-	-	7	8	SALEABLE		N/A	N/A	N/A	N/A
								9	10	11	12	-	-	15	16						
MX150 ASSY RCP 2X8 BK A/6	334721784	A-BLACK	GCP	PLR		M	R	1	2	3	4	-	-	-	8	SALEABLE		N/A	N/A	N/A	N/A
								9	10	11	12	-	-	-	16						
MX150 ASSY RCP 2X8 BK A/9	334721785	A-BLACK	GCP	PLR		M	R	-	2	3	4	-	-	-	-	SALEABLE		N/A	N/A	N/A	N/A
								9	10	-	-	-	-	15	16						
MX150 ASSY RCP 2X8 BK A/3	334721786	A-BLACK	GCP	PLR		M	R	-	2	3	4	5	6	7	8	SALEABLE		N/A	N/A	N/A	N/A
								9	10	-	12	-	14	15	16						
MX150 ASSY RCP 2X8 BK A/10	334721787	A-BLACK	GCP	PLR		M	R	-	-	-	-	5	-	-	8	SALEABLE		N/A	N/A	N/A	N/A
								-	10	11	-	13	-	15	-						
MX150 ASSY RCP 2X8 BK A/9	334721788	A-BLACK	GCP	PLR		M	R	-	-	3	-	5	-	-	8	SALEABLE		N/A	N/A	N/A	N/A
								-	10	11	-	13	-	15	-						
MX150 ASSY RCP 2X8 BK A/11	334721789	A-BLACK	GCP	PLR		M	R	-	-	-	-	5	-	-	8	SALEABLE		N/A	N/A	N/A	N/A
								-	10	11	-	-	14	-	-						
MX150 ASSY RCP 2X8 BK A/6	334721790	A-BLACK	GCP	PLR		M	R	-	-	3	4	5	-	-	8	SALEABLE		N/A	N/A	N/A	N/A
								-	10	11	12	13	14	15	-						
MX150 ASSY RCP 2X8 BK A/10	334721791	A-BLACK	GCP	PLR		M	R	-	-	3	4	-	-	-	-	SALEABLE		N/A	N/A	N/A	N/A
								9	10	-	-	-	-	15	16						
MX150 ASSY RCP 2X8 BK A/7	334721792	A-BLACK	GCP	PLR		M	R	1	-	3	-	5	-	7	8	SALEABLE		N/A	N/A	N/A	N/A
								-	10	11	-	-	14	15	-						
MX150 ASSY RCP 2X8 BK A/12	334721793	A-BLACK	GCP	PLR		M	R	-	-	-	-	-	-	-	-	SALEABLE		N/A	N/A	N/A	N/A
								-	-	-	-	13	14	15	16						
MX150 ASSY RCP 2X8 BK A/10	334721794	A-BLACK	GCP	PLR		M	R	-	2	-	4	-	6	7	8	SALEABLE		N/A	N/A	N/A	N/A
								-	-	-	12	-	-	-	-						
MX150 ASSY RCP 2X8 CPA BK A/14	334721795	A-BLACK	GCP	PLR	CPA	M	R	-	-	-	-	-	-	-	-	SALEABLE		N/A	N/A	N/A	N/A
								-	-	-	12	-	14	-	-						
MX150 ASSY RCP 2X8 BK A/8	334721796	A-BLACK	GCP	PLR		M	R	1	-	-	-	5	-	7	8	SALEABLE		N/A	N/A	N/A	N/A
								-	10	11	-	-	14	15	-						

molex

MX150 RECEPTACLE 2X8 SEALED ASSEMBLY MAT SEAL
BOM AND PIN OUT SHEET

ASSEMBLY DESCRIPTION	ASSEMBLY PART NUMBER	COMPONENT: THE PRESENCE OF AN ABBREVIATION INDICATES THE PRESENCE OF THAT COMPONENT						BLOCKED TERMINALS: CAVITY WITH A NUMBER INDICATES BLOCKED TERMINAL POSITION; CAVITY WITHOUT A NUMBER INDICATES OPEN TERMINAL POSITION								STATUS	COMMENT	OPTIONAL ATTACHMENTS SOLD SEPARATELY			
		HOUSING KEY/COLOR	GROMMET CAP	PLR	CPA	MAT SEAL	RING SEAL											BACKSHELL WITH RIBS	BACKSHELL WITHOUT RIBS	90^0 ADAPTOR WITH RIBS	90^0 ADAPTOR WITHOUT RIBS
MX150 ASSY RCP 2X8 BK A/12	334721797	A-BLACK	GCP	PLR		M	R	-	-	-	-	5	-	-	8	SALEABLE		N/A	N/A	N/A	N/A
								-	10	11	-	-	-	-	-						
MX150 ASSY RCP 2X8 BK A/10	334721798	A-BLACK	GCP	PLR		M	R	1	-	3	-	5	-	7	-	SALEABLE		N/A	N/A	N/A	N/A
								-	-	11	-	-	-	15	-						
MX150 ASSY RCP 2X8 CPA LG B/11	334721799	B-LIGHT GRAY	GCP	PLR	CPA	M	R	-	2	-	4	-	-	-	8	SALEABLE		N/A	N/A	N/A	N/A
								-	-	-	12	-	14	-	-						
MX150 ASSY RCP 2X8 BK A/13	334721800	A-BLACK	GCP	PLR		M	R	1	-	3	-	5	-	-	-	SALEABLE		N/A	N/A	N/A	N/A
								-	-	-	-	-	-	-	-						
MX150 ASSY RCP 2X8 CPA LG B/11	334721801	B-LIGHT GRAY	GCP	PLR	CPA	M	R	-	-	-	4	5	-	-	8	SALEABLE		N/A	N/A	N/A	N/A
								-	-	-	12	13	-	-	-						
MX150 ASSY RCP 2X8 CPA LG B/9	334721802	B-LIGHT GRAY	GCP	PLR	CPA	M	R	-	2	-	4	5	6	-	8	SALEABLE		N/A	N/A	N/A	N/A
								-	-	-	12	13	-	-	-						
MX150 ASSY RCP 2X8 CPA LG B/8	334721803	B-LIGHT GRAY	GCP	PLR	CPA	M	R	-	2	-	4	5	6	-	8	SALEABLE		N/A	N/A	N/A	N/A
								-	10	-	12	13	-	-	-						
MX150 ASSY RCP 2X8 CPA LG B/8	334721804	B-LIGHT GRAY	GCP	PLR	CPA	M	R	-	2	3	4	5	6	-	8	SALEABLE		N/A	N/A	N/A	N/A
								-	-	-	12	13	-	-	-						
MX150 ASSY RCP 2X8 BK A/14	334721805	A-BLACK	GCP	PLR		M	R	-	-	-	-	-	-	-	-	SALEABLE		N/A	N/A	N/A	N/A
								-	-	-	-	-	14	15	-						
MX150 ASSY RCP 2X8 CPA BK A/8	334721806	A-BLACK	GCP	PLR	CPA	M	R	1	-	3	4	-	-	-	-	SALEABLE		N/A	N/A	N/A	N/A
								-	-	-	12	13	14	15	16						
MX150 ASSY RCP 2X8 CPA BK A/4	334721807	A-BLACK	GCP	PLR	CPA	M	R	1	2	3	4	5	-	-	8	SALEABLE		N/A	N/A	N/A	N/A
								-	-	11	12	13	14	15	16						
MX150 ASSY RCP 2X8 CPA BK A/10	334721808	A-BLACK	GCP	PLR	CPA	M	R	-	2	3	4	5	-	-	8	SALEABLE		N/A	N/A	N/A	N/A
								-	-	11	-	-	-	-	-						
MX150 ASSY RCP 2X8 CPA BK A/14	334721809	A-BLACK	GCP	PLR	CPA	M	R	-	-	3	4	-	-	-	-	SALEABLE		N/A	N/A	N/A	N/A
								-	-	-	-	-	-	-	-						
MX150 ASSY RCP 2X8 BK A/4	334721810	A-BLACK	GCP	PLR		M	R	1	2	3	4	5	6	7	8	SALEABLE		N/A	N/A	N/A	N/A
								-	-	-	-	13	14	15	16						
MX150 ASSY RCP 2X8 BK A/10	334721811	A-BLACK	GCP	PLR		M	R	1	2	3	-	-	-	-	-	SALEABLE		N/A	N/A	N/A	N/A
								-	-	-	-	13	14	15	-						
MX150 ASSY RCP 2X8 BK A/11	334721812	A-BLACK	GCP	PLR		M	R	1	2	-	-	-	-	-	-	SALEABLE		N/A	N/A	N/A	N/A
								-	-	-	-	13	14	15	-						
MX150 ASSY RCP 2X8 LG B/12	334721813	B-LIGHT GRAY	GCP	PLR		M	R	-	-	-	-	-	6	7	8	SALEABLE		N/A	N/A	N/A	N/A
								-	-	11	-	-	-	-	-						
MX150 ASSY RCP 2X8 LG B/11	334721814	B-LIGHT GRAY	GCP	PLR		M	R	-	-	-	-	-	6	7	8	SALEABLE		N/A	N/A	N/A	N/A
								-	-	11	-	-	14	-	-						
MX150 ASSY RCP 2X8 LG B/9	334721815	B-LIGHT GRAY	GCP	PLR		M	R	-	-	-	-	-	6	-	-	SALEABLE		N/A	N/A	N/A	N/A
								9	-	11	12	13	-	15	16						
MX150 ASSY RCP 2X8 LG B/7	334721816	B-LIGHT GRAY	GCP	PLR		M	R	-	-	-	-	-	6	-	-	SALEABLE		N/A	N/A	N/A	N/A
								9	10	11	12	13	14	15	16						
MX150 ASSY RCP 2X8 LG B/2	334721817	B-LIGHT GRAY	GCP	PLR		M	R	1	2	3	4	5	6	-	-	SALEABLE		N/A	N/A	N/A	N/A
								9	10	11	12	13	14	15	16						
MX150 ASSY RCP 2X8 BK A/8	334721818	A-BLACK	GCP	PLR		M	R	-	-	-	-	-	-	-	-	SALEABLE		N/A	N/A	N/A	N/A
								9	10	11	12	13	14	15	16						
MX150 ASSY RCP 2X8 CPA BK A/3	334721819	A-BLACK	GCP	PLR	CPA	M	R	-	-	-	4	5	6	7	8	SALEABLE		N/A	N/A	N/A	N/A
								9	10	11	12	13	14	15	16						
MX150 ASSY RCP 2X8 CPA BK A/9	334721820	A-BLACK	GCP	PLR	CPA	M	R	-	-	-	-	-	-	-	8	SALEABLE		N/A	N/A	N/A	N/A
								9	-	-	12	13	14	15	16						
MX150 ASSY RCP 2X8 CPA LG B/11	334721821	B-LIGHT GRAY	GCP	PLR	CPA	M	R	-	-	-	4	5	-	7	-	SALEABLE		N/A	N/A	N/A	N/A
								-	-	-	12	13	-	-	-						
MX150 ASSY RCP 2X8 CPA LG B/10	334721822	B-LIGHT GRAY	GCP	PLR	CPA	M	R	-	-	-	4	5	-	7	-	SALEABLE		N/A	N/A	N/A	N/A
								-	10	-	12	13	-	-	-						
MX150 ASSY RCP 2X8 CPA LG B/9	334721823	B-LIGHT GRAY	GCP	PLR	CPA	M	R	-	-	-	4	5	-	7	8	SALEABLE		N/A	N/A	N/A	N/A
								-	10	-	12	13	-	-	-						

molex

MX150 RECEPTACLE 2X8 SEALED ASSEMBLY MAT SEAL
BOM AND PIN OUT SHEET

ASSEMBLY DESCRIPTION	ASSEMBLY PART NUMBER	COMPONENT THE PRESENCE OF AN ABBREVIATION INDICATES THE PRESENCE OF THAT COMPONENT						BLOCKED TERMINALS CAVITY WITH A NUMBER INDICATES BLOCKED TERMINAL POSITION CAVITY WITHOUT A NUMBER INDICATES OPEN TERMINAL POSITION								STATUS	COMMENT	OPTIONAL ATTACHMENTS SOLD SEPARATELY			
		HOUSING KEY/COLOR	GROMMET CAP	PLR	CPA	MAT SEAL	RING SEAL											BACKSHELL WITH RIBS	BACKSHELL WITHOUT RIBS	90^0 ADAPTOR WITH RIBS	90^0 ADAPTOR WITHOUT RIBS
MX150 ASSY RCP 2X8 CPA LG B/8	334721824	B-LIGHT GRAY	GCP	PLR	CPA	M	R	-	-	-	4	5	-	7	8	SALEABLE		N/A	N/A	N/A	N/A
								9	10	-	12	13	-	-	-						
MX150 ASSY RCP 2X8 CPA LG B/6	334721825	B-LIGHT GRAY	GCP	PLR	CPA	M	R	-	2	-	4	5	6	7	8	SALEABLE		N/A	N/A	N/A	N/A
								9	10	-	12	13	-	-	-						
MX150 ASSY RCP 2X8 BK A/5	334721826	A-BLACK	GCP	PLR		M	R	1	2	3	4	5	6	-	-	SALEABLE		N/A	N/A	N/A	N/A
								9	-	-	-	13	14	15	16						
MX150 ASSY RCP 2X8 BK A/2	334721827	A-BLACK	GCP	PLR		M	R	1	2	3	4	5	6	-	-	SALEABLE		N/A	N/A	N/A	N/A
								9	10	11	12	13	14	15	16						
MX150 ASSY RCP 2X8 BK A/10	334721828	A-BLACK	GCP	PLR		M	R	-	-	-	-	-	6	-	-	SALEABLE		N/A	N/A	N/A	N/A
								-	10	11	12	13	14	-	-						
MX150 ASSY RCP 2X8 BK A/5	334721829	A-BLACK	GCP	PLR		M	R	1	2	3	4	5	6	-	-	SALEABLE		N/A	N/A	N/A	N/A
								-	10	11	12	13	14	-	-						
MX150 ASSY RCP 2X8 BK A/8	334721830	A-BLACK	GCP	PLR		M	R	1	2	3	4	5	6	-	-	SALEABLE		N/A	N/A	N/A	N/A
								-	-	-	-	13	14	-	-						
MX150 ASSY RCP 2X8 BK A/7	334721831	A-BLACK	GCP	PLR		M	R	-	-	-	-	-	6	-	-	SALEABLE		N/A	N/A	N/A	N/A
								9	10	11	12	13	14	15	16						
MX150 ASSY RCP 2X8 BK A/13	334721832	A-BLACK	GCP	PLR		M	R	-	2	-	-	-	-	-	8	SALEABLE		N/A	N/A	N/A	N/A
								-	-	-	-	-	-	-	16						
MX150 ASSY RCP 2X8 BK A/7	334721833	A-BLACK	GCP	PLR		M	R	1	2	3	4	5	6	-	8	SALEABLE		N/A	N/A	N/A	N/A
								-	10	-	-	-	-	-	16						
MX150 ASSY RCP 2X8 BK A/5	334721834	A-BLACK	GCP	PLR		M	R	1	2	3	4	5	6	7	8	SALEABLE		N/A	N/A	N/A	N/A
								9	10	-	-	-	-	-	16						
MX150 ASSY RCP 2X8 BK A/4	334721835	A-BLACK	GCP	PLR		M	R	1	2	3	4	5	6	7	-	SALEABLE		N/A	N/A	N/A	N/A
								9	-	11	-	13	-	15	16						
MX150 ASSY RCP 2X8 LG B/8	334721836	B-LIGHT GRAY	GCP	PLR		M	R	-	-	3	4	5	6	-	-	SALEABLE		N/A	N/A	N/A	N/A
								-	10	11	12	13	-	-	-						
MX150 ASSY RCP 2X8 BK A/12	334721837	A-BLACK	GCP	PLR		M	R	-	-	-	-	-	-	-	-	SALEABLE		N/A	N/A	N/A	N/A
								-	-	11	12	13	14	-	-						
MX150 ASSY RCP 2X8 BK A/14	334721838	A-BLACK	GCP	PLR		M	R	-	-	-	-	-	-	-	-	SALEABLE		N/A	N/A	N/A	N/A
								-	-	11	-	-	14	-	-						
MX150 ASSY RCP 2X8 BK A/9	334721839	A-BLACK	GCP	PLR		M	R	1	-	3	-	-	-	-	-	SALEABLE		N/A	N/A	N/A	N/A
								-	-	11	12	13	-	15	16						
MX150 ASSY RCP 2X8 BK A/6	334721840	A-BLACK	GCP	PLR		M	R	1	-	3	-	-	-	-	8	SALEABLE		N/A	N/A	N/A	N/A
								9	-	11	12	13	14	15	16						
MX150 ASSY RCP 2X8 BK A/10	334721841	A-BLACK	GCP	PLR		M	R	1	2	-	-	5	6	7	8	SALEABLE		N/A	N/A	N/A	N/A
								-	-	-	-	-	-	-	-						
MX150 ASSY RCP 2X8 BK A/12	334721842	A-BLACK	GCP	PLR		M	R	-	-	3	4	-	-	-	-	SALEABLE		N/A	N/A	N/A	N/A
								-	-	11	12	-	-	-	-						
MX150 ASSY RCP 2X8 BK A/11	334721843	A-BLACK	GCP	PLR		M	R	-	-	-	-	-	-	-	-	SALEABLE		N/A	N/A	N/A	N/A
								9	-	-	-	13	14	15	16						
MX150 ASSY RCP 2X8 BK A/6	334721844	A-BLACK	GCP	PLR		M	R	-	-	3	4	-	-	-	-	SALEABLE		N/A	N/A	N/A	N/A
								9	10	11	12	13	14	15	16						
MX150 ASSY RCP 2X8 LG B/5	334721845	B-LIGHT GRAY	GCP	PLR		M	R	-	-	3	4	5	6	-	8	SALEABLE		N/A	N/A	N/A	N/A
								9	10	11	12	13	14	-	-						
MX150 ASSY RCP 2X8 BK A/12	334721846	A-BLACK	GCP	PLR		M	R	-	-	-	-	-	-	-	-	SALEABLE		N/A	N/A	N/A	N/A
								9	10	-	-	-	-	15	16						
MX150 ASSY RCP 2X8 BK A/14	334721847	A-BLACK	GCP	PLR		M	R	-	-	-	-	-	-	-	-	SALEABLE		N/A	N/A	N/A	N/A
								-	10	-	-	-	-	15	-						
MX150 ASSY RCP 2X8 BK A/2	334721848	A-BLACK	GCP	PLR		M	R	1	2	3	4	5	6	7	8	SALEABLE		N/A	N/A	N/A	N/A
								9	10	11	-	-	14	15	16						
MX150 ASSY RCP 2X8 BK A/11	334721849	A-BLACK	GCP	PLR		M	R	-	2	-	-	-	-	-	8	SALEABLE		N/A	N/A	N/A	N/A
								-	-	-	-	-	14	15	16						
MX150 ASSY RCP 2X8 BK A/8	334721850	A-BLACK	GCP	PLR		M	R	1	-	3	-	-	-	-	-	SALEABLE		N/A	N/A	N/A	N/A
								9	-	11	12	13	-	15	16						

molex

MX150 RECEPTACLE 2X8 SEALED ASSEMBLY MAT SEAL
BOM AND PIN OUT SHEET

ASSEMBLY DESCRIPTION	ASSEMBLY PART NUMBER	COMPONENT THE PRESENCE OF AN ABBREVIATION INDICATES THE PRESENCE OF THAT COMPONENT						BLOCKED TERMINALS CAVITY WITH A NUMBER INDICATES BLOCKED TERMINAL POSITION CAVITY WITHOUT A NUMBER INDICATES OPEN TERMINAL POSITION								STATUS	COMMENT	OPTIONAL ATTACHMENTS SOLD SEPARATELY			
		HOUSING KEY/COLOR	GROMMET CAP	PLR	CPA	MAT SEAL	RING SEAL											BACKSHELL WITH RIBS	BACKSHELL WITHOUT RIBS	90^0 ADAPTOR WITH RIBS	90^0 ADAPTOR WITHOUT RIBS
MX150 ASSY RCP 2X8 BK A/5	334721851	A-BLACK	GCP	PLR		M	R	1	2	3	4	5	6	-	8	SALEABLE		N/A	N/A	N/A	N/A
								-	10	-	-	-	14	15	16						
MX150 ASSY RCP 2X8 BK A/3	334721852	A-BLACK	GCP	PLR		M	R	1	2	-	-	5	-	7	8	SALEABLE		N/A	N/A	N/A	N/A
								9	10	11	12	13	14	15	16						
MX150 ASSY RCP 2X8 BK A/5	334721853	A-BLACK	GCP	PLR		M	R	-	2	-	-	5	-	7	-	SALEABLE		N/A	N/A	N/A	N/A
								9	10	11	12	13	14	15	16						
MX150 ASSY RCP 2X8 BK A/11	334721854	A-BLACK	GCP	PLR		M	R	-	2	-	-	5	-	7	-	SALEABLE		N/A	N/A	N/A	N/A
								9	-	-	-	-	-	-	16						
MX150 ASSY RCP 2X8 BK A/13	334721855	A-BLACK	GCP	PLR		M	R	-	-	-	-	5	-	7	-	SALEABLE		N/A	N/A	N/A	N/A
								-	-	-	-	-	-	-	16						
MX150 ASSY RCP 2X8 BK A/12	334721856	A-BLACK	GCP	PLR		M	R	-	2	-	-	-	-	7	-	SALEABLE		N/A	N/A	N/A	N/A
								9	-	-	-	-	-	-	16						
MX150 ASSY RCP 2X8 BK A/14	334721857	A-BLACK	GCP	PLR		M	R	-	-	-	-	-	-	7	-	SALEABLE		N/A	N/A	N/A	N/A
								-	-	-	-	-	-	-	16						
MX150 ASSY RCP 2X8 BK A/6	334721858	A-BLACK	GCP	PLR		M	R	-	2	-	-	5	-	7	-	SALEABLE		N/A	N/A	N/A	N/A
								9	-	11	12	13	14	15	16						
MX150 ASSY RCP 2X8 BK A/9	334721859	A-BLACK	GCP	PLR		M	R	-	2	-	-	5	-	-	-	SALEABLE		N/A	N/A	N/A	N/A
								9	-	-	12	13	14	15	-						
MX150 ASSY RCP 2X8 BK A/13	334721860	A-BLACK	GCP	PLR		M	R	-	2	-	-	5	-	-	-	SALEABLE		N/A	N/A	N/A	N/A
								9	-	-	-	-	-	-	-						
MX150 ASSY RCP 2X8 BK A/14	334721861	A-BLACK	GCP	PLR		M	R	-	2	-	-	-	-	-	-	SALEABLE		N/A	N/A	N/A	N/A
								9	-	-	-	-	-	-	-						
MX150 ASSY RCP 2X8 BK A/13	334721862	A-BLACK	GCP	PLR		M	R	-	2	-	-	-	-	7	-	SALEABLE		N/A	N/A	N/A	N/A
								-	-	-	-	-	-	-	16						
MX150 ASSY RCP 2X8 BK A/7	334721863	A-BLACK	GCP	PLR		M	R	1	-	3	-	-	-	-	8	SALEABLE		N/A	N/A	N/A	N/A
								-	-	11	12	13	14	15	16						
MX150 ASSY RCP 2X8 BK A/9	334721864	A-BLACK	GCP	PLR		M	R	-	-	-	-	-	-	-	-	SALEABLE		N/A	N/A	N/A	N/A
								9	-	11	12	13	14	15	16						
MX150 ASSY RCP 2X8 BK A/7	334721865	A-BLACK	GCP	PLR		M	R	1	-	-	4	-	6	7	8	SALEABLE		N/A	N/A	N/A	N/A
								-	10	-	-	13	14	15	-						
MX150 ASSY RCP 2X8 CPA BK A/15	334721866	A-BLACK	GCP	PLR	CPA	M	R	-	-	-	-	5	-	-	-	SALEABLE		N/A	N/A	N/A	N/A
								-	-	-	-	-	-	-	-						
MX150 ASSY RCP 2X8 BK A/7	334721867	A-BLACK	GCP	PLR		M	R	-	2	-	-	5	-	7	-	SALEABLE		N/A	N/A	N/A	N/A
								9	-	-	12	13	14	15	16						
MX150 ASSY RCP 2X8 CPA BK A/2	334721868	A-BLACK	GCP	PLR	CPA	M	R	1	2	3	4	-	6	7	-	SALEABLE		N/A	N/A	N/A	N/A
								9	10	11	12	13	14	15	16						
MX150 ASSY RCP 2X8 BK A/6	334721869	A-BLACK	GCP	PLR		M	R	-	-	-	4	5	6	7	8	SALEABLE		N/A	N/A	N/A	N/A
								-	-	-	12	13	14	15	16						
MX150 ASSY RCP 2X8 BK A/8	334721870	A-BLACK	GCP	PLR		M	R	1	2	3	4	-	-	-	-	SALEABLE		N/A	N/A	N/A	N/A
								9	10	11	-	13	-	-	-						
MX150 ASSY RCP 2X8 BK A/3	334721871	A-BLACK	GCP	PLR		M	R	1	2	-	-	5	6	7	8	SALEABLE		N/A	N/A	N/A	N/A
								9	10	11	12	13	14	-	16						
MX150 ASSY RCP 2X8 BK A/7	334721872	A-BLACK	GCP	PLR		M	R	1	2	-	-	5	6	7	8	SALEABLE		N/A	N/A	N/A	N/A
								9	10	-	-	-	-	-	16						
MX150 ASSY RCP 2X8 BK A/7	334721873	A-BLACK	GCP	PLR		M	R	-	-	-	-	5	6	7	-	SALEABLE		N/A	N/A	N/A	N/A
								9	-	11	12	13	14	-	16						
MX150 ASSY RCP 2X8 BK A/11	334721874	A-BLACK	GCP	PLR		M	R	-	-	-	-	5	6	7	-	SALEABLE		N/A	N/A	N/A	N/A
								9	-	-	-	-	-	-	16						
MX150 ASSY RCP 2X8 BK A/7	334721875	A-BLACK	GCP	PLR		M	R	1	2	-	-	-	-	-	8	SALEABLE		N/A	N/A	N/A	N/A
								-	10	11	12	13	14	-	16						
MX150 ASSY RCP 2X8 BK A/11	334721876	A-BLACK	GCP	PLR		M	R	-	-	-	-	-	-	-	-	SALEABLE		N/A	N/A	N/A	N/A
								-	-	11	12	13	14	-	16						
MX150 ASSY RCP 2X8 BK A/11	334721877	A-BLACK	GCP	PLR		M	R	1	2	-	-	-	-	-	8	SALEABLE		N/A	N/A	N/A	N/A
								-	10	-	-	-	-	-	16						

molex

MX150 RECEPTACLE 2X8 SEALED ASSEMBLY MAT SEAL
BOM AND PIN OUT SHEET

ASSEMBLY DESCRIPTION	ASSEMBLY PART NUMBER	COMPONENT						BLOCKED TERMINALS								STATUS	COMMENT	OPTIONAL ATTACHMENTS SOLD SEPARATELY			
		THE PRESENCE OF AN ABBREVIATION INDICATES THE PRESENCE OF THAT COMPONENT						CAVITY WITH A NUMBER INDICATES BLOCKED TERMINAL POSITION CAVITY WITHOUT A NUMBER INDICATES OPEN TERMINAL POSITION													
		HOUSING KEY/COLOR	GROMMET CAP	PLR	CPA	MAT SEAL	RING SEAL											BACKSHELL WITH RIBS	BACKSHELL WITHOUT RIBS	90^0 ADAPTOR WITH RIBS	90^0 ADAPTOR WITHOUT RIBS
MX150 ASSY RCP 2X8 BK A/9	334721878	A-BLACK	GCP	PLR		M	R	-	-	3	-	5	-	7	-	SALEABLE		N/A	N/A	N/A	N/A
								-	10	11	-	13	-	15	-						
MX150 ASSY RCP 2X8 BK A/3	334721879	A-BLACK	GCP	PLR		M	R	1	2	3	4	5	-	-	8	SALEABLE		N/A	N/A	N/A	N/A
								9	10	11	12	13	14	-	16						
MX150 ASSY RCP 2X8 BK A/13	334721880	A-BLACK	GCP	PLR		M	R	-	-	-	-	-	-	-	-	SALEABLE		N/A	N/A	N/A	N/A
								-	-	-	12	13	14	-	-						
MX150 ASSY RCP 2X8 BK A/11	334721881	A-BLACK	GCP	PLR		M	R	-	2	-	-	-	-	-	-	SALEABLE		N/A	N/A	N/A	N/A
								9	-	-	12	13	14	-	-						
MX150 ASSY RCP 2X8 BK A/7	334721882	A-BLACK	GCP	PLR		M	R	1	-	-	4	5	6	-	8	SALEABLE		N/A	N/A	N/A	N/A
								-	-	-	12	13	14	-	16						
MX150 ASSY RCP 2X8 BK A/3	334721883	A-BLACK	GCP	PLR		M	R	1	2	-	4	5	6	-	8	SALEABLE		N/A	N/A	N/A	N/A
								9	10	-	12	13	14	15	16						
MX150 ASSY RCP 2X8 BK A/7	334721884	A-BLACK	GCP	PLR		M	R	-	-	-	4	5	-	-	8	SALEABLE		N/A	N/A	N/A	N/A
								-	10	11	12	13	14	15	-						
MX150 ASSY RCP 2X8 BK A/8	334721885	A-BLACK	GCP	PLR		M	R	-	-	-	-	-	-	7	8	SALEABLE		N/A	N/A	N/A	N/A
								9	10	11	12	13	14	-	-						
MX150 ASSY RCP 2X8 CPA YW A/16	334721886	A-YELLOW	GCO	PLR	CPA	M	R	-	-	-	-	-	-	-	-	SALEABLE		N/A	N/A	N/A	N/A
								-	-	-	-	-	-	-	-						
MX150 ASSY RCP 2X8 BK A/9	334721887	A-BLACK	GCP	PLR		M	R	1	-	-	4	5	-	-	-	SALEABLE		N/A	N/A	N/A	N/A
								-	-	11	-	13	14	15	-						
MX150 ASSY RCP 2X8 CPA BK A/12	334721888	A-BLACK	GCP	PLR	CPA	M	R	-	-	-	-	-	6	-	-	SALEABLE		N/A	N/A	N/A	N/A
								9	-	-	-	-	-	15	16						
MX150 ASSY RCP 2X8 BK A/14	334721889	A-BLACK	GCP	PLR		M	R	-	-	-	-	-	-	-	-	SALEABLE		N/A	N/A	N/A	N/A
								-	-	-	-	13	14	-	-						
MX150 ASSY RCP 2X8 CPA BK A/14	334721890	A-BLACK	GCP	PLR	CPA	M	R	-	-	-	-	5	-	-	8	SALEABLE		N/A	N/A	N/A	N/A
								-	-	-	-	-	-	-	-						
MX150 ASSY RCP 2X8 CPA BK A/8	334721891	A-BLACK	GCP	PLR	CPA	M	R	-	-	-	-	5	6	7	8	SALEABLE		N/A	N/A	N/A	N/A
								9	10	11	12	-	-	-	-						
MX150 ASSY RCP 2X8 BK A/7	334721894	A-BLACK	GCP	PLR		M	R	-	-	-	-	5	6	7	8	SALEABLE		N/A	N/A	N/A	N/A
								-	-	-	12	13	14	15	16						
MX150 ASSY RCP 2X8 BK A/9	334721895	A-BLACK	GCP	PLR		M	R	1	2	3	-	-	-	-	-	SALEABLE		N/A	N/A	N/A	N/A
								9	10	11	-	13	-	-	-						
MX150 ASSY RCP 2X8 BK A/13	334721896	A-BLACK	GCP	PLR		M	R	1	2	-	-	5	-	-	-	SALEABLE		N/A	N/A	N/A	N/A
								-	-	-	-	-	-	-	-						
MX150 ASSY RCP 2X8 BK A/13	334721897	A-BLACK	GCP	PLR		M	R	-	-	-	-	5	-	-	-	SALEABLE		N/A	N/A	N/A	N/A
								-	-	-	-	13	14	-	-						
MX150 ASSY RCP 2X8 BK A/11	334721898	A-BLACK	GCP	PLR		M	R	1	2	-	-	5	-	-	-	SALEABLE		N/A	N/A	N/A	N/A
								-	-	-	-	13	14	-	-						
MX150 ASSY RCP 2X8 BK A/7	334721899	A-BLACK	GCP	PLR		M	R	-	-	-	-	5	-	7	8	SALEABLE		N/A	N/A	N/A	N/A
								9	10	11	12	13	14	-	-						
MX150 ASSY RCP 2X8 BK A/5	334721900	A-BLACK	GCP	PLR		M	R	1	2	-	-	5	-	7	8	SALEABLE		N/A	N/A	N/A	N/A
								9	10	11	12	13	14	-	-						
MX150 ASSY RCP 2X8 BK A/13	334721901	A-BLACK	GCP	PLR		M	R	-	-	-	-	-	-	-	8	SALEABLE		N/A	N/A	N/A	N/A
								-	10	11	-	-	-	-	-						
MX150 ASSY RCP 2X8 BK A/15	334721902	A-BLACK	GCP	PLR		M	R	-	-	3	-	-	-	-	-	SALEABLE		N/A	N/A	N/A	N/A
								-	-	-	-	-	-	-	-						
MX150 ASSY RCP 2X8 BK A/7	334721903	A-BLACK	GCP	PLR		M	R	-	-	3	-	-	-	7	8	SALEABLE		N/A	N/A	N/A	N/A
								9	10	11	12	13	14	-	-						
MX150 ASSY RCP 2X8 BK A/11	334721904	A-BLACK	GCP	PLR		M	R	-	2	-	-	-	-	-	8	SALEABLE		N/A	N/A	N/A	N/A
								-	10	11	-	-	14	-	-						
MX150 ASSY RCP 2X8 BK A/9	334721905	A-BLACK	GCP	PLR		M	R	1	-	-	-	5	-	-	8	SALEABLE		N/A	N/A	N/A	N/A
								-	10	11	-	13	-	15	-						
MX150 ASSY RCP 2X8 BK A/11	334721906	A-BLACK	GCP	PLR		M	R	-	-	-	-	-	-	-	-	SALEABLE		N/A	N/A	N/A	N/A
								-	10	-	-	13	14	15	16						

molex

MX150 RECEPTACLE 2X8 SEALED ASSEMBLY MAT SEAL
BOM AND PIN OUT SHEET

ASSEMBLY DESCRIPTION	ASSEMBLY PART NUMBER	COMPONENT						BLOCKED TERMINALS								STATUS	COMMENT	OPTIONAL ATTACHMENTS SOLD SEPARATELY			
		THE PRESENCE OF AN ABBREVIATION INDICATES THE PRESENCE OF THAT COMPONENT						CAVITY WITH A NUMBER INDICATES BLOCKED TERMINAL POSITION CAVITY WITHOUT A NUMBER INDICATES OPEN TERMINAL POSITION													
		HOUSING KEY/COLOR	GROMMET CAP	PLR	CPA	MAT SEAL	RING SEAL											BACKSHELL WITH RIBS	BACKSHELL WITHOUT RIBS	90^0 ADAPTOR WITH RIBS	90^0 ADAPTOR WITHOUT RIBS
MX150 ASSY RCP 2X8 BK A/8	334721907	A-BLACK	GCP	PLR		M	R	1	-	-	4	5	6	-	8	SALEABLE		N/A	N/A	N/A	N/A
								-	-	-	12	13	14	-	-						
MX150 ASSY RCP 2X8 CPA BK A/12	334721908	A-BLACK	GCP	PLR	CPA	M	R	-	-	-	-	-	-	-	-	SALEABLE		N/A	N/A	N/A	N/A
								-	-	11	12	13	14	-	-						
MX150 ASSY RCP 2X8 CPA BK A/10	334721909	A-BLACK	GCP	PLR	CPA	M	R	1	-	3	-	5	6	-	-	SALEABLE		N/A	N/A	N/A	N/A
								-	-	-	12	13	-	-	-						
MX150 ASSY RCP 2X8 CPA BK A/12	334721910	A-BLACK	GCP	PLR	CPA	M	R	-	-	-	-	-	-	7	8	SALEABLE		N/A	N/A	N/A	N/A
								9	-	-	-	-	-	-	16						
MX150 ASSY RCP 2X8 BK A/5	334721911	A-BLACK	GCP	PLR		M	R	-	-	3	-	-	-	7	8	SALEABLE		N/A	N/A	N/A	N/A
								9	10	11	12	13	14	15	16						
MX150 ASSY RCP 2X8 BK A/13	334721912	A-BLACK	GCP	PLR		M	R	-	-	3	-	-	-	-	-	SALEABLE		N/A	N/A	N/A	N/A
								-	-	-	-	-	-	15	16						
MX150 ASSY RCP 2X8 BK A/7	334721913	A-BLACK	GCP	PLR		M	R	-	-	-	-	-	-	7	8	SALEABLE		N/A	N/A	N/A	N/A
								9	10	11	12	13	14	-	16						
MX150 ASSY RCP 2X8 BK A/13	334721914	A-BLACK	GCP	PLR		M	R	-	-	-	-	-	-	-	-	SALEABLE		N/A	N/A	N/A	N/A
								-	-	-	-	13	14	-	16						
MX150 ASSY RCP 2X8 CPA BK A/0	334721915	A-BLACK	GCP	PLR	CPA	M	R	1	2	3	4	5	6	7	8	SALEABLE		N/A	N/A	N/A	N/A
								9	10	11	12	13	14	15	16						
MX150 ASSY RCP 2X8 BK A/11	334721916	A-BLACK	GCP	PLR		M	R	1	-	-	-	5	-	-	-	SALEABLE		N/A	N/A	N/A	N/A
								-	-	11	-	13	-	15	-						
MX150 ASSY RCP 2X8 BK A/15	334721917	A-BLACK	GCP	PLR		M	R	-	-	-	-	-	-	-	-	SALEABLE		N/A	N/A	N/A	N/A
								-	10	-	-	-	-	-	-						
MX150 ASSY RCP 2X8 BK A/15	334721918	A-BLACK	GCP	PLR		M	R	-	-	-	-	-	-	-	-	SALEABLE		N/A	N/A	N/A	N/A
								-	-	-	-	-	14	-	-						
MX150 ASSY RCP 2X8 CPA BK A/10	334721919	A-BLACK	GCP	PLR	CPA	M	R	1	2	-	-	5	-	-	8	SALEABLE		N/A	N/A	N/A	N/A
								-	-	-	-	-	14	15	-						
MX150 ASSY RCP 2X8 CPA BK A/4	334721920	A-BLACK	GCP	PLR	CPA	M	R	1	2	-	-	5	6	7	8	SALEABLE		N/A	N/A	N/A	N/A
								9	10	11	12	-	14	15	-						
MX150 ASSY RCP 2X8 BK A/13	334721921	A-BLACK	GCP	PLR		M	R	-	-	3	-	-	-	-	-	SALEABLE		N/A	N/A	N/A	N/A
								-	-	-	-	13	14	-	-						
MX150 ASSY RCP 2X8 BK A/3	334721922	A-BLACK	GCP	PLR		M	R	1	2	3	4	5	6	7	8	SALEABLE		N/A	N/A	N/A	N/A
								9	-	-	12	13	-	15	16						
MX150 ASSY RCP 2X8 BK A/7	334721923	A-BLACK	GCP	PLR		M	R	1	2	-	4	5	-	7	8	SALEABLE		N/A	N/A	N/A	N/A
								9	-	-	-	-	-	15	16						
MX150 ASSY RCP 2X8 BK A/14	334721924	A-BLACK	GCP	PLR		M	R	-	-	-	-	-	-	-	8	SALEABLE		N/A	N/A	N/A	N/A
								-	-	-	-	-	-	-	16						
MX150 ASSY RCP 2X8 BK A/14	334721925	A-BLACK	GCP	PLR		M	R	-	-	3	-	-	6	-	-	SALEABLE		N/A	N/A	N/A	N/A
								-	-	-	-	-	-	-	-						
MX150 ASSY RCP 2X8 BK A/12	334721926	A-BLACK	GCP	PLR		M	R	-	-	3	-	-	6	-	-	SALEABLE		N/A	N/A	N/A	N/A
								-	-	-	-	13	14	-	-						
MX150 ASSY RCP 2X8 BK A/8	334721927	A-BLACK	GCP	PLR		M	R	-	-	3	4	5	6	7	-	SALEABLE		N/A	N/A	N/A	N/A
								9	-	-	-	-	-	15	16						
MX150 ASSY RCP 2X8 BK A/10	334721928	A-BLACK	GCP	PLR		M	R	-	-	-	-	-	6	7	8	SALEABLE		N/A	N/A	N/A	N/A
								-	-	-	-	-	14	15	16						
MX150 ASSY RCP 2X8 BK A/8	334721929	A-BLACK	GCP	PLR		M	R	-	-	-	-	-	6	7	8	SALEABLE		N/A	N/A	N/A	N/A
								-	-	-	12	13	14	15	16						
MX150 ASSY RCP 2X8 BK A/6	334721930	A-BLACK	GCP	PLR		M	R	1	2	3	4	5	-	-	-	SALEABLE		N/A	N/A	N/A	N/A
								9	10	11	12	13	-	-	-						
MX150 ASSY RCP 2X8 BK A/14	334721931	A-BLACK	GCP	PLR		M	R	1	-	-	-	-	-	-	-	SALEABLE		N/A	N/A	N/A	N/A
								-	-	-	-	-	14	-	-						
MX150 ASSY RCP 2X8 BK A/9	334721932	A-BLACK	GCP	PLR		M	R	1	2	-	4	5	6	-	-	SALEABLE		N/A	N/A	N/A	N/A
								-	10	-	-	-	14	-	-						
MX150 ASSY RCP 2X8 BK A/11	334721933	A-BLACK	GCP	PLR		M	R	-	-	-	-	-	-	-	8	SALEABLE		N/A	N/A	N/A	N/A
								-	10	11	-	13	-	15	-						

molex

MX150 RECEPTACLE 2X8 SEALED ASSEMBLY MAT SEAL
BOM AND PIN OUT SHEET

ASSEMBLY DESCRIPTION	ASSEMBLY PART NUMBER	COMPONENT THE PRESENCE OF AN ABBREVIATION INDICATES THE PRESENCE OF THAT COMPONENT						BLOCKED TERMINALS CAVITY WITH A NUMBER INDICATES BLOCKED TERMINAL POSITION CAVITY WITHOUT A NUMBER INDICATES OPEN TERMINAL POSITION								STATUS	COMMENT	OPTIONAL ATTACHMENTS SOLD SEPARATELY			
		HOUSING KEY/COLOR	GROMMET CAP	PLR	CPA	MAT SEAL	RING SEAL											BACKSHELL WITH RIBS	BACKSHELL WITHOUT RIBS	90^0 ADAPTOR WITH RIBS	90^0 ADAPTOR WITHOUT RIBS
MX150 ASSY RCP 2X8 BK A/10	334721934	A-BLACK	GCP	PLR		M	R	-	2	-	-	5	-	-	8	SALEABLE		N/A	N/A	N/A	N/A
								-	10	11	-	-	14	-	-						
MX150 ASSY RCP 2X8 BK A/8	334721935	A-BLACK	GCP	PLR		M	R	-	2	-	-	5	-	-	8	SALEABLE		N/A	N/A	N/A	N/A
								-	10	11	-	13	14	15	-						
MX150 ASSY RCP 2X8 CPA BK A/9	334721936	A-BLACK	GCP	PLR	CPA	M	R	-	2	-	4	-	6	-	-	SALEABLE		N/A	N/A	N/A	N/A
								-	10	-	12	-	14	15	-						
MX150 ASSY RCP 2X8 CPA LG B/9	334721937	B-LIGHT GRAY	GCP	PLR	CPA	M	R	-	2	-	4	-	6	-	-	SALEABLE		N/A	N/A	N/A	N/A
								-	10	-	12	-	14	15	-						
MX150 ASSY RCP 2X8 CPA BK A/11	334721938	A-BLACK	GCP	PLR	CPA	M	R	-	-	-	-	5	6	7	-	SALEABLE		N/A	N/A	N/A	N/A
								-	10	-	-	13	-	-	-						
MX150 ASSY RCP 2X8 CPA BK A/9	334721939	A-BLACK	GCP	PLR	CPA	M	R	1	2	3	-	5	6	-	-	SALEABLE		N/A	N/A	N/A	N/A
								-	-	-	12	13	-	-	-						
MX150 ASSY RCP 2X8 CPA BK A/14	334721940	A-BLACK	GCP	PLR	CPA	M	R	-	-	-	-	-	-	7	-	SALEABLE		N/A	N/A	N/A	N/A
								-	10	-	-	-	-	-	-						
MX150 ASSY RCP 2X8 CPA BK A/8	334721941	A-BLACK	GCP	PLR	CPA	M	R	-	-	-	4	5	6	7	-	SALEABLE		N/A	N/A	N/A	N/A
								-	10	-	-	-	14	15	16						
MX150 ASSY RCP 2X8 BK A/14	334721942	A-BLACK	GCP	PLR		M	R	-	-	-	-	-	-	-	-	SALEABLE		N/A	N/A	N/A	N/A
								-	-	-	12	13	-	-	-						
MX150 ASSY RCP 2X8 BK A/11	334721943	A-BLACK	GCP	PLR		M	R	-	-	-	-	-	-	-	8	SALEABLE		N/A	N/A	N/A	N/A
								-	-	11	12	13	-	-	16						
MX150 ASSY RCP 2X8 BK A/13	334721944	A-BLACK	GCP	PLR		M	R	-	-	-	-	-	-	-	8	SALEABLE		N/A	N/A	N/A	N/A
								-	-	-	-	13	-	-	16						
MX150 ASSY RCP 2X8 BK A/9	334721945	A-BLACK	GCP	PLR		M	R	-	-	-	4	5	-	-	8	SALEABLE		N/A	N/A	N/A	N/A
								-	10	11	-	13	14	-	-						
MX150 ASSY RCP 2X8 BK A/13	334721946	A-BLACK	GCP	PLR		M	R	1	-	-	-	-	-	-	-	SALEABLE		N/A	N/A	N/A	N/A
								-	-	-	12	-	14	-	-						
MX150 ASSY RCP 2X8 BK A/11	334721947	A-BLACK	GCP	PLR		M	R	-	-	-	-	5	-	-	8	SALEABLE		N/A	N/A	N/A	N/A
								-	10	11	-	13	-	-	-						
MX150 ASSY RCP 2X8 BK A/10	334721948	A-BLACK	GCP	PLR		M	R	-	-	-	4	-	-	-	8	SALEABLE		N/A	N/A	N/A	N/A
								-	-	-	-	13	14	15	16						
MX150 ASSY RCP 2X8 CPA BK A/8	334721949	A-BLACK	GCP	PLR	CPA	M	R	-	-	-	-	-	6	7	8	SALEABLE		N/A	N/A	N/A	N/A
								-	-	11	12	13	14	15	-						
MX150 ASSY RCP 2X8 BK A/12	334721950	A-BLACK	GCP	PLR		M	R	-	-	-	-	5	6	7	8	SALEABLE		N/A	N/A	N/A	N/A
								-	-	-	-	-	-	-	-						
MX150 ASSY RCP 2X8 CPA BK A/11	334721951	A-BLACK	GCP	PLR	CPA	M	R	-	-	-	-	-	-	-	-	SALEABLE		N/A	N/A	N/A	N/A
								-	-	11	12	-	14	15	16						
MX150 ASSY RCP 2X8 BK A/7	334721952	A-BLACK	GCP	PLR		M	R	-	-	-	-	5	6	7	8	SALEABLE		N/A	N/A	N/A	N/A
								-	-	11	12	13	14	15	-						
MX150 ASSY RCP 2X8 CPA BK A/7	334721953	A-BLACK	GCP	PLR	CPA	M	R	-	-	-	-	-	6	7	8	SALEABLE		N/A	N/A	N/A	N/A
								-	10	11	12	13	14	15	-						
MX150 ASSY RCP 2X8 CPA BK A/7	334721954	A-BLACK	GCP	PLR	CPA	M	R	-	-	-	-	5	6	7	8	SALEABLE		N/A	N/A	N/A	N/A
								-	-	11	12	13	14	15	-						
MX150 ASSY RCP 2X8 CPA BK A/12	334721955	A-BLACK	GCP	PLR	CPA	M	R	-	-	-	-	5	6	7	8	SALEABLE		N/A	N/A	N/A	N/A
								-	-	-	-	-	-	-	-						
MX150 ASSY RCP 2X8 LG B/15	334721956	B-LIGHT GRAY	GCP	PLR		M	R	-	-	3	-	-	-	-	-	SALEABLE		N/A	N/A	N/A	N/A
								-	-	-	-	-	-	-	-						
MX150 ASSY RCP 2X8 BK A/3	334721957	A-BLACK	GCP	PLR		M	R	1	2	3	4	5	6	7	8	SALEABLE		N/A	N/A	N/A	N/A
								-	-	-	12	13	14	15	16						
MX150 ASSY RCP 2X8 BK A/11	334721958	A-BLACK	GCP	PLR		M	R	-	-	-	-	-	-	7	8	SALEABLE		N/A	N/A	N/A	N/A
								-	-	-	-	-	14	15	16						
MX150 ASSY RCP 2X8 BK A/11	334721959	A-BLACK	GCP	PLR		M	R	-	-	-	-	-	-	-	-	SALEABLE		N/A	N/A	N/A	N/A
								-	10	11	12	13	14	-	-						
MX150 ASSY RCP 2X8 BK A/9	334721960	A-BLACK	GCP	PLR		M	R	-	-	-	4	-	6	-	8	SALEABLE		N/A	N/A	N/A	N/A
								-	-	-	-	13	14	15	16						

molex

MX150 RECEPTACLE 2X8 SEALED ASSEMBLY MAT SEAL
BOM AND PIN OUT SHEET

ASSEMBLY DESCRIPTION	ASSEMBLY PART NUMBER	COMPONENT						BLOCKED TERMINALS								STATUS	COMMENT	OPTIONAL ATTACHMENTS SOLD SEPARATELY			
		THE PRESENCE OF AN ABBREVIATION INDICATES THE PRESENCE OF THAT COMPONENT						CAVITY WITH A NUMBER INDICATES BLOCKED TERMINAL POSITION CAVITY WITHOUT A NUMBER INDICATES OPEN TERMINAL POSITION													
		HOUSING KEY/COLOR	GROMMET CAP	PLR	CPA	MAT SEAL	RING SEAL											BACKSHELL WITH RIBS	BACKSHELL WITHOUT RIBS	90^0 ADAPTOR WITH RIBS	90^0 ADAPTOR WITHOUT RIBS
MX150 ASSY RCP 2X8 BK A/6	334721961	A-BLACK	GCP	PLR		M	R	-	-	3	-	-	6	7	8	SALEABLE		N/A	N/A	N/A	N/A
								9	10	11	12	13	14	-	-						
MX150 ASSY RCP 2X8 LG B/15	334721962	B-LIGHT GRAY	GCP	PLR		M	R	-	-	-	-	-	-	-	-	SALEABLE		N/A	N/A	N/A	N/A
								-	-	-	-	13	-	-	-						
MX150 ASSY RCP 2X8 BK A/10	334721963	A-BLACK	GCP	PLR		M	R	-	-	-	-	5	-	7	8	SALEABLE		N/A	N/A	N/A	N/A
								-	-	11	-	13	-	15	-						
MX150 ASSY RCP 2X8 BK A/15	334721964	A-BLACK	GCP	PLR		M	R	-	-	-	-	-	-	-	-	SALEABLE		N/A	N/A	N/A	N/A
								-	-	-	-	13	-	-	-						
MX150 ASSY RCP 2X8 CPA BK A/11	334721965	A-BLACK	GCP	PLR	CPA	M	R	-	-	-	-	5	6	-	-	SALEABLE		N/A	N/A	N/A	N/A
								-	-	-	12	13	-	15	-						
MX150 ASSY RCP 2X8 CPA BK A/11	334721966	A-BLACK	GCP	PLR	CPA	M	R	-	-	-	-	-	6	7	8	SALEABLE		N/A	N/A	N/A	N/A
								-	10	11	-	-	-	-	-						
MX150 ASSY RCP 2X8 CPA BK A/13	334721967	A-BLACK	GCP	PLR	CPA	M	R	-	-	-	-	-	6	7	8	SALEABLE		N/A	N/A	N/A	N/A
								-	-	-	-	-	-	-	-						
MX150 ASSY RCP 2X8 BK A/8	334721968	A-BLACK	GCP	PLR		M	R	1	2	-	-	-	-	-	8	SALEABLE		N/A	N/A	N/A	N/A
								9	-	11	-	13	-	15	16						
MX150 ASSY RCP 2X8 CPA BK A/11	334721969	A-BLACK	GCP	PLR	CPA	M	R	-	-	-	-	-	-	-	-	SALEABLE		N/A	N/A	N/A	N/A
								-	-	11	12	13	14	15	-						
MX150 ASSY RCP 2X8 BK A/9	334721970	A-BLACK	GCP	PLR		M	R	-	-	-	4	5	-	-	8	SALEABLE		N/A	N/A	N/A	N/A
								-	-	-	-	13	14	15	16						
MX150 ASSY RCP 2X8 BK A/8	334721971	A-BLACK	GCP	PLR		M	R	1	2	3	4	5	6	7	8	SALEABLE		N/A	N/A	N/A	N/A
								-	-	-	-	-	-	-	-						
MX150 ASSY RCP 2X8 BK A/10	334721972	A-BLACK	GCP	PLR		M	R	-	2	-	-	-	-	-	8	SALEABLE		N/A	N/A	N/A	N/A
								-	10	11	-	-	-	15	16						
MX150 ASSY RCP 2X8 BK A/4	334721973	A-BLACK	GCP	PLR		M	R	1	2	3	4	5	6	7	8	SALEABLE		N/A	N/A	N/A	N/A
								9	-	-	12	13	14	-	-						
MX150 ASSY RCP 2X8 BK A/10	334721974	A-BLACK	GCP	PLR		M	R	-	2	-	-	-	-	-	8	SALEABLE		N/A	N/A	N/A	N/A
								9	-	-	12	13	14	-	-						
MX150 ASSY RCP 2X8 BK A/12	334721975	A-BLACK	GCP	PLR		M	R	-	-	-	-	-	-	-	-	SALEABLE		N/A	N/A	N/A	N/A
								9	-	-	12	13	14	-	-						
MX150 ASSY RCP 2X8 BK A/6	334721976	A-BLACK	GCP	PLR		M	R	-	2	-	-	-	-	-	8	SALEABLE		N/A	N/A	N/A	N/A
								9	10	11	12	13	14	15	16						
MX150 ASSY RCP 2X8 BK A/15	334721977	A-BLACK	GCP	PLR		M	R	-	-	-	-	-	-	-	-	SALEABLE		N/A	N/A	N/A	N/A
								9	-	-	-	-	-	-	-						
MX150 ASSY RCP 2X8 BK A/15	334721978	A-BLACK	GCP	PLR		M	R	-	-	-	-	-	-	-	-	SALEABLE		N/A	N/A	N/A	N/A
								-	-	-	-	-	-	15	-						
MX150 ASSY RCP 2X8 BK A/13	334721979	A-BLACK	GCP	PLR		M	R	-	-	-	-	-	-	-	-	SALEABLE		N/A	N/A	N/A	N/A
								-	-	11	12	-	-	15	-						
MX150 ASSY RCP 2X8 BK A/5	334721980	A-BLACK	GCP	PLR		M	R	1	-	-	4	-	6	7	8	SALEABLE		N/A	N/A	N/A	N/A
								-	10	11	12	13	14	15	-						
MX150 ASSY RCP 2X8 BK A/12	334721981	A-BLACK	GCP	PLR		M	R	-	-	3	4	5	-	-	-	SALEABLE		N/A	N/A	N/A	N/A
								-	10	-	-	-	-	-	-						
MX150 ASSY RCP 2X8 BK A/13	334721982	A-BLACK	GCP	PLR		M	R	-	-	-	-	-	-	-	-	SALEABLE		N/A	N/A	N/A	N/A
								-	10	11	-	-	-	15	-						
MX150 ASSY RCP 2X8 BK A/11	334721983	A-BLACK	GCP	PLR		M	R	1	-	-	-	-	-	-	8	SALEABLE		N/A	N/A	N/A	N/A
								-	10	11	-	-	-	15	-						
MX150 ASSY RCP 2X8 BK A/5	334721984	A-BLACK	GCP	PLR		M	R	1	2	3	4	5	6	7	8	SALEABLE		N/A	N/A	N/A	N/A
								-	10	11	-	-	-	15	-						
MX150 ASSY RCP 2X8 BK A/9	334721985	A-BLACK	GCP	PLR		M	R	1	-	-	-	-	-	-	8	SALEABLE		N/A	N/A	N/A	N/A
								9	10	11	-	-	-	15	16						
MX150 ASSY RCP 2X8 BK A/11	334721986	A-BLACK	GCP	PLR		M	R	-	-	-	-	-	-	-	-	SALEABLE		N/A	N/A	N/A	N/A
								9	10	11	-	-	-	15	16						
MX150 ASSY RCP 2X8 BK A/4	334721987	A-BLACK	GCP	PLR		M	R	1	2	3	-	5	6	7	-	SALEABLE		N/A	N/A	N/A	N/A
								9	-	11	-	13	14	15	16						

molex

MX150 RECEPTACLE 2X8 SEALED ASSEMBLY MAT SEAL
BOM AND PIN OUT SHEET

ASSEMBLY DESCRIPTION	ASSEMBLY PART NUMBER	COMPONENT						BLOCKED TERMINALS								STATUS	COMMENT	OPTIONAL ATTACHMENTS SOLD SEPARATELY			
		THE PRESENCE OF AN ABBREVIATION INDICATES THE PRESENCE OF THAT COMPONENT						CAVITY WITH A NUMBER INDICATES BLOCKED TERMINAL POSITION CAVITY WITHOUT A NUMBER INDICATES OPEN TERMINAL POSITION													
		HOUSING KEY/COLOR	GROMMET CAP	PLR	CPA	MAT SEAL	RING SEAL											BACKSHELL WITH RIBS	BACKSHELL WITHOUT RIBS	90^0 ADAPTOR WITH RIBS	90^0 ADAPTOR WITHOUT RIBS
MX150 ASSY RCP 2X8 BK A/6	334721988	A-BLACK	GCP	PLR		M	R	-	2	-	-	-	6	7	-	SALEABLE		N/A	N/A	N/A	N/A
								9	10	11	-	13	14	15	16						
MX150 ASSY RCP 2X8 BK A/14	334721989	A-BLACK	GCP	PLR		M	R	-	-	-	-	-	-	-	-	SALEABLE		N/A	N/A	N/A	N/A
								-	-	-	-	13	-	-	16						
MX150 ASSY RCP 2X8 BK A/12	334721990	A-BLACK	GCP	PLR		M	R	-	-	-	-	-	-	-	-	SALEABLE		N/A	N/A	N/A	N/A
								-	-	11	12	13	-	-	16						
MX150 ASSY RCP 2X8 BK A/15	334721991	A-BLACK	GCP	PLR		M	R	1	-	-	-	-	-	-	-	SALEABLE		N/A	N/A	N/A	N/A
								-	-	-	-	-	-	-	-						
MX150 ASSY RCP 2X8 BK A/11	334721992	A-BLACK	GCP	PLR		M	R	-	-	-	-	-	6	-	-	SALEABLE		N/A	N/A	N/A	N/A
								-	-	11	12	13	14	-	-						
MX150 ASSY RCP 2X8 BK A/9	334721993	A-BLACK	GCP	PLR		M	R	-	-	3	4	5	6	7	-	SALEABLE		N/A	N/A	N/A	N/A
								9	-	-	-	-	-	-	16						
MX150 ASSY RCP 2X8 BK A/6	334721994	A-BLACK	GCP	PLR		M	R	-	2	-	4	5	6	-	-	SALEABLE		N/A	N/A	N/A	N/A
								9	10	-	12	13	14	-	16						
MX150 ASSY RCP 2X8 BK A/5	334721995	A-BLACK	GCP	PLR		M	R	-	2	-	4	5	6	7	-	SALEABLE		N/A	N/A	N/A	N/A
								9	10	-	12	13	14	-	16						
MX150 ASSY RCP 2X8 BK A/6	334721996	A-BLACK	GCP	PLR		M	R	1	2	-	-	-	6	7	8	SALEABLE		N/A	N/A	N/A	N/A
								9	10	-	-	-	14	15	16						
MX150 ASSY RCP 2X8 BK A/8	334721997	A-BLACK	GCP	PLR		M	R	1	2	-	-	-	-	7	8	SALEABLE		N/A	N/A	N/A	N/A
								9	10	-	-	-	-	15	16						
MX150 ASSY RCP 2X8 BK A/4	334721998	A-BLACK	GCP	PLR		M	R	-	-	3	4	5	6	7	8	SALEABLE		N/A	N/A	N/A	N/A
								-	-	11	12	13	14	15	16						
MX150 ASSY RCP 2X8 BK A/12	334721999	A-BLACK	GCP	PLR		M	R	-	-	-	-	-	-	7	8	SALEABLE		N/A	N/A	N/A	N/A
								-	-	-	-	-	-	15	16						
MX150 ASSY RCP 2X8 CS BK A/16	334723001	A-BLACK-CLIP	GCO	PLR		M	R	-	-	-	-	-	-	-	-	SALEABLE		34951-1611	34951-1621	34951-1631	34951-1641
								-	-	-	-	-	-	-	-						
MX150 ASSY RCP 2X8 CS LG B/16	334723002	B-LIGHT GRAY-CLIP	GCO	PLR		M	R	-	-	-	-	-	-	-	-	SALEABLE		34951-1611	34951-1621	34951-1631	34951-1641
								-	-	-	-	-	-	-	-						
MX150 ASSY RCP 2X8 CS DG C/16	334723003	C-DARK GRAY-CLIP	GCO	PLR		M	R	-	-	-	-	-	-	-	-	SALEABLE		34951-1611	34951-1621	34951-1631	34951-1641
								-	-	-	-	-	-	-	-						
MX150 ASSY RCP 2X8 CS SG D/16	334723004	D-STONE GRAY-CLIP	GCO	PLR		M	R	-	-	-	-	-	-	-	-	SALEABLE		34951-1611	34951-1621	34951-1631	34951-1641
								-	-	-	-	-	-	-	-						
MX150 ASSY RCP 2X8 CS CPA BK A/16	334723005	A-BLACK-CLIP	GCO	PLR	CPA	M	R	-	-	-	-	-	-	-	-	SALEABLE		34951-1611	34951-1621	34951-1631	34951-1641
								-	-	-	-	-	-	-	-						
MX150 ASSY RCP 2X8 CS CPA LG B/16	334723006	B-LIGHT GRAY-CLIP	GCO	PLR	CPA	M	R	-	-	-	-	-	-	-	-	SALEABLE		34951-1611	34951-1621	34951-1631	34951-1641
								-	-	-	-	-	-	-	-						
MX150 ASSY RCP 2X8 CS CPA DG C/16	334723007	C-DARK GRAY-CLIP	GCO	PLR	CPA	M	R	-	-	-	-	-	-	-	-	SALEABLE		34951-1611	34951-1621	34951-1631	34951-1641
								-	-	-	-	-	-	-	-						
MX150 ASSY RCP 2X8 CS CPA SG D/16	334723008	D-STONE GRAY-CLIP	GCO	PLR	CPA	M	R	-	-	-	-	-	-	-	-	SALEABLE		34951-1611	34951-1621	34951-1631	34951-1641
								-	-	-	-	-	-	-	-						
MX150 ASSY RCP 2X8 CS BK A/13	334723009	A-BLACK-CLIP	GCP	PLR		M	R	-	-	-	-	-	-	-	-	SALEABLE		34951-1611	34951-1621	34951-1631	34951-1641
								-	-	-	-	-	14	15	16						
MX150 ASSY RCP 2X8 CS BK A/9	334723010	A-BLACK-CLIP	GCP	PLR		M	R	-	-	3	4	-	-	7	8	SALEABLE		34951-1611	34951-1621	34951-1631	34951-1641
								9	-	-	-	-	-	15	16						
MX150 ASSY RCP 2X8 CS CPA BK A/11	334723011	A-BLACK-CLIP	GCP	PLR	CPA	M	R	-	-	3	4	-	-	-	-	SALEABLE		34951-1611	34951-1621	34951-1631	34951-1641
								-	-	-	-	-	14	15	16						
MX150 ASSY RCP 2X8 CS BK A/10	334723012	A-BLACK-CLIP	GCP	PLR		M	R	1	-	-	-	5	-	-	8	SALEABLE		34951-1611	34951-1621	34951-1631	34951-1641
								9	10	-	-	-	-	-	16						
MX150 ASSY RCP 2X8 CS CPA BK A/12	334723013	A-BLACK-CLIP	GCP	PLR	CPA	M	R	-	-	3	-	-	-	-	-	SALEABLE		34951-1611	34951-1621	34951-1631	34951-1641
								-	-	-	-	-	14	15	16						
MX150 ASSY RCP 2X8 CS CPA DG C/15	334723014	C-DARK GRAY-CLIP	GCP	PLR	CPA	M	R	1	-	-	-	-	-	-	-	SALEABLE		34951-1611	34951-1621	34951-1631	34951-1641
								-	-	-	-	-	-	-	-						
MX150 ASSY RCP 2X8 CS SG D/15	334723015	D-STONE GRAY-CLIP	GCP	PLR		M	R	1	-	-	-	-	-	-	-	SALEABLE		34951-1611	34951-1621	34951-1631	34951-1641
								-	-	-	-	-	-	-	-						

molex

MX150 RECEPTACLE 2X8 SEALED ASSEMBLY MAT SEAL
BOM AND PIN OUT SHEET

ASSEMBLY DESCRIPTION	ASSEMBLY PART NUMBER	COMPONENT						BLOCKED TERMINALS								STATUS	COMMENT	OPTIONAL ATTACHMENTS SOLD SEPARATELY			
		THE PRESENCE OF AN ABBREVIATION INDICATES THE PRESENCE OF THAT COMPONENT						CAVITY WITH A NUMBER INDICATES BLOCKED TERMINAL POSITION CAVITY WITHOUT A NUMBER INDICATES OPEN TERMINAL POSITION													
		HOUSING KEY/COLOR	GROMMET CAP	PLR	CPA	MAT SEAL	RING SEAL											BACKSHELL WITH RIBS	BACKSHELL WITHOUT RIBS	90^0 ADAPTOR WITH RIBS	90^0 ADAPTOR WITHOUT RIBS
MX150 ASSY RCP 2X8 CS DG C/15	334723016	C-DARK GRAY-CLIP	GCP	PLR		M	R	1	-	-	-	-	-	-	-	SALEABLE		34951-1611	34951-1621	34951-1631	34951-1641
								-	-	-	-	-	-	-	-						
MX150 ASSY RCP 2X8 CS CPA SG D/15	334723019	D-STONE GRAY-CLIP	GCP	PLR	CPA	M	R	1	-	-	-	-	-	-	-	SALEABLE		34951-1611	34951-1621	34951-1631	34951-1641
								-	-	-	-	-	-	-	-						
MX150 ASSY RCP 2X8 CS BK A/15	334723020	A-BLACK-CLIP	GCP	PLR		M	R	-	-	-	-	-	-	-	-	SALEABLE		34951-1611	34951-1621	34951-1631	34951-1641
								-	-	-	-	-	-	-	16						
MX150 ASSY RCP 2X8 CS LG B/6	334723021	B-LIGHT GRAY-CLIP	GCP	PLR		M	R	1	2	-	4	5	6	7	-	SALEABLE		34951-1611	34951-1621	34951-1631	34951-1641
								-	-	11	-	-	14	15	16						
MX150 ASSY RCP 2X8 CS BK A/7	334723022	A-BLACK-CLIP	GCP	PLR		M	R	-	-	3	-	-	6	7	8	SALEABLE		34951-1611	34951-1621	34951-1631	34951-1641
								-	10	11	-	-	14	15	16						
MX150 ASSY RCP 2X8 CS BK A/13	334723023	A-BLACK-CLIP	GCP	PLR		M	R	-	-	-	-	-	-	-	8	SALEABLE		34951-1611	34951-1621	34951-1631	34951-1641
								-	10	-	12	-	-	-	-						
MX150 ASSY RCP 2X8 CS LG B/7	334723024	B-LIGHT GRAY-CLIP	GCP	PLR		M	R	-	2	-	4	5	6	7	-	SALEABLE		34951-1611	34951-1621	34951-1631	34951-1641
								-	-	11	-	-	14	15	16						
MX150 ASSY RCP 2X8 CS BK A/13	334723025	A-BLACK-CLIP	GCP	PLR		M	R	-	-	-	-	-	6	-	-	SALEABLE		34951-1611	34951-1621	34951-1631	34951-1641
								-	10	-	-	-	-	15	-						
MX150 ASSY RCP 2X8 CS LG B/4	334723026	B-LIGHT GRAY-CLIP	GCP	PLR		M	R	1	2	-	4	5	6	7	-	SALEABLE		34951-1611	34951-1621	34951-1631	34951-1641
								9	10	11	-	-	14	15	16						
MX150 ASSY RCP 2X8 CS LG B/10	334723028	B-LIGHT GRAY-CLIP	GCP	PLR		M	R	-	2	-	4	5	6	-	-	SALEABLE		34951-1611	34951-1621	34951-1631	34951-1641
								-	-	-	12	13	-	-	-						
MX150 ASSY RCP 2X8 CS LG B/14	334723029	B-LIGHT GRAY-CLIP	GCP	PLR		M	R	-	-	-	-	-	-	-	-	SALEABLE		34951-1611	34951-1621	34951-1631	34951-1641
								-	-	-	12	13	-	-	-						
MX150 ASSY RCP 2X8 CS CPA BK A/11	334723031	A-BLACK-CLIP	GCP	PLR	CPA	M	R	-	-	3	-	-	-	-	-	SALEABLE		34951-1611	34951-1621	34951-1631	34951-1641
								-	-	-	-	13	14	15	16						
MX150 ASSY RCP 2X8 CS CPA BK A/13	334723032	A-BLACK-CLIP	GCP	PLR	CPA	M	R	-	-	-	-	-	-	-	-	SALEABLE		34951-1611	34951-1621	34951-1631	34951-1641
								-	-	-	-	-	14	15	16						
MX150 ASSY RCP 2X8 CS BK A/15	334723033	A-BLACK-CLIP	GCP	PLR		M	R	-	-	-	-	5	-	-	-	SALEABLE		34951-1611	34951-1621	34951-1631	34951-1641
								-	-	-	-	-	-	-	-						
MX150 ASSY RCP 2X8 CS BK A/10	334723034	A-BLACK-CLIP	GCP	PLR		M	R	1	2	3	-	-	-	-	8	SALEABLE		34951-1611	34951-1621	34951-1631	34951-1641
								9	-	-	-	-	-	-	16						
MX150 ASSY RCP 2X8 CS BK A/9	334723035	A-BLACK-CLIP	GCP	PLR		M	R	-	-	-	4	5	6	-	8	SALEABLE		34951-1611	34951-1621	34951-1631	34951-1641
								-	-	11	-	13	-	15	-						
MX150 ASSY RCP 2X8 CS BK A/12	334723036	A-BLACK-CLIP	GCP	PLR		M	R	-	2	3	-	-	-	7	8	SALEABLE		34951-1611	34951-1621	34951-1631	34951-1641
								-	-	-	-	-	-	-	-						
MX150 ASSY RCP 2X8 CS CPA BK A/13	334723037	A-BLACK-CLIP	GCP	PLR	CPA	M	R	-	-	-	-	-	-	7	-	SALEABLE		34951-1611	34951-1621	34951-1631	34951-1641
								-	-	-	-	13	-	15	-						
MX150 ASSY RCP 2X8 CS CPA LG B/11	334723038	B-LIGHT GRAY-CLIP	GCP	PLR	CPA	M	R	-	-	-	-	-	6	7	8	SALEABLE		34951-1611	34951-1621	34951-1631	34951-1641
								-	-	11	-	13	-	-	-						
MX150 ASSY RCP 2X8 CS CPA BK A/9	334723039	A-BLACK-CLIP	GCP	PLR	CPA	M	R	-	-	-	-	-	6	-	8	SALEABLE		34951-1611	34951-1621	34951-1631	34951-1641
								9	10	11	12	-	-	-	16						
MX150 ASSY RCP 2X8 CS CPA BK A/14	334723040	A-BLACK-CLIP	GCP	PLR	CPA	M	R	-	-	-	-	5	-	-	-	SALEABLE		34951-1611	34951-1621	34951-1631	34951-1641
								-	-	-	-	13	-	-	-						
MX150 ASSY RCP 2X8 CS CPA BK A/6	334723041	A-BLACK-CLIP	GCP	PLR	CPA	M	R	1	-	3	4	5	-	7	-	SALEABLE		34951-1611	34951-1621	34951-1631	34951-1641
								-	-	11	12	13	14	15	-						
MX150 ASSY RCP 2X8 CS BK A/12	334723042	A-BLACK-CLIP	GCP	PLR		M	R	-	-	-	-	-	-	-	-	SALEABLE		34951-1611	34951-1621	34951-1631	34951-1641
								9	10	11	-	-	-	-	16						
MX150 ASSY RCP 2X8 CS BK A/10	334723043	A-BLACK-CLIP	GCP	PLR		M	R	-	2	-	-	-	-	-	8	SALEABLE		34951-1611	34951-1621	34951-1631	34951-1641
								9	10	11	-	-	-	-	16						
MX150 ASSY RCP 2X8 CS BK A/12	334723044	A-BLACK-CLIP	GCP	PLR		M	R	-	-	-	-	-	6	-	-	SALEABLE		34951-1611	34951-1621	34951-1631	34951-1641
								-	-	-	-	13	14	15	-						
MX150 ASSY RCP 2X8 CS BK A/8	334723045	A-BLACK-CLIP	GCP	PLR		M	R	1	-	3	-	-	-	-	8	SALEABLE		34951-1611	34951-1621	34951-1631	34951-1641
								9	-	-	12	13	14	15	-						
MX150 ASSY RCP 2X8 CS BK A/2	334723046	A-BLACK-CLIP	GCP	PLR		M	R	1	2	3	4	5	6	7	8	SALEABLE		34951-1611	34951-1621	34951-1631	34951-1641
								9	10	-	12	13	14	15	-						

molex

MX150 RECEPTACLE 2X8 SEALED ASSEMBLY MAT SEAL
BOM AND PIN OUT SHEET

ASSEMBLY DESCRIPTION	ASSEMBLY PART NUMBER	COMPONENT						BLOCKED TERMINALS								STATUS	COMMENT	OPTIONAL ATTACHMENTS SOLD SEPARATELY			
		THE PRESENCE OF AN ABBREVIATION INDICATES THE PRESENCE OF THAT COMPONENT						CAVITY WITH A NUMBER INDICATES BLOCKED TERMINAL POSITION CAVITY WITHOUT A NUMBER INDICATES OPEN TERMINAL POSITION													
		HOUSING KEY/COLOR	GROMMET CAP	PLR	CPA	MAT SEAL	RING SEAL											BACKSHELL WITH RIBS	BACKSHELL WITHOUT RIBS	90^0 ADAPTOR WITH RIBS	90^0 ADAPTOR WITHOUT RIBS
MX150 ASSY RCP 2X8 CS BK A/11	334723047	A-BLACK-CLIP	GCP	PLR		M	R	-	-	-	-	-	-	-	-	SALEABLE		34951-1611	34951-1621	34951-1631	34951-1641
								-	10	11	-	13	14	15	-						
MX150 ASSY RCP 2X8 CS BK A/9	334723048	A-BLACK-CLIP	GCP	PLR		M	R	1	-	-	-	-	-	-	8	SALEABLE		34951-1611	34951-1621	34951-1631	34951-1641
								-	10	11	-	13	14	15	-						
MX150 ASSY RCP 2X8 CS BK A/11	334723049	A-BLACK-CLIP	GCP	PLR		M	R	1	-	-	-	-	-	-	8	SALEABLE		34951-1611	34951-1621	34951-1631	34951-1641
								-	-	-	-	13	14	15	-						
MX150 ASSY RCP 2X8 CS BK A/12	334723050	A-BLACK-CLIP	GCP	PLR		M	R	-	2	-	-	-	-	-	-	SALEABLE		34951-1611	34951-1621	34951-1631	34951-1641
								-	-	-	-	13	-	15	16						
MX150 ASSY RCP 2X8 CS BK A/12	334723051	A-BLACK-CLIP	GCP	PLR		M	R	-	-	-	-	-	-	-	-	SALEABLE		34951-1611	34951-1621	34951-1631	34951-1641
								-	-	11	12	-	-	15	16						
MX150 ASSY RCP 2X8 CS BK A/13	334723052	A-BLACK-CLIP	GCP	PLR		M	R	-	-	-	-	-	-	-	-	SALEABLE		34951-1611	34951-1621	34951-1631	34951-1641
								-	-	-	-	13	14	15	-						
MX150 ASSY RCP 2X8 CS BK A/10	334723053	A-BLACK-CLIP	GCP	PLR		M	R	-	2	-	-	-	-	-	-	SALEABLE		34951-1611	34951-1621	34951-1631	34951-1641
								-	-	11	12	13	-	15	16						
MX150 ASSY RCP 2X8 CS BK A/8	334723054	A-BLACK-CLIP	GCP	PLR		M	R	-	-	3	-	-	6	-	-	SALEABLE		34951-1611	34951-1621	34951-1631	34951-1641
								9	-	11	-	13	14	15	16						
MX150 ASSY RCP 2X8 CS BK A/7	334723055	A-BLACK-CLIP	GCP	PLR		M	R	-	-	-	-	5	6	7	-	SALEABLE		34951-1611	34951-1621	34951-1631	34951-1641
								9	10	11	-	13	14	15	-						
MX150 ASSY RCP 2X8 CS BK A/8	334723056	A-BLACK-CLIP	GCP	PLR		M	R	-	2	-	4	5	-	-	8	SALEABLE		34951-1611	34951-1621	34951-1631	34951-1641
								-	-	-	-	13	14	15	16						
MX150 ASSY RCP 2X8 CS BK A/9	334723057	A-BLACK-CLIP	GCP	PLR		M	R	-	-	-	-	-	6	-	-	SALEABLE		34951-1611	34951-1621	34951-1631	34951-1641
								-	-	11	12	13	14	15	16						
MX150 ASSY RCP 2X8 CS BK A/5	334723058	A-BLACK-CLIP	GCP	PLR		M	R	-	2	-	4	5	-	-	8	SALEABLE		34951-1611	34951-1621	34951-1631	34951-1641
								-	10	11	12	13	14	15	16						
MX150 ASSY RCP 2X8 CS BK A/10	334723059	A-BLACK-CLIP	GCP	PLR		M	R	-	-	-	-	-	-	-	-	SALEABLE		34951-1611	34951-1621	34951-1631	34951-1641
								9	-	11	12	13	14	15	-						
MX150 ASSY RCP 2X8 CS BK A/8	334723060	A-BLACK-CLIP	GCP	PLR		M	R	-	-	-	-	-	-	-	8	SALEABLE		34951-1611	34951-1621	34951-1631	34951-1641
								-	10	11	12	13	14	15	16						
MX150 ASSY RCP 2X8 CS BK A/10	334723061	A-BLACK-CLIP	GCP	PLR		M	R	-	-	-	-	-	6	-	-	SALEABLE		34951-1611	34951-1621	34951-1631	34951-1641
								-	-	11	-	13	14	15	16						
MX150 ASSY RCP 2X8 CS CPA BK A/10	334723062	A-BLACK-CLIP	GCP	PLR	CPA	M	R	1	2	3	-	-	-	-	8	SALEABLE		34951-1611	34951-1621	34951-1631	34951-1641
								9	-	-	-	-	-	-	16						
MX150 ASSY RCP 2X8 CS CPA BK A/15	334723063	A-BLACK-CLIP	GCP	PLR	CPA	M	R	-	-	-	-	-	-	-	-	SALEABLE		34951-1611	34951-1621	34951-1631	34951-1641
								-	-	-	-	-	-	-	16						
MX150 ASSY RCP 2X8 CS CPA BK A/12	334723064	A-BLACK-CLIP	GCP	PLR	CPA	M	R	-	-	-	-	-	-	-	-	SALEABLE		34951-1611	34951-1621	34951-1631	34951-1641
								-	-	-	12	13	14	15	-						
MX150 ASSY RCP 2X8 CS BK A/12	334723065	A-BLACK-CLIP	GCP	PLR		M	R	-	-	-	-	-	-	-	-	SALEABLE		34951-1611	34951-1621	34951-1631	34951-1641
								-	-	-	12	13	14	15	-						
MX150 ASSY RCP 2X8 CS CPA BK A/12	334723066	A-BLACK-CLIP	GCP	PLR	CPA	M	R	1	-	-	-	-	-	-	-	SALEABLE		34951-1611	34951-1621	34951-1631	34951-1641
								9	10	-	-	13	-	-	-						
MX150 ASSY RCP 2X8 CS CPA BK A/12	334723067	A-BLACK-CLIP	GCP	PLR	CPA	M	R	-	-	-	-	-	-	-	-	SALEABLE		34951-1611	34951-1621	34951-1631	34951-1641
								-	-	-	-	13	14	15	16						
MX150 ASSY RCP 2X8 CS BK A/12	334723068	A-BLACK-CLIP	GCP	PLR		M	R	-	-	-	-	-	-	-	-	SALEABLE		34951-1611	34951-1621	34951-1631	34951-1641
								-	-	-	-	13	14	15	16						
MX150 ASSY RCP 2X8 CPA BK A/3	334728001	A-BLACK	GCP	PLR	CPA	M	R	1	2	3	4	5	6	-	-	SALEABLE		N/A	N/A	N/A	N/A
								-	10	11	12	13	14	15	16						
MX150 ASSY RCP 2X8 CPA BK A/11	334728002	A-BLACK	GCP	PLR	CPA	M	R	-	-	-	-	-	-	-	-	SALEABLE		N/A	N/A	N/A	N/A
								-	10	-	-	13	14	15	16						
MX150 ASSY RCP 2X8 CPA BK A/8	334728003	A-BLACK	GCP	PLR	CPA	M	R	1	2	3	4	5	6	-	-	SALEABLE		N/A	N/A	N/A	N/A
								-	-	11	12	-	-	-	-						
MX150 ASSY RCP 2X8 BK A/10	334728004	A-BLACK	GCP	PLR		M	R	-	2	-	-	5	-	7	-	SALEABLE		N/A	N/A	N/A	N/A
								9	-	11	-	-	-	-	16						
MX150 ASSY RCP 2X8 BK A/6	334728005	A-BLACK	GCP	PLR		M	R	1	2	3	4	5	6	7	8	SALEABLE		N/A	N/A	N/A	N/A
								-	-	11	-	-	-	-	16						

molex

MX150 RECEPTACLE 2X8 SEALED ASSEMBLY MAT SEAL
BOM AND PIN OUT SHEET

ASSEMBLY DESCRIPTION	ASSEMBLY PART NUMBER	COMPONENT						BLOCKED TERMINALS								STATUS	COMMENT	OPTIONAL ATTACHMENTS SOLD SEPARATELY			
		THE PRESENCE OF AN ABBREVIATION INDICATES THE PRESENCE OF THAT COMPONENT						CAVITY WITH A NUMBER INDICATES BLOCKED TERMINAL POSITION CAVITY WITHOUT A NUMBER INDICATES OPEN TERMINAL POSITION													
		HOUSING KEY/COLOR	GROMMET CAP	PLR	CPA	MAT SEAL	RING SEAL											BACKSHELL WITH RIBS	BACKSHELL WITHOUT RIBS	90^0 ADAPTOR WITH RIBS	90^0 ADAPTOR WITHOUT RIBS
MX150 ASSY RCP 2X8 BK A/9	334728006	A-BLACK	GCP	PLR		M	R	1	-	-	4	5	6	7	8	SALEABLE		N/A	N/A	N/A	N/A
								-	-	11	-	-	-	-	-						
MX150 ASSY RCP 2X8 BK A/11	334728007	A-BLACK	GCP	PLR		M	R	1	-	-	4	5	6	7	-	SALEABLE		N/A	N/A	N/A	N/A
								-	-	-	-	-	-	-	-						
MX150 ASSY RCP 2X8 CPA BK A/8	334728008	A-BLACK	GCP	PLR	CPA	M	R	1	2	3	4	5	6	-	-	SALEABLE		N/A	N/A	N/A	N/A
								-	-	-	12	13	-	-	-						
MX150 ASSY RCP 2X8 CPA BK A/11	334728009	A-BLACK	GCP	PLR	CPA	M	R	-	-	-	-	-	-	7	8	SALEABLE		N/A	N/A	N/A	N/A
								-	-	-	-	-	14	15	16						
MX150 ASSY RCP 2X8 CPA BK A/3	334728010	A-BLACK	GCP	PLR	CPA	M	R	1	2	3	4	5	6	7	8	SALEABLE		N/A	N/A	N/A	N/A
								-	-	-	12	13	14	15	16						
MX150 ASSY RCP 2X8 CPA BK A/13	334728011	A-BLACK	GCP	PLR	CPA	M	R	-	-	-	4	-	-	-	-	SALEABLE		N/A	N/A	N/A	N/A
								9	-	-	12	-	-	-	-						
MX150 ASSY RCP 2X8 CPA BK A/12	334728012	A-BLACK	GCP	PLR	CPA	M	R	-	-	-	4	-	-	-	-	SALEABLE		N/A	N/A	N/A	N/A
								9	10	-	12	-	-	-	-						
MX150 ASSY RCP 2X8 CPA BK A/8	334728013	A-BLACK	GCP	PLR	CPA	M	R	1	2	-	4	-	6	7	8	SALEABLE		N/A	N/A	N/A	N/A
								9	-	-	12	-	-	-	-						
MX150 ASSY RCP 2X8 CPA BK A/10	334728014	A-BLACK	GCP	PLR	CPA	M	R	-	-	3	4	-	-	-	-	SALEABLE		N/A	N/A	N/A	N/A
								9	10	-	-	13	14	-	-						
MX150 ASSY RCP 2X8 BK A/13	334728015	A-BLACK	GCP	PLR		M	R	1	-	-	-	-	-	-	8	SALEABLE		N/A	N/A	N/A	N/A
								-	-	11	-	-	-	-	-						
MX150 ASSY RCP 2X8 BK A/11	334728016	A-BLACK	GCP	PLR		M	R	-	-	-	-	-	-	-	-	SALEABLE		N/A	N/A	N/A	N/A
								-	10	11	12	13	-	-	16						
MX150 ASSY RCP 2X8 BK A/5	334728017	A-BLACK	GCP	PLR		M	R	1	2	-	4	5	6	7	8	SALEABLE		N/A	N/A	N/A	N/A
								-	10	-	-	-	14	15	16						
MX150 ASSY RCP 2X8 BK A/10	334728018	A-BLACK	GCP	PLR		M	R	1	-	-	-	5	6	-	-	SALEABLE		N/A	N/A	N/A	N/A
								-	10	-	-	13	14	-	-						
MX150 ASSY RCP 2X8 BK A/7	334728019	A-BLACK	GCP	PLR		M	R	-	-	-	4	5	-	7	8	SALEABLE		N/A	N/A	N/A	N/A
								-	-	11	12	13	14	15	-						
MX150 ASSY RCP 2X8 BK A/10	334728020	A-BLACK	GCP	PLR		M	R	-	-	-	-	-	-	7	8	SALEABLE		N/A	N/A	N/A	N/A
								9	-	-	-	-	14	15	16						
MX150 ASSY RCP 2X8 CPA BK A/15	334728021	A-BLACK	GCP	PLR	CPA	M	R	-	-	-	-	-	-	-	-	SALEABLE		N/A	N/A	N/A	N/A
								-	-	-	-	-	-	-	16						
MX150 ASSY RCP 2X8 CPA BK A/9	334728022	A-BLACK	GCP	PLR	CPA	M	R	-	-	-	-	-	-	-	-	SALEABLE		N/A	N/A	N/A	N/A
								-	10	11	12	13	14	15	16						
MX150 ASSY RCP 2X8 CPA BK A/11	334728023	A-BLACK	GCP	PLR	CPA	M	R	-	-	-	-	-	-	-	-	SALEABLE		N/A	N/A	N/A	N/A
								-	10	11	12	13	-	-	16						
MX150 ASSY RCP 2X8 CPA BK A/13	334728024	A-BLACK	GCP	PLR	CPA	M	R	-	-	-	-	-	-	-	-	SALEABLE		N/A	N/A	N/A	N/A
								-	-	-	-	-	14	15	16						
MX150 ASSY RCP 2X8 CPA BK A/6	334728025	A-BLACK	GCP	PLR	CPA	M	R	-	-	-	-	-	-	7	8	SALEABLE		N/A	N/A	N/A	N/A
								9	10	11	12	13	14	15	16						
MX150 ASSY RCP 2X8 CPA BK A/10	334728026	A-BLACK	GCP	PLR	CPA	M	R	-	-	-	-	-	-	-	-	SALEABLE		N/A	N/A	N/A	N/A
								-	-	11	12	13	14	15	16						
MX150 ASSY RCP 2X8 CPA BK A/12	334728027	A-BLACK	GCP	PLR	CPA	M	R	-	-	-	-	-	-	-	-	SALEABLE		N/A	N/A	N/A	N/A
								-	-	-	-	13	14	15	16						
MX150 ASSY RCP 2X8 CPA BK A/4	334728028	A-BLACK	GCP	PLR	CPA	M	R	1	2	3	4	5	6	-	-	SALEABLE		N/A	N/A	N/A	N/A
								-	-	11	12	13	14	15	16						
MX150 ASSY RCP 2X8 BK A/8	334728029	A-BLACK	GCP	PLR		M	R	1	2	-	4	-	6	7	8	SALEABLE		N/A	N/A	N/A	N/A
								-	-	11	12	-	-	-	-						
MX150 ASSY RCP 2X8 BK A/9	334728030	A-BLACK	GCP	PLR		M	R	-	2	-	4	-	6	7	8	SALEABLE		N/A	N/A	N/A	N/A
								-	-	-	12	-	-	-	16						
MX150 ASSY RCP 2X8 BK A/8	334728031	A-BLACK	GCP	PLR		M	R	-	-	3	-	-	-	-	8	SALEABLE		N/A	N/A	N/A	N/A
								-	-	11	12	13	14	15	16						
MX150 ASSY RCP 2X8 BK A/2	334728032	A-BLACK	GCP	PLR		M	R	1	2	3	4	5	6	7	8	SALEABLE		N/A	N/A	N/A	N/A
								-	10	11	12	13	14	15	-						

molex

MX150 RECEPTACLE 2X8 SEALED ASSEMBLY MAT SEAL
BOM AND PIN OUT SHEET

ASSEMBLY DESCRIPTION	ASSEMBLY PART NUMBER	COMPONENT						BLOCKED TERMINALS								STATUS	COMMENT	OPTIONAL ATTACHMENTS SOLD SEPARATELY			
		THE PRESENCE OF AN ABBREVIATION INDICATES THE PRESENCE OF THAT COMPONENT						CAVITY WITH A NUMBER INDICATES BLOCKED TERMINAL POSITION CAVITY WITHOUT A NUMBER INDICATES OPEN TERMINAL POSITION													
		HOUSING KEY/COLOR	GROMMET CAP	PLR	CPA	MAT SEAL	RING SEAL											BACKSHELL WITH RIBS	BACKSHELL WITHOUT RIBS	90^0 ADAPTOR WITH RIBS	90^0 ADAPTOR WITHOUT RIBS
MX150 ASSY RCP 2X8 CPA BK A/8	334728033	A-BLACK	GCP	PLR	CPA	M	R	-	-	-	-	-	-	7	8	SALEABLE		N/A	N/A	N/A	N/A
								9	10	-	-	13	14	15	16						
MX150 ASSY RCP 2X8 BK A/3	334728034	A-BLACK	GCP	PLR		M	R	1	2	3	4	5	6	7	8	SALEABLE		N/A	N/A	N/A	N/A
								9	10	11	-	-	-	15	16						
MX150 ASSY RCP 2X8 BK A/10	334728035	A-BLACK	GCP	PLR		M	R	-	-	3	-	5	-	-	8	SALEABLE		N/A	N/A	N/A	N/A
								-	10	11	-	-	14	-	-						
MX150 ASSY RCP 2X8 BK A/12	334728036	A-BLACK	GCP	PLR		M	R	-	-	-	-	-	-	-	-	SALEABLE		N/A	N/A	N/A	N/A
								-	10	11	-	13	-	-	16						
MX150 ASSY RCP 2X8 CPA BK A/14	334728037	A-BLACK	GCP	PLR	CPA	M	R	-	-	-	-	-	-	7	-	SALEABLE		N/A	N/A	N/A	N/A
								-	-	-	-	-	-	-	16						
MX150 ASSY RCP 2X8 BK A/7	334728038	A-BLACK	GCP	PLR		M	R	-	2	-	-	-	-	7	-	SALEABLE		N/A	N/A	N/A	N/A
								9	10	11	12	13	14	-	16						
MX150 ASSY RCP 2X8 BK A/5	334728039	A-BLACK	GCP	PLR		M	R	1	2	-	-	-	-	7	8	SALEABLE		N/A	N/A	N/A	N/A
								9	10	11	12	13	14	-	16						
MX150 ASSY RCP 2X8 BK A/9	334728040	A-BLACK	GCP	PLR		M	R	-	2	-	-	-	-	7	8	SALEABLE		N/A	N/A	N/A	N/A
								-	-	-	-	13	14	15	16						
MX150 ASSY RCP 2X8 LG B/11	334728041	B-LIGHT GRAY	GCP	PLR		M	R	-	-	-	-	5	-	-	-	SALEABLE		N/A	N/A	N/A	N/A
								-	-	-	-	13	14	15	16						
MX150 ASSY RCP 2X8 BK A/7	334728042	A-BLACK	GCP	PLR		M	R	-	-	-	-	5	-	-	-	SALEABLE		N/A	N/A	N/A	N/A
								9	10	11	12	13	14	15	16						
MX150 ASSY RCP 2X8 BK A/10	334728043	A-BLACK	GCP	PLR		M	R	-	-	-	-	-	-	-	-	SALEABLE		N/A	N/A	N/A	N/A
								-	10	11	12	13	14	-	16						
MX150 ASSY RCP 2X8 BK A/9	334728044	A-BLACK	GCP	PLR		M	R	-	-	-	-	-	6	7	-	SALEABLE		N/A	N/A	N/A	N/A
								9	10	-	-	13	14	15	-						
MX150 ASSY RCP 2X8 BK A/4	334728045	A-BLACK	GCP	PLR		M	R	1	2	3	4	5	6	7	-	SALEABLE		N/A	N/A	N/A	N/A
								9	-	-	12	13	-	15	16						
MX150 ASSY RCP 2X8 BK A/8	334728046	A-BLACK	GCP	PLR		M	R	1	2	3	-	-	-	7	-	SALEABLE		N/A	N/A	N/A	N/A
								9	-	-	12	13	-	-	16						
MX150 ASSY RCP 2X8 BK A/11	334728047	A-BLACK	GCP	PLR		M	R	-	2	-	-	5	-	-	-	SALEABLE		N/A	N/A	N/A	N/A
								9	-	-	12	13	-	-	-						
MX150 ASSY RCP 2X8 BK A/11	334728048	A-BLACK	GCP	PLR		M	R	-	-	-	4	-	6	7	-	SALEABLE		N/A	N/A	N/A	N/A
								9	-	-	-	-	-	-	16						
MX150 ASSY RCP 2X8 BK A/14	334728049	A-BLACK	GCP	PLR		M	R	-	-	-	4	-	-	-	-	SALEABLE		N/A	N/A	N/A	N/A
								-	-	-	-	-	-	-	16						
MX150 ASSY RCP 2X8 BK A/13	334728050	A-BLACK	GCP	PLR		M	R	-	-	-	4	-	-	-	-	SALEABLE		N/A	N/A	N/A	N/A
								9	-	-	-	-	-	-	16						
MX150 ASSY RCP 2X8 BK A/9	334728051	A-BLACK	GCP	PLR		M	R	-	-	-	-	-	-	7	-	SALEABLE		N/A	N/A	N/A	N/A
								9	10	-	-	13	14	15	16						
MX150 ASSY RCP 2X8 BK A/10	334728052	A-BLACK	GCP	PLR		M	R	-	-	-	-	-	-	7	-	SALEABLE		N/A	N/A	N/A	N/A
								9	10	-	-	13	-	15	16						
MX150 ASSY RCP 2X8 BK A/8	334728053	A-BLACK	GCP	PLR		M	R	-	-	-	-	-	-	7	-	SALEABLE		N/A	N/A	N/A	N/A
								9	10	11	-	13	14	15	16						
MX150 ASSY RCP 2X8 CPA BK A/8	334728054	A-BLACK	GCP	PLR	CPA	M	R	-	-	-	-	-	-	7	8	SALEABLE		N/A	N/A	N/A	N/A
								9	-	11	12	-	14	15	16						
MX150 ASSY RCP 2X8 CPA BK A/14	334728055	A-BLACK	GCP	PLR	CPA	M	R	1	2	-	-	-	-	-	-	SALEABLE		N/A	N/A	N/A	N/A
								-	-	-	-	-	-	-	-						
MX150 ASSY RCP 2X8 CPA LG B/11	334728056	B-LIGHT GRAY	GCP	PLR	CPA	M	R	-	-	-	-	-	-	7	8	SALEABLE		N/A	N/A	N/A	N/A
								-	-	-	-	-	14	15	16						
MX150 ASSY RCP 2X8 CPA BK A/14	334728057	A-BLACK	GCP	PLR	CPA	M	R	-	-	-	4	-	-	-	-	SALEABLE		N/A	N/A	N/A	N/A
								9	-	-	-	-	-	-	-						
MX150 ASSY RCP 2X8 BK A/6	334728058	A-BLACK	GCP	PLR		M	R	1	2	3	-	-	6	7	8	SALEABLE		N/A	N/A	N/A	N/A
								-	10	11	-	-	14	-	16						
MX150 ASSY RCP 2X8 BK A/9	334728059	A-BLACK	GCP	PLR		M	R	-	2	3	-	-	6	7	-	SALEABLE		N/A	N/A	N/A	N/A
								-	10	11	-	-	14	-	-						

molex

MX150 RECEPTACLE 2X8 SEALED ASSEMBLY MAT SEAL
BOM AND PIN OUT SHEET

ASSEMBLY DESCRIPTION	ASSEMBLY PART NUMBER	COMPONENT						BLOCKED TERMINALS								STATUS	COMMENT	OPTIONAL ATTACHMENTS SOLD SEPARATELY			
		THE PRESENCE OF AN ABBREVIATION INDICATES THE PRESENCE OF THAT COMPONENT						CAVITY WITH A NUMBER INDICATES BLOCKED TERMINAL POSITION CAVITY WITHOUT A NUMBER INDICATES OPEN TERMINAL POSITION													
		HOUSING KEY/COLOR	GROMMET CAP	PLR	CPA	MAT SEAL	RING SEAL											BACKSHELL WITH RIBS	BACKSHELL WITHOUT RIBS	90^0 ADAPTOR WITH RIBS	90^0 ADAPTOR WITHOUT RIBS
MX150 ASSY RCP 2X8 BK A/11	334728060	A-BLACK	GCP	PLR		M	R	-	2	-	-	-	6	7	-	SALEABLE		N/A	N/A	N/A	N/A
								-	10	-	-	-	14	-	-						
MX150 ASSY RCP 2X8 BK A/9	334728061	A-BLACK	GCP	PLR		M	R	1	2	-	-	-	6	7	-	SALEABLE		N/A	N/A	N/A	N/A
								-	10	-	-	-	14	-	16						
MX150 ASSY RCP 2X8 BK A/12	334728062	A-BLACK	GCP	PLR		M	R	-	-	-	-	-	6	-	8	SALEABLE		N/A	N/A	N/A	N/A
								-	-	-	-	-	-	15	16						
MX150 ASSY RCP 2X8 BK A/12	334728063	A-BLACK	GCP	PLR		M	R	-	-	-	-	-	-	-	8	SALEABLE		N/A	N/A	N/A	N/A
								9	-	-	-	-	-	15	16						
MX150 ASSY RCP 2X8 BK A/8	334728064	A-BLACK	GCP	PLR		M	R	-	-	-	4	-	-	-	8	SALEABLE		N/A	N/A	N/A	N/A
								9	10	-	-	13	14	15	16						
MX150 ASSY RCP 2X8 BK A/10	334728065	A-BLACK	GCP	PLR		M	R	-	-	-	4	-	-	-	8	SALEABLE		N/A	N/A	N/A	N/A
								9	10	-	-	-	-	15	16						
MX150 ASSY RCP 2X8 BK A/9	334728066	A-BLACK	GCP	PLR		M	R	-	-	-	4	-	6	-	8	SALEABLE		N/A	N/A	N/A	N/A
								-	-	11	-	13	-	15	16						
MX150 ASSY RCP 2X8 BK A/12	334728067	A-BLACK	GCP	PLR		M	R	-	-	-	-	-	-	-	8	SALEABLE		N/A	N/A	N/A	N/A
								-	-	11	-	13	-	-	16						
MX150 ASSY RCP 2X8 BK A/10	334728068	A-BLACK	GCP	PLR		M	R	-	-	-	-	5	-	-	8	SALEABLE		N/A	N/A	N/A	N/A
								-	10	11	-	-	14	15	-						
MX150 ASSY RCP 2X8 BK A/11	334728069	A-BLACK	GCP	PLR		M	R	-	-	3	-	-	6	-	-	SALEABLE		N/A	N/A	N/A	N/A
								9	-	11	-	-	14	-	-						
MX150 ASSY RCP 2X8 BK A/13	334728070	A-BLACK	GCP	PLR		M	R	-	-	3	-	-	-	-	-	SALEABLE		N/A	N/A	N/A	N/A
								-	-	-	12	13	-	-	-						
MX150 ASSY RCP 2X8 BK A/14	334728071	A-BLACK	GCP	PLR		M	R	-	-	-	-	-	-	-	-	SALEABLE		N/A	N/A	N/A	N/A
								-	-	-	-	-	-	15	16						
MX150 ASSY RCP 2X8 BK A/15	334728072	A-BLACK	GCP	PLR		M	R	-	-	-	4	-	-	-	-	SALEABLE		N/A	N/A	N/A	N/A
								-	-	-	-	-	-	-	-						
MX150 ASSY RCP 2X8 BK A/14	334728073	A-BLACK	GCP	PLR		M	R	-	-	3	-	-	-	-	-	SALEABLE		N/A	N/A	N/A	N/A
								9	-	-	-	-	-	-	-						
MX150 ASSY RCP 2X8 BK A/15	334728074	A-BLACK	GCP	PLR		M	R	-	-	-	-	-	-	-	-	SALEABLE		N/A	N/A	N/A	N/A
								-	-	11	-	-	-	-	-						
MX150 ASSY RCP 2X8 BK A/14	334728075	A-BLACK	GCP	PLR		M	R	-	-	-	-	-	-	-	-	SALEABLE		N/A	N/A	N/A	N/A
								9	-	-	-	-	14	-	-						
MX150 ASSY RCP 2X8 BK A/9	334728076	A-BLACK	GCP	PLR		M	R	-	-	-	-	-	-	7	-	SALEABLE		N/A	N/A	N/A	N/A
								-	10	11	-	13	14	15	16						
MX150 ASSY RCP 2X8 BK A/8	334728077	A-BLACK	GCP	PLR		M	R	-	-	3	-	-	-	-	-	SALEABLE		N/A	N/A	N/A	N/A
								-	10	11	12	13	14	15	16						
MX150 ASSY RCP 2X8 BK A/10	334728078	A-BLACK	GCP	PLR		M	R	-	-	-	-	-	-	-	-	SALEABLE		N/A	N/A	N/A	N/A
								9	10	11	-	13	-	15	16						
MX150 ASSY RCP 2X8 BK A/8	334728079	A-BLACK	GCP	PLR		M	R	1	-	-	-	-	-	-	8	SALEABLE		N/A	N/A	N/A	N/A
								9	10	11	-	13	-	15	16						
MX150 ASSY RCP 2X8 BK A/2	334728080	A-BLACK	GCP	PLR		M	R	1	2	3	4	5	6	7	8	SALEABLE		N/A	N/A	N/A	N/A
								9	10	11	-	13	-	15	16						
MX150 ASSY RCP 2X8 BK A/6	334728081	A-BLACK	GCP	PLR		M	R	1	-	-	-	-	6	7	-	SALEABLE		N/A	N/A	N/A	N/A
								9	10	11	12	13	-	15	16						
MX150 ASSY RCP 2X8 BK A/7	334728082	A-BLACK	GCP	PLR		M	R	1	-	-	-	-	6	7	-	SALEABLE		N/A	N/A	N/A	N/A
								9	10	11	12	13	-	-	16						
MX150 ASSY RCP 2X8 BK A/7	334728084	A-BLACK	GCP	PLR		M	R	-	2	-	-	5	-	-	-	SALEABLE		N/A	N/A	N/A	N/A
								-	10	11	12	13	14	15	16						
MX150 ASSY RCP 2X8 BK A/4	334728085	A-BLACK	GCP	PLR		M	R	-	2	3	-	5	6	-	-	SALEABLE		N/A	N/A	N/A	N/A
								9	10	11	12	13	14	15	16						
MX150 ASSY RCP 2X8 BK A/10	334728086	A-BLACK	GCP	PLR		M	R	1	-	-	-	-	-	-	-	SALEABLE		N/A	N/A	N/A	N/A
								9	-	11	-	13	-	15	16						
MX150 ASSY RCP 2X8 BK A/9	334728087	A-BLACK	GCP	PLR		M	R	1	-	-	-	-	-	-	-	SALEABLE		N/A	N/A	N/A	N/A
								9	-	11	12	-	14	15	16						

molex

MX150 RECEPTACLE 2X8 SEALED ASSEMBLY MAT SEAL
BOM AND PIN OUT SHEET

ASSEMBLY DESCRIPTION	ASSEMBLY PART NUMBER	COMPONENT						BLOCKED TERMINALS								STATUS	COMMENT	OPTIONAL ATTACHMENTS SOLD SEPARATELY			
		THE PRESENCE OF AN ABBREVIATION INDICATES THE PRESENCE OF THAT COMPONENT						CAVITY WITH A NUMBER INDICATES BLOCKED TERMINAL POSITION CAVITY WITHOUT A NUMBER INDICATES OPEN TERMINAL POSITION													
		HOUSING KEY/COLOR	GROMMET CAP	PLR	CPA	MAT SEAL	RING SEAL											BACKSHELL WITH RIBS	BACKSHELL WITHOUT RIBS	90^0 ADAPTOR WITH RIBS	90^0 ADAPTOR WITHOUT RIBS
MX150 ASSY RCP 2X8 BK A/10	334728090	A-BLACK	GCP	PLR		M	R	-	-	-	-	-	-	-	-	SALEABLE		N/A	N/A	N/A	N/A
								9	10	11	12	-	14	15	-						
MX150 ASSY RCP 2X8 BK A/15	334728091	A-BLACK	GCP	PLR		M	R	-	-	-	-	-	-	-	-	SALEABLE		N/A	N/A	N/A	N/A
								-	-	-	12	-	-	-	-						
MX150 ASSY RCP 2X8 BK A/13	334728092	A-BLACK	GCP	PLR		M	R	-	-	-	-	5	6	-	-	SALEABLE		N/A	N/A	N/A	N/A
								-	-	-	12	-	-	-	-						
MX150 ASSY RCP 2X8 BK A/13	334728093	A-BLACK	GCP	PLR		M	R	-	-	-	-	5	6	7	-	SALEABLE		N/A	N/A	N/A	N/A
								-	-	-	-	-	-	-	-						
MX150 ASSY RCP 2X8 BK A/5	334728094	A-BLACK	GCP	PLR		M	R	1	2	3	4	5	6	7	8	SALEABLE		N/A	N/A	N/A	N/A
								-	10	-	-	13	-	15	-						
MX150 ASSY RCP 2X8 BK A/10	334728095	A-BLACK	GCP	PLR		M	R	-	-	-	-	-	6	-	-	SALEABLE		N/A	N/A	N/A	N/A
								-	10	-	-	13	14	15	16						
MX150 ASSY RCP 2X8 BK A/12	334728096	A-BLACK	GCP	PLR		M	R	-	-	-	-	5	-	-	-	SALEABLE		N/A	N/A	N/A	N/A
								9	-	-	-	-	-	15	16						
MX150 ASSY RCP 2X8 BK A/10	334728097	A-BLACK	GCP	PLR		M	R	-	-	-	-	5	-	-	-	SALEABLE		N/A	N/A	N/A	N/A
								9	-	-	12	13	-	15	16						
MX150 ASSY RCP 2X8 BK A/12	334728098	A-BLACK	GCP	PLR		M	R	-	-	3	-	-	-	-	-	SALEABLE		N/A	N/A	N/A	N/A
								9	-	-	12	13	-	-	-						
MX150 ASSY RCP 2X8 BK A/13	334728099	A-BLACK	GCP	PLR		M	R	-	-	3	-	5	-	-	-	SALEABLE		N/A	N/A	N/A	N/A
								9	-	-	-	-	-	-	-						
MX150 ASSY RCP 2X8 CPA BK A/6	334728100	A-BLACK	GCP	PLR	CPA	M	R	1	2	3	4	5	6	7	8	SALEABLE		N/A	N/A	N/A	N/A
								-	-	-	-	-	14	15	-						
MX150 ASSY RCP 2X8 BK A/6	334728101	A-BLACK	GCP	PLR		M	R	1	2	3	4	5	6	7	8	SALEABLE		N/A	N/A	N/A	N/A
								-	-	-	-	-	14	15	-						
MX150 ASSY RCP 2X8 CPA BK A/14	334728102	A-BLACK	GCP	PLR	CPA	M	R	-	-	-	-	-	-	-	-	SALEABLE		N/A	N/A	N/A	N/A
								-	-	11	-	-	14	-	-						
MX150 ASSY RCP 2X8 CPA BK A/7	334728104	A-BLACK	GCP	PLR	CPA	M	R	-	2	-	4	5	-	-	8	SALEABLE		N/A	N/A	N/A	N/A
								-	-	-	12	13	14	15	16						
MX150 ASSY RCP 2X8 CPA BK A/14	334728105	A-BLACK	GCP	PLR	CPA	M	R	-	-	-	-	-	-	-	8	SALEABLE		N/A	N/A	N/A	N/A
								-	-	-	-	-	-	-	16						
MX150 ASSY RCP 2X8 CPA BK A/8	334728106	A-BLACK	GCP	PLR	CPA	M	R	-	-	-	4	5	-	-	8	SALEABLE		N/A	N/A	N/A	N/A
								-	-	-	12	13	14	15	16						
MX150 ASSY RCP 2X8 BK A/8	334728107	A-BLACK	GCP	PLR		M	R	-	-	3	-	-	6	-	-	SALEABLE		N/A	N/A	N/A	N/A
								-	-	11	12	13	14	15	16						
MX150 ASSY RCP 2X8 BK A/14	334728109	A-BLACK	GCP	PLR		M	R	-	-	3	-	-	-	-	-	SALEABLE		N/A	N/A	N/A	N/A
								-	-	-	-	-	-	-	16						
MX150 ASSY RCP 2X8 BK A/6	334728110	A-BLACK	GCP	PLR		M	R	1	-	-	-	5	6	7	-	SALEABLE		N/A	N/A	N/A	N/A
								9	10	11	12	13	-	-	16						
MX150 ASSY RCP 2X8 BK A/6	334728111	A-BLACK	GCP	PLR		M	R	1	-	-	-	5	6	7	8	SALEABLE		N/A	N/A	N/A	N/A
								-	10	11	12	13	-	-	16						
MX150 ASSY RCP 2X8 BK A/14	334728112	A-BLACK	GCP	PLR		M	R	-	-	3	-	-	-	-	-	SALEABLE		N/A	N/A	N/A	N/A
								-	-	-	-	-	-	15	-						
MX150 ASSY RCP 2X8 CPA BK A/14	334728113	A-BLACK	GCP	PLR	CPA	M	R	-	-	3	-	-	-	-	-	SALEABLE		N/A	N/A	N/A	N/A
								-	-	-	-	-	-	15	-						
MX150 ASSY RCP 2X8 BK A/8	334728114	A-BLACK	GCP	PLR		M	R	1	2	-	4	5	6	-	8	SALEABLE		N/A	N/A	N/A	N/A
								-	10	-	-	-	14	-	-						
MX150 ASSY RCP 2X8 LG B/11	334728115	B-LIGHT GRAY	GCP	PLR		M	R	-	-	-	-	-	6	-	-	SALEABLE		N/A	N/A	N/A	N/A
								-	-	-	-	13	14	15	16						
MX150 ASSY RCP 2X8 LG B/6	334728116	B-LIGHT GRAY	GCP	PLR		M	R	1	2	3	4	-	6	7	-	SALEABLE		N/A	N/A	N/A	N/A
								-	-	-	-	13	14	15	16						
MX150 ASSY RCP 2X8 LG B/3	334728117	B-LIGHT GRAY	GCP	PLR		M	R	-	-	-	4	5	6	7	8	SALEABLE		N/A	N/A	N/A	N/A
								9	10	11	12	13	14	15	16						
MX150 ASSY RCP 2X8 BK A/12	334728118	A-BLACK	GCP	PLR		M	R	-	-	-	-	5	-	-	-	SALEABLE		N/A	N/A	N/A	N/A
								-	10	11	-	-	14	-	-						

molex

MX150 RECEPTACLE 2X8 SEALED ASSEMBLY MAT SEAL
BOM AND PIN OUT SHEET

ASSEMBLY DESCRIPTION	ASSEMBLY PART NUMBER	COMPONENT						BLOCKED TERMINALS								STATUS	COMMENT	OPTIONAL ATTACHMENTS SOLD SEPARATELY			
		THE PRESENCE OF AN ABBREVIATION INDICATES THE PRESENCE OF THAT COMPONENT						CAVITY WITH A NUMBER INDICATES BLOCKED TERMINAL POSITION CAVITY WITHOUT A NUMBER INDICATES OPEN TERMINAL POSITION													
		HOUSING KEY/COLOR	GROMMET CAP	PLR	CPA	MAT SEAL	RING SEAL											BACKSHELL WITH RIBS	BACKSHELL WITHOUT RIBS	90^0 ADAPTOR WITH RIBS	90^0 ADAPTOR WITHOUT RIBS
MX150 ASSY RCP 2X8 BK A/9	334728119	A-BLACK	GCP	PLR		M	R	-	-	3	-	5	-	-	8	SALEABLE		N/A	N/A	N/A	N/A
								-	10	11	-	-	14	15	-						
MX150 ASSY RCP 2X8 BK A/10	334728120	A-BLACK	GCP	PLR		M	R	-	-	3	-	5	-	-	-	SALEABLE		N/A	N/A	N/A	N/A
								-	10	11	-	-	14	15	-						
MX150 ASSY RCP 2X8 BK A/6	334728121	A-BLACK	GCP	PLR		M	R	-	-	3	-	-	6	7	-	SALEABLE		N/A	N/A	N/A	N/A
								9	-	11	12	13	14	15	16						
MX150 ASSY RCP 2X8 BK A/7	334728122	A-BLACK	GCP	PLR		M	R	-	-	3	-	-	6	7	-	SALEABLE		N/A	N/A	N/A	N/A
								-	-	11	12	13	14	15	16						
MX150 ASSY RCP 2X8 CPA BK A/11	334728123	A-BLACK	GCP	PLR	CPA	M	R	-	-	-	4	-	-	7	-	SALEABLE		N/A	N/A	N/A	N/A
								-	-	-	12	13	-	15	-						
MX150 ASSY RCP 2X8 BK A/8	334728124	A-BLACK	GCP	PLR		M	R	-	-	-	4	5	-	-	-	SALEABLE		N/A	N/A	N/A	N/A
								9	-	11	12	13	-	15	16						
MX150 ASSY RCP 2X8 BK A/9	334728125	A-BLACK	GCP	PLR		M	R	-	-	3	-	5	6	-	-	SALEABLE		N/A	N/A	N/A	N/A
								9	-	11	-	-	-	15	16						
MX150 ASSY RCP 2X8 BK A/10	334728126	A-BLACK	GCP	PLR		M	R	-	-	3	4	-	-	-	-	SALEABLE		N/A	N/A	N/A	N/A
								9	-	11	12	13	-	-	-						
MX150 ASSY RCP 2X8 BK A/9	334728127	A-BLACK	GCP	PLR		M	R	-	-	3	4	-	-	7	-	SALEABLE		N/A	N/A	N/A	N/A
								9	-	11	12	13	-	-	-						
MX150 ASSY RCP 2X8 BK A/7	334728128	A-BLACK	GCP	PLR		M	R	-	-	-	4	5	-	7	-	SALEABLE		N/A	N/A	N/A	N/A
								9	-	11	12	13	-	15	16						
MX150 ASSY RCP 2X8 BK A/8	334728129	A-BLACK	GCP	PLR		M	R	-	-	3	-	5	6	7	-	SALEABLE		N/A	N/A	N/A	N/A
								9	-	11	-	-	-	15	16						
MX150 ASSY RCP 2X8 BK A/9	334728130	A-BLACK	GCP	PLR		M	R	-	-	-	4	-	6	7	8	SALEABLE		N/A	N/A	N/A	N/A
								-	10	11	12	-	-	-	-						
MX150 ASSY RCP 2X8 BK A/6	334728131	A-BLACK	GCP	PLR		M	R	1	2	3	4	-	-	7	8	SALEABLE		N/A	N/A	N/A	N/A
								9	-	-	12	-	-	15	16						
MX150 ASSY RCP 2X8 BK A/3	334728132	A-BLACK	GCP	PLR		M	R	1	2	3	4	-	6	7	8	SALEABLE		N/A	N/A	N/A	N/A
								9	10	11	12	-	-	15	16						
MX150 ASSY RCP 2X8 BK A/5	334728133	A-BLACK	GCP	PLR		M	R	1	2	3	-	-	6	7	8	SALEABLE		N/A	N/A	N/A	N/A
								-	10	11	12	-	-	15	16						
MX150 ASSY RCP 2X8 BK A/11	334728134	A-BLACK	GCP	PLR		M	R	-	-	-	4	-	-	7	8	SALEABLE		N/A	N/A	N/A	N/A
								9	-	-	12	-	-	-	-						
MX150 ASSY RCP 2X8 BK A/10	334728135	A-BLACK	GCP	PLR		M	R	-	-	-	-	-	6	7	8	SALEABLE		N/A	N/A	N/A	N/A
								-	10	11	12	-	-	-	-						
MX150 ASSY RCP 2X8 CPA BK A/13	334728136	A-BLACK	GCP	PLR	CPA	M	R	-	-	-	-	5	6	-	-	SALEABLE		N/A	N/A	N/A	N/A
								-	-	-	12	-	-	-	-						
MX150 ASSY RCP 2X8 CPA BK A/15	334728137	A-BLACK	GCP	PLR	CPA	M	R	-	-	-	-	-	-	-	-	SALEABLE		N/A	N/A	N/A	N/A
								-	-	-	12	-	-	-	-						
MX150 ASSY RCP 2X8 BK A/11	334728138	A-BLACK	GCP	PLR		M	R	1	-	-	-	-	-	-	-	SALEABLE		N/A	N/A	N/A	N/A
								9	-	11	-	-	-	15	16						
MX150 ASSY RCP 2X8 CPA BK A/7	334728139	A-BLACK	GCP	PLR	CPA	M	R	-	-	-	-	-	6	7	8	SALEABLE		N/A	N/A	N/A	N/A
								-	-	11	12	13	14	15	16						
MX150 ASSY RCP 2X8 BK A/10	334728140	A-BLACK	GCP	PLR		M	R	-	-	-	-	-	-	7	-	SALEABLE		N/A	N/A	N/A	N/A
								-	-	-	12	13	14	15	16						
MX150 ASSY RCP 2X8 CPA BK A/10	334728141	A-BLACK	GCP	PLR	CPA	M	R	-	-	-	-	-	6	-	-	SALEABLE		N/A	N/A	N/A	N/A
								-	10	-	-	13	14	15	16						
MX150 ASSY RCP 2X8 CPA BK A/8	334728142	A-BLACK	GCP	PLR	CPA	M	R	-	2	-	-	-	6	7	8	SALEABLE		N/A	N/A	N/A	N/A
								-	10	-	-	13	-	15	16						
MX150 ASSY RCP 2X8 BK A/13	334728143	A-BLACK	GCP	PLR		M	R	1	-	-	-	-	-	-	-	SALEABLE		N/A	N/A	N/A	N/A
								-	-	-	-	-	-	15	16						
MX150 ASSY RCP 2X8 BK A/14	334728144	A-BLACK	GCP	PLR		M	R	-	-	-	-	-	-	-	-	SALEABLE		N/A	N/A	N/A	N/A
								-	-	11	-	13	-	-	-						
MX150 ASSY RCP 2X8 BK A/2	334728145	A-BLACK	GCP	PLR		M	R	1	2	3	4	5	-	-	8	SALEABLE		N/A	N/A	N/A	N/A
								9	10	11	12	13	14	15	16						

molex

MX150 RECEPTACLE 2X8 SEALED ASSEMBLY MAT SEAL
BOM AND PIN OUT SHEET

ASSEMBLY DESCRIPTION	ASSEMBLY PART NUMBER	COMPONENT						BLOCKED TERMINALS								STATUS	COMMENT	OPTIONAL ATTACHMENTS SOLD SEPARATELY			
		THE PRESENCE OF AN ABBREVIATION INDICATES THE PRESENCE OF THAT COMPONENT						CAVITY WITH A NUMBER INDICATES BLOCKED TERMINAL POSITION CAVITY WITHOUT A NUMBER INDICATES OPEN TERMINAL POSITION													
		HOUSING KEY/COLOR	GROMMET CAP	PLR	CPA	MAT SEAL	RING SEAL											BACKSHELL WITH RIBS	BACKSHELL WITHOUT RIBS	90^0 ADAPTOR WITH RIBS	90^0 ADAPTOR WITHOUT RIBS
MX150 ASSY RCP 2X8 BK A/13	334728146	A-BLACK	GCP	PLR		M	R	-	2	-	-	-	-	-	-	SALEABLE		N/A	N/A	N/A	N/A
								-	10	-	-	-	14	-	-						
MX150 ASSY RCP 2X8 BK A/11	334728147	A-BLACK	GCP	PLR		M	R	-	2	3	-	-	-	-	-	SALEABLE		N/A	N/A	N/A	N/A
								-	10	11	-	-	14	-	-						
MX150 ASSY RCP 2X8 BK A/8	334728148	A-BLACK	GCP	PLR		M	R	1	2	3	-	-	-	-	8	SALEABLE		N/A	N/A	N/A	N/A
								-	10	11	-	-	14	-	16						
MX150 ASSY RCP 2X8 BK A/9	334728149	A-BLACK	GCP	PLR		M	R	-	-	-	4	5	-	-	8	SALEABLE		N/A	N/A	N/A	N/A
								-	-	-	12	13	14	15	-						
MX150 ASSY RCP 2X8 BK A/5	334728150	A-BLACK	GCP	PLR		M	R	-	2	-	4	5	6	7	-	SALEABLE		N/A	N/A	N/A	N/A
								9	10	11	12	-	14	-	16						
MX150 ASSY RCP 2X8 CPA DG C/15	334728151	C-DARK GRAY	GCP	PLR	CPA	M	R	1	-	-	-	-	-	-	-	SALEABLE		N/A	N/A	N/A	N/A
								-	-	-	-	-	-	-	-						
MX150 ASSY RCP 2X8 SG D/15	334728152	D-STONE GRAY	GCP	PLR		M	R	1	-	-	-	-	-	-	-	SALEABLE		N/A	N/A	N/A	N/A
								-	-	-	-	-	-	-	-						
MX150 ASSY RCP 2X8 DG C/15	334728153	C-DARK GRAY	GCP	PLR		M	R	1	-	-	-	-	-	-	-	SALEABLE		N/A	N/A	N/A	N/A
								-	-	-	-	-	-	-	-						
MX150 ASSY RCP 2X8 CPA SG D/15	334728154	D-STONE GRAY	GCP	PLR	CPA	M	R	1	-	-	-	-	-	-	-	SALEABLE		N/A	N/A	N/A	N/A
								-	-	-	-	-	-	-	-						
MX150 ASSY RCP 2X8 BK A/9	334728155	A-BLACK	GCP	PLR		M	R	1	-	3	-	-	6	7	8	SALEABLE		N/A	N/A	N/A	N/A
								-	-	-	-	-	-	15	16						
MX150 ASSY RCP 2X8 BK A/6	334728156	A-BLACK	GCP	PLR		M	R	-	-	3	4	-	6	-	8	SALEABLE		N/A	N/A	N/A	N/A
								9	10	11	12	-	-	15	16						
MX150 ASSY RCP 2X8 BK A/8	334728157	A-BLACK	GCP	PLR		M	R	-	-	3	4	-	-	-	-	SALEABLE		N/A	N/A	N/A	N/A
								9	10	11	12	-	-	15	16						
MX150 ASSY RCP 2X8 BK A/9	334728158	A-BLACK	GCP	PLR		M	R	-	-	-	4	5	-	7	-	SALEABLE		N/A	N/A	N/A	N/A
								-	10	-	-	13	14	-	16						
MX150 ASSY RCP 2X8 BK A/14	334728159	A-BLACK	GCP	PLR		M	R	-	-	-	-	5	-	-	-	SALEABLE		N/A	N/A	N/A	N/A
								-	-	-	-	-	14	-	-						
MX150 ASSY RCP 2X8 BK A/13	334728160	A-BLACK	GCP	PLR		M	R	-	-	-	4	5	-	-	-	SALEABLE		N/A	N/A	N/A	N/A
								-	-	-	-	-	14	-	-						
MX150 ASSY RCP 2X8 BK A/2	334728161	A-BLACK	GCP	PLR		M	R	1	2	3	4	5	-	7	8	SALEABLE		N/A	N/A	N/A	N/A
								9	10	11	12	13	14	15	-						
MX150 ASSY RCP 2X8 BK A/12	334728162	A-BLACK	GCP	PLR		M	R	-	2	-	-	-	-	7	-	SALEABLE		N/A	N/A	N/A	N/A
								-	10	-	-	-	14	-	-						
MX150 ASSY RCP 2X8 BK A/10	334728163	A-BLACK	GCP	PLR		M	R	1	2	-	-	-	-	7	8	SALEABLE		N/A	N/A	N/A	N/A
								-	10	-	-	-	14	-	-						
MX150 ASSY RCP 2X8 BK A/10	334728164	A-BLACK	GCP	PLR		M	R	-	2	3	-	-	-	7	-	SALEABLE		N/A	N/A	N/A	N/A
								-	10	11	-	-	14	-	-						
MX150 ASSY RCP 2X8 BK A/6	334728165	A-BLACK	GCP	PLR		M	R	1	2	3	4	-	-	7	8	SALEABLE		N/A	N/A	N/A	N/A
								-	10	11	12	-	14	-	-						
MX150 ASSY RCP 2X8 BK A/4	334728166	A-BLACK	GCP	PLR		M	R	-	2	3	4	5	-	7	-	SALEABLE		N/A	N/A	N/A	N/A
								9	10	11	12	13	14	15	-						
MX150 ASSY RCP 2X8 BK A/5	334728167	A-BLACK	GCP	PLR		M	R	-	2	3	-	5	6	7	-	SALEABLE		N/A	N/A	N/A	N/A
								9	-	11	-	13	14	15	16						
MX150 ASSY RCP 2X8 BK A/10	334728168	A-BLACK	GCP	PLR		M	R	-	-	-	4	-	6	-	8	SALEABLE		N/A	N/A	N/A	N/A
								-	-	11	-	13	-	15	-						
MX150 ASSY RCP 2X8 BK A/8	334728169	A-BLACK	GCP	PLR		M	R	1	2	3	-	-	-	7	8	SALEABLE		N/A	N/A	N/A	N/A
								-	10	11	-	-	14	-	-						
MX150 ASSY RCP 2X8 BK A/7	334728170	A-BLACK	GCP	PLR		M	R	-	2	-	-	5	6	7	-	SALEABLE		N/A	N/A	N/A	N/A
								9	10	-	12	13	-	-	16						
MX150 ASSY RCP 2X8 BK A/6	334728171	A-BLACK	GCP	PLR		M	R	-	2	-	4	5	-	-	-	SALEABLE		N/A	N/A	N/A	N/A
								9	-	11	12	13	14	15	16						
MX150 ASSY RCP 2X8 BK A/11	334728172	A-BLACK	GCP	PLR		M	R	-	-	-	4	-	6	-	-	SALEABLE		N/A	N/A	N/A	N/A
								-	-	11	12	13	-	-	-						

molex

MX150 RECEPTACLE 2X8 SEALED ASSEMBLY MAT SEAL
BOM AND PIN OUT SHEET

ASSEMBLY DESCRIPTION	ASSEMBLY PART NUMBER	COMPONENT						BLOCKED TERMINALS								STATUS	COMMENT	OPTIONAL ATTACHMENTS SOLD SEPARATELY			
		THE PRESENCE OF AN ABBREVIATION INDICATES THE PRESENCE OF THAT COMPONENT						CAVITY WITH A NUMBER INDICATES BLOCKED TERMINAL POSITION CAVITY WITHOUT A NUMBER INDICATES OPEN TERMINAL POSITION													
		HOUSING KEY/COLOR	GROMMET CAP	PLR	CPA	MAT SEAL	RING SEAL											BACKSHELL WITH RIBS	BACKSHELL WITHOUT RIBS	90^0 ADAPTOR WITH RIBS	90^0 ADAPTOR WITHOUT RIBS
MX150 ASSY RCP 2X8 BK A/13	334728173	A-BLACK	GCP	PLR		M	R	-	-	-	-	-	-	-	-	SALEABLE		N/A	N/A	N/A	N/A
								-	10	11	-	-	-	-	16						
MX150 ASSY RCP 2X8 BK A/11	334728174	A-BLACK	GCP	PLR		M	R	-	-	-	-	-	6	7	-	SALEABLE		N/A	N/A	N/A	N/A
								-	10	11	-	-	14	-	-						
MX150 ASSY RCP 2X8 BK A/10	334728175	A-BLACK	GCP	PLR		M	R	-	-	-	-	-	6	7	-	SALEABLE		N/A	N/A	N/A	N/A
								9	10	11	-	-	14	-	-						
MX150 ASSY RCP 2X8 CPA BK A/9	334728176	A-BLACK	GCP	PLR	CPA	M	R	-	-	-	4	5	-	-	8	SALEABLE		N/A	N/A	N/A	N/A
								-	-	-	12	13	14	15	-						
MX150 ASSY RCP 2X8 CPA BK A/10	334728177	A-BLACK	GCP	PLR	CPA	M	R	-	2	3	4	-	-	-	-	SALEABLE		N/A	N/A	N/A	N/A
								-	10	11	12	-	-	-	-						
MX150 ASSY RCP 2X8 BK A/14	334728178	A-BLACK	GCP	PLR		M	R	-	-	-	-	-	-	-	-	SALEABLE		N/A	N/A	N/A	N/A
								-	10	-	-	13	-	-	-						
MX150 ASSY RCP 2X8 BK A/13	334728179	A-BLACK	GCP	PLR		M	R	-	-	-	-	-	-	-	8	SALEABLE		N/A	N/A	N/A	N/A
								-	-	-	-	13	14	-	-						
MX150 ASSY RCP 2X8 BK A/10	334728180	A-BLACK	GCP	PLR		M	R	-	-	-	4	-	6	-	-	SALEABLE		N/A	N/A	N/A	N/A
								9	-	11	12	13	-	-	-						
MX150 ASSY RCP 2X8 BK A/11	334728181	A-BLACK	GCP	PLR		M	R	-	-	-	4	-	6	-	-	SALEABLE		N/A	N/A	N/A	N/A
								9	-	11	12	-	-	-	-						
MX150 ASSY RCP 2X8 BK A/9	334728182	A-BLACK	GCP	PLR		M	R	-	-	-	4	-	6	-	-	SALEABLE		N/A	N/A	N/A	N/A
								-	-	11	12	13	14	-	16						
MX150 ASSY RCP 2X8 BK A/8	334728183	A-BLACK	GCP	PLR		M	R	-	-	-	-	5	-	7	8	SALEABLE		N/A	N/A	N/A	N/A
								-	-	11	12	13	14	-	16						
MX150 ASSY RCP 2X8 LG B/7	334728184	B-LIGHT GRAY	GCP	PLR		M	R	1	2	3	4	5	6	7	8	SALEABLE		N/A	N/A	N/A	N/A
								-	-	-	-	-	-	-	16						
MX150 ASSY RCP 2X8 LG B/6	334728185	B-LIGHT GRAY	GCP	PLR		M	R	1	2	3	4	5	6	7	8	SALEABLE		N/A	N/A	N/A	N/A
								-	-	-	-	-	-	15	16						
MX150 ASSY RCP 2X8 BK A/8	334728186	A-BLACK	GCP	PLR		M	R	-	-	3	4	-	6	-	-	SALEABLE		N/A	N/A	N/A	N/A
								9	10	11	-	-	14	-	16						
MX150 ASSY RCP 2X8 BK A/14	334728187	A-BLACK	GCP	PLR		M	R	-	-	-	-	-	-	-	-	SALEABLE		N/A	N/A	N/A	N/A
								9	10	-	-	-	-	-	-						
MX150 ASSY RCP 2X8 BK A/4	334728188	A-BLACK	GCP	PLR		M	R	-	-	3	4	5	6	-	-	SALEABLE		N/A	N/A	N/A	N/A
								9	10	11	12	13	14	15	16						
MX150 ASSY RCP 2X8 LG B/14	334728189	B-LIGHT GRAY	GCP	PLR		M	R	-	-	-	-	-	-	-	-	SALEABLE		N/A	N/A	N/A	N/A
								9	10	-	-	-	-	-	-						
MX150 ASSY RCP 2X8 BK A/10	334728190	A-BLACK	GCP	PLR		M	R	-	2	-	-	-	6	-	-	SALEABLE		N/A	N/A	N/A	N/A
								-	-	-	-	13	14	15	16						
MX150 ASSY RCP 2X8 LG B/3	334728191	B-LIGHT GRAY	GCP	PLR		M	R	1	2	3	4	5	6	7	8	SALEABLE		N/A	N/A	N/A	N/A
								9	10	11	12	13	-	-	-						
MX150 ASSY RCP 2X8 LG B/2	334728192	B-LIGHT GRAY	GCP	PLR		M	R	1	2	3	4	5	6	7	8	SALEABLE		N/A	N/A	N/A	N/A
								9	10	11	-	-	14	15	16						
MX150 ASSY RCP 2X8 BK A/7	334728193	A-BLACK	GCP	PLR		M	R	1	2	3	4	5	6	7	8	SALEABLE		N/A	N/A	N/A	N/A
								-	-	-	-	-	-	-	16						
MX150 ASSY RCP 2X8 CPA BK A/8	334728194	A-BLACK	GCP	PLR	CPA	M	R	-	-	-	-	-	6	7	-	SALEABLE		N/A	N/A	N/A	N/A
								-	10	11	12	13	14	15	-						
MX150 ASSY RCP 2X8 BK A/8	334728195	A-BLACK	GCP	PLR		M	R	-	-	-	-	-	-	7	8	SALEABLE		N/A	N/A	N/A	N/A
								9	10	-	-	13	14	15	16						
MX150 ASSY RCP 2X8 BK A/13	334728196	A-BLACK	GCP	PLR		M	R	-	-	-	4	-	-	7	-	SALEABLE		N/A	N/A	N/A	N/A
								-	-	-	-	-	-	-	16						
MX150 ASSY RCP 2X8 BK A/9	334728197	A-BLACK	GCP	PLR		M	R	1	2	3	4	5	6	-	-	SALEABLE		N/A	N/A	N/A	N/A
								-	-	-	12	-	-	-	-						
MX150 ASSY RCP 2X8 BK A/11	334728198	A-BLACK	GCP	PLR		M	R	-	2	-	4	5	-	-	-	SALEABLE		N/A	N/A	N/A	N/A
								9	-	-	-	-	-	-	16						
MX150 ASSY RCP 2X8 BK A/7	334728199	A-BLACK	GCP	PLR		M	R	-	2	3	4	5	6	-	-	SALEABLE		N/A	N/A	N/A	N/A
								-	-	11	-	-	14	15	16						

molex

MX150 RECEPTACLE 2X8 SEALED ASSEMBLY MAT SEAL
BOM AND PIN OUT SHEET

ASSEMBLY DESCRIPTION	ASSEMBLY PART NUMBER	COMPONENT THE PRESENCE OF AN ABBREVIATION INDICATES THE PRESENCE OF THAT COMPONENT						BLOCKED TERMINALS CAVITY WITH A NUMBER INDICATES BLOCKED TERMINAL POSITION CAVITY WITHOUT A NUMBER INDICATES OPEN TERMINAL POSITION								STATUS	COMMENT	OPTIONAL ATTACHMENTS SOLD SEPARATELY			
		HOUSING KEY/COLOR	GROMMET CAP	PLR	CPA	MAT SEAL	RING SEAL											BACKSHELL WITH RIBS	BACKSHELL WITHOUT RIBS	90^0 ADAPTOR WITH RIBS	90^0 ADAPTOR WITHOUT RIBS
MX150 ASSY RCP 2X8 BK A/9	334728200	A-BLACK	GCP	PLR		M	R	1	-	-	-	-	-	-	8	SALEABLE		N/A	N/A	N/A	N/A
								-	-	11	12	13	-	15	16						
MX150 ASSY RCP 2X8 BK A/6	334728201	A-BLACK	GCP	PLR		M	R	1	-	-	-	-	6	-	8	SALEABLE		N/A	N/A	N/A	N/A
								9	10	11	12	13	-	15	16						
MX150 ASSY RCP 2X8 BK A/7	334728202	A-BLACK	GCP	PLR		M	R	1	-	-	-	-	-	-	8	SALEABLE		N/A	N/A	N/A	N/A
								9	10	11	12	13	-	15	16						
MX150 ASSY RCP 2X8 BK A/12	334728203	A-BLACK	GCP	PLR		M	R	-	-	-	-	5	6	7	-	SALEABLE		N/A	N/A	N/A	N/A
								-	-	-	-	-	-	15	-						
MX150 ASSY RCP 2X8 BK A/10	334728204	A-BLACK	GCP	PLR		M	R	-	-	-	4	-	6	7	8	SALEABLE		N/A	N/A	N/A	N/A
								9	10	-	-	-	-	-	-						
MX150 ASSY RCP 2X8 BK A/12	334728205	A-BLACK	GCP	PLR		M	R	-	-	-	-	-	6	7	8	SALEABLE		N/A	N/A	N/A	N/A
								-	10	-	-	-	-	-	-						
MX150 ASSY RCP 2X8 BK A/6	334728206	A-BLACK	GCP	PLR		M	R	-	-	3	4	5	6	7	8	SALEABLE		N/A	N/A	N/A	N/A
								9	10	11	-	-	-	-	16						
MX150 ASSY RCP 2X8 BK A/9	334728207	A-BLACK	GCP	PLR		M	R	1	-	-	-	-	-	-	8	SALEABLE		N/A	N/A	N/A	N/A
								-	-	11	12	13	14	15	-						
MX150 ASSY RCP 2X8 BK A/8	334728209	A-BLACK	GCP	PLR		M	R	-	-	-	4	-	-	7	8	SALEABLE		N/A	N/A	N/A	N/A
								-	-	11	12	13	14	-	16						
MX150 ASSY RCP 2X8 BK A/9	334728210	A-BLACK	GCP	PLR		M	R	-	-	-	4	-	6	7	-	SALEABLE		N/A	N/A	N/A	N/A
								-	-	11	12	13	-	-	16						
MX150 ASSY RCP 2X8 BK A/6	334728211	A-BLACK	GCP	PLR		M	R	-	-	3	4	5	-	7	-	SALEABLE		N/A	N/A	N/A	N/A
								9	-	11	12	13	-	15	16						
MX150 ASSY RCP 2X8 LG B/4	334728212	B-LIGHT GRAY	GCP	PLR		M	R	1	2	3	4	5	6	7	8	SALEABLE		N/A	N/A	N/A	N/A
								9	10	-	12	13	-	-	-						
MX150 ASSY RCP 2X8 LG B/1	334728213	B-LIGHT GRAY	GCP	PLR		M	R	1	2	3	4	5	6	7	8	SALEABLE		N/A	N/A	N/A	N/A
								9	10	-	12	13	14	15	16						
MX150 ASSY RCP 2X8 BK A/9	334728214	A-BLACK	GCP	PLR		M	R	1	-	-	-	-	6	-	-	SALEABLE		N/A	N/A	N/A	N/A
								9	-	11	12	-	-	15	16						
MX150 ASSY RCP 2X8 BK A/12	334728215	A-BLACK	GCP	PLR		M	R	1	-	-	-	-	6	-	-	SALEABLE		N/A	N/A	N/A	N/A
								9	-	-	-	-	-	15	-						
MX150 ASSY RCP 2X8 BK A/12	334728216	A-BLACK	GCP	PLR		M	R	-	2	3	-	-	-	7	8	SALEABLE		N/A	N/A	N/A	N/A
								-	-	-	-	-	-	-	-						
MX150 ASSY RCP 2X8 BK A/8	334728217	A-BLACK	GCP	PLR		M	R	-	-	-	4	5	6	-	-	SALEABLE		N/A	N/A	N/A	N/A
								-	10	11	12	-	14	15	-						
MX150 ASSY RCP 2X8 BK A/9	334728218	A-BLACK	GCP	PLR		M	R	-	-	-	-	-	6	-	8	SALEABLE		N/A	N/A	N/A	N/A
								9	10	11	12	-	-	-	16						
MX150 ASSY RCP 2X8 CPA BK A/2	334728219	A-BLACK	GCP	PLR	CPA	M	R	-	2	3	4	5	6	-	8	SALEABLE		N/A	N/A	N/A	N/A
								9	10	11	12	13	14	15	16						
MX150 ASSY RCP 2X8 CPA BK A/7	334728220	A-BLACK	GCP	PLR	CPA	M	R	-	-	-	-	5	6	7	-	SALEABLE		N/A	N/A	N/A	N/A
								-	10	11	12	13	14	15	-						
MX150 ASSY RCP 2X8 CPA BK A/8	334728221	A-BLACK	GCP	PLR	CPA	M	R	-	2	3	-	-	-	7	8	SALEABLE		N/A	N/A	N/A	N/A
								-	-	-	12	-	14	15	16						
MX150 ASSY RCP 2X8 CPA BK A/9	334728222	A-BLACK	GCP	PLR	CPA	M	R	1	-	3	4	-	-	7	-	SALEABLE		N/A	N/A	N/A	N/A
								-	-	-	-	-	14	15	16						
MX150 ASSY RCP 2X8 CPA BK A/9	334728223	A-BLACK	GCP	PLR	CPA	M	R	1	-	3	4	-	-	-	8	SALEABLE		N/A	N/A	N/A	N/A
								-	-	-	-	-	14	15	16						
MX150 ASSY RCP 2X8 CPA BK A/10	334728224	A-BLACK	GCP	PLR	CPA	M	R	1	-	-	-	-	-	-	-	SALEABLE		N/A	N/A	N/A	N/A
								-	-	11	12	13	-	15	16						
MX150 ASSY RCP 2X8 CPA BK A/13	334728225	A-BLACK	GCP	PLR	CPA	M	R	1	-	-	-	5	-	-	-	SALEABLE		N/A	N/A	N/A	N/A
								-	-	-	-	-	-	-	16						
MX150 ASSY RCP 2X8 CPA BK A/11	334728226	A-BLACK	GCP	PLR	CPA	M	R	1	2	-	-	-	-	-	-	SALEABLE		N/A	N/A	N/A	N/A
								-	-	11	12	-	-	15	-						
MX150 ASSY RCP 2X8 CPA BK A/5	334728227	A-BLACK	GCP	PLR	CPA	M	R	1	2	3	4	5	6	7	8	SALEABLE		N/A	N/A	N/A	N/A
								-	-	-	-	-	14	15	16						

molex

MX150 RECEPTACLE 2X8 SEALED ASSEMBLY MAT SEAL
BOM AND PIN OUT SHEET

ASSEMBLY DESCRIPTION	ASSEMBLY PART NUMBER	COMPONENT THE PRESENCE OF AN ABBREVIATION INDICATES THE PRESENCE OF THAT COMPONENT						BLOCKED TERMINALS CAVITY WITH A NUMBER INDICATES BLOCKED TERMINAL POSITION CAVITY WITHOUT A NUMBER INDICATES OPEN TERMINAL POSITION								STATUS	COMMENT	OPTIONAL ATTACHMENTS SOLD SEPARATELY			
		HOUSING KEY/COLOR	GROMMET CAP	PLR	CPA	MAT SEAL	RING SEAL											BACKSHELL WITH RIBS	BACKSHELL WITHOUT RIBS	90^0 ADAPTOR WITH RIBS	90^0 ADAPTOR WITHOUT RIBS
MX150 ASSY RCP 2X8 CPA BK A/9	334728228	A-BLACK	GCP	PLR	CPA	M	R	-	-	-	-	-	6	-	8	SALEABLE		N/A	N/A	N/A	N/A
								9	10	11	12	-	-	-	16						
MX150 ASSY RCP 2X8 CPA BK A/10	334728229	A-BLACK	GCP	PLR	CPA	M	R	-	-	-	-	-	6	-	-	SALEABLE		N/A	N/A	N/A	N/A
								9	10	11	12	-	-	-	16						
MX150 ASSY RCP 2X8 CPA BK A/13	334728230	A-BLACK	GCP	PLR	CPA	M	R	-	-	-	-	-	-	7	-	SALEABLE		N/A	N/A	N/A	N/A
								-	-	-	-	13	-	15	-						
MX150 ASSY RCP 2X8 CPA BK A/7	334728231	A-BLACK	GCP	PLR	CPA	M	R	-	2	3	-	-	-	7	8	SALEABLE		N/A	N/A	N/A	N/A
								-	-	11	12	13	-	15	16						
MX150 ASSY RCP 2X8 CPA BK A/13	334728232	A-BLACK	GCP	PLR	CPA	M	R	-	-	-	-	-	-	7	-	SALEABLE		N/A	N/A	N/A	N/A
								-	-	-	-	-	-	15	16						
MX150 ASSY RCP 2X8 CPA BK A/12	334728233	A-BLACK	GCP	PLR	CPA	M	R	-	2	3	-	-	-	-	-	SALEABLE		N/A	N/A	N/A	N/A
								-	-	11	-	-	-	15	-						
MX150 ASSY RCP 2X8 CPA BK A/13	334728234	A-BLACK	GCP	PLR	CPA	M	R	-	-	-	-	-	-	-	-	SALEABLE		N/A	N/A	N/A	N/A
								9	-	-	12	-	-	-	16						
MX150 ASSY RCP 2X8 CPA BK A/6	334728235	A-BLACK	GCP	PLR	CPA	M	R	1	2	3	-	-	-	7	8	SALEABLE		N/A	N/A	N/A	N/A
								-	-	11	-	13	14	15	16						
MX150 ASSY RCP 2X8 CPA BK A/3	334728236	A-BLACK	GCP	PLR	CPA	M	R	1	2	3	4	5	6	7	-	SALEABLE		N/A	N/A	N/A	N/A
								9	10	11	12	13	14	-	-						
MX150 ASSY RCP 2X8 CPA BK A/7	334728237	A-BLACK	GCP	PLR	CPA	M	R	-	-	3	4	5	6	7	-	SALEABLE		N/A	N/A	N/A	N/A
								-	-	11	12	13	14	-	-						
MX150 ASSY RCP 2X8 BK A/13	334728238	A-BLACK	GCP	PLR		M	R	-	-	-	-	-	-	-	-	SALEABLE		N/A	N/A	N/A	N/A
								-	-	11	12	13	-	-	-						
MX150 ASSY RCP 2X8 CPA BK A/11	334728239	A-BLACK	GCP	PLR	CPA	M	R	-	-	-	-	-	6	-	-	SALEABLE		N/A	N/A	N/A	N/A
								9	10	11	12	-	-	-	-						
MX150 ASSY RCP 2X8 BK A/8	334728240	A-BLACK	GCP	PLR		M	R	1	-	-	-	-	-	-	8	SALEABLE		N/A	N/A	N/A	N/A
								-	-	11	12	13	14	15	16						
MX150 ASSY RCP 2X8 CPA LG B/11	334728241	B-LIGHT GRAY	GCP	PLR	CPA	M	R	-	-	-	-	-	6	7	8	SALEABLE		N/A	N/A	N/A	N/A
								-	-	11	-	13	-	-	-						
MX150 ASSY RCP 2X8 BK A/8	334728242	A-BLACK	GCP	PLR		M	R	1	2	-	-	-	-	-	-	SALEABLE		N/A	N/A	N/A	N/A
								-	-	11	12	13	14	15	16						
MX150 ASSY RCP 2X8 BK A/8	334728243	A-BLACK	GCP	PLR		M	R	-	2	3	-	5	6	7	-	SALEABLE		N/A	N/A	N/A	N/A
								-	-	11	-	13	-	15	-						
MX150 ASSY RCP 2X8 CPA BK A/10	334728244	A-BLACK	GCP	PLR	CPA	M	R	-	2	-	-	-	6	-	8	SALEABLE		N/A	N/A	N/A	N/A
								9	10	-	-	-	-	-	16						
MX150 ASSY RCP 2X8 BK A/11	334728245	A-BLACK	GCP	PLR		M	R	-	-	-	-	-	6	-	-	SALEABLE		N/A	N/A	N/A	N/A
								-	-	11	-	13	14	15	-						
MX150 ASSY RCP 2X8 CPA BK A/14	334728246	A-BLACK	GCP	PLR	CPA	M	R	-	-	-	-	-	-	-	-	SALEABLE		N/A	N/A	N/A	N/A
								-	10	-	-	13	-	-	-						
MX150 ASSY RCP 2X8 BK A/7	334728247	A-BLACK	GCP	PLR		M	R	1	2	-	-	-	-	-	8	SALEABLE		N/A	N/A	N/A	N/A
								-	-	11	12	13	14	15	16						
MX150 ASSY RCP 2X8 BK A/12	334728248	A-BLACK	GCP	PLR		M	R	-	-	-	-	-	-	-	-	SALEABLE		N/A	N/A	N/A	N/A
								-	-	-	12	13	14	15	-						
MX150 ASSY RCP 2X8 BK A/10	334728249	A-BLACK	GCP	PLR		M	R	1	-	-	-	-	-	-	8	SALEABLE		N/A	N/A	N/A	N/A
								-	-	-	12	13	14	15	-						
MX150 ASSY RCP 2X8 BK A/8	334728250	A-BLACK	GCP	PLR		M	R	1	-	3	-	-	-	-	8	SALEABLE		N/A	N/A	N/A	N/A
								9	-	-	12	13	14	15	-						
MX150 ASSY RCP 2X8 BK A/4	334728251	A-BLACK	GCP	PLR		M	R	-	2	3	4	5	6	7	-	SALEABLE		N/A	N/A	N/A	N/A
								9	10	-	12	13	14	15	-						
MX150 ASSY RCP 2X8 CPA BK A/12	334728252	A-BLACK	GCP	PLR	CPA	M	R	-	-	-	-	5	6	-	-	SALEABLE		N/A	N/A	N/A	N/A
								9	-	-	-	-	-	-	16						
MX150 ASSY RCP 2X8 BK A/11	334728253	A-BLACK	GCP	PLR		M	R	-	-	3	-	-	-	-	-	SALEABLE		N/A	N/A	N/A	N/A
								9	-	-	-	13	14	15	-						
MX150 ASSY RCP 2X8 BK A/8	334728254	A-BLACK	GCP	PLR		M	R	1	-	3	-	-	-	-	8	SALEABLE		N/A	N/A	N/A	N/A
								9	-	-	-	13	14	15	16						

molex

MX150 RECEPTACLE 2X8 SEALED ASSEMBLY MAT SEAL
BOM AND PIN OUT SHEET

ASSEMBLY DESCRIPTION	ASSEMBLY PART NUMBER	COMPONENT						BLOCKED TERMINALS								STATUS	COMMENT	OPTIONAL ATTACHMENTS SOLD SEPARATELY			
		THE PRESENCE OF AN ABBREVIATION INDICATES THE PRESENCE OF THAT COMPONENT						CAVITY WITH A NUMBER INDICATES BLOCKED TERMINAL POSITION CAVITY WITHOUT A NUMBER INDICATES OPEN TERMINAL POSITION													
		HOUSING KEY/COLOR	GROMMET CAP	PLR	CPA	MAT SEAL	RING SEAL											BACKSHELL WITH RIBS	BACKSHELL WITHOUT RIBS	90^0 ADAPTOR WITH RIBS	90^0 ADAPTOR WITHOUT RIBS
MX150 ASSY RCP 2X8 CPA BK A/12	334728255	A-BLACK	GCP	PLR	CPA	M	R	1	-	-	-	-	-	-	-	SALEABLE		N/A	N/A	N/A	N/A
								9	-	-	-	13	-	-	16						
MX150 ASSY RCP 2X8 CPA BK A/10	334728256	A-BLACK	GCP	PLR	CPA	M	R	-	-	-	4	-	6	7	8	SALEABLE		N/A	N/A	N/A	N/A
								9	10	-	-	-	-	-	-						
MX150 ASSY RCP 2X8 CPA BK A/11	334728257	A-BLACK	GCP	PLR	CPA	M	R	-	-	-	-	-	6	7	8	SALEABLE		N/A	N/A	N/A	N/A
								9	10	-	-	-	-	-	-						
MX150 ASSY RCP 2X8 CPA BK A/9	334728258	A-BLACK	GCP	PLR	CPA	M	R	1	-	3	-	-	6	7	8	SALEABLE		N/A	N/A	N/A	N/A
								-	-	-	-	-	-	15	16						
MX150 ASSY RCP 2X8 CPA BK A/13	334728259	A-BLACK	GCP	PLR	CPA	M	R	-	-	-	-	-	-	-	8	SALEABLE		N/A	N/A	N/A	N/A
								-	-	-	-	13	14	-	-						
MX150 ASSY RCP 2X8 CPA BK A/15	334728260	A-BLACK	GCP	PLR	CPA	M	R	-	-	3	-	-	-	-	-	SALEABLE		N/A	N/A	N/A	N/A
								-	-	-	-	-	-	-	-						
MX150 ASSY RCP 2X8 BK A/10	334728261	A-BLACK	GCP	PLR		M	R	-	-	3	-	-	-	-	-	SALEABLE		N/A	N/A	N/A	N/A
								9	-	-	12	13	14	15	-						
MX150 ASSY RCP 2X8 CPA BK A/14	334728262	A-BLACK	GCP	PLR	CPA	M	R	-	2	-	-	-	-	-	-	SALEABLE		N/A	N/A	N/A	N/A
								-	-	-	-	-	-	15	-						
MX150 ASSY RCP 2X8 CPA BK A/9	334728263	A-BLACK	GCP	PLR	CPA	M	R	-	-	-	4	-	6	7	-	SALEABLE		N/A	N/A	N/A	N/A
								-	-	11	12	13	-	-	16						
MX150 ASSY RCP 2X8 CPA BK A/6	334728264	A-BLACK	GCP	PLR	CPA	M	R	-	-	3	4	5	-	7	-	SALEABLE		N/A	N/A	N/A	N/A
								9	-	11	12	13	-	15	16						
MX150 ASSY RCP 2X8 CPA LG B/2	334728265	B-LIGHT GRAY	GCP	PLR	CPA	M	R	1	2	3	4	5	6	7	8	SALEABLE		N/A	N/A	N/A	N/A
								9	10	11	-	-	14	15	16						
MX150 ASSY RCP 2X8 CPA LG B/14	334728266	B-LIGHT GRAY	GCP	PLR	CPA	M	R	-	-	-	-	-	-	-	-	SALEABLE		N/A	N/A	N/A	N/A
								-	-	-	12	13	-	-	-						
MX150 ASSY RCP 2X8 CPA LG B/4	334728267	B-LIGHT GRAY	GCP	PLR	CPA	M	R	1	2	-	4	5	6	7	-	SALEABLE		N/A	N/A	N/A	N/A
								9	10	11	-	-	14	15	16						
MX150 ASSY RCP 2X8 CPA LG B/10	334728268	B-LIGHT GRAY	GCP	PLR	CPA	M	R	-	2	-	4	5	6	-	-	SALEABLE		N/A	N/A	N/A	N/A
								-	-	-	12	13	-	-	-						
MX150 ASSY RCP 2X8 CPA BK A/12	334728269	A-BLACK	GCP	PLR	CPA	M	R	-	-	-	-	5	6	-	-	SALEABLE		N/A	N/A	N/A	N/A
								-	-	-	-	-	-	15	16						
MX150 ASSY RCP 2X8 CPA BK A/14	334728270	A-BLACK	GCP	PLR	CPA	M	R	-	-	-	-	-	-	-	-	SALEABLE		N/A	N/A	N/A	N/A
								-	-	-	12	13	-	-	-						
MX150 ASSY RCP 2X8 BK A/8	334728271	A-BLACK	GCP	PLR		M	R	-	-	-	-	-	-	-	8	SALEABLE		N/A	N/A	N/A	N/A
								-	10	11	12	13	14	15	16						
MX150 ASSY RCP 2X8 BK A/5	334728272	A-BLACK	GCP	PLR		M	R	-	2	-	4	5	-	-	8	SALEABLE		N/A	N/A	N/A	N/A
								-	10	11	12	13	14	15	16						
MX150 ASSY RCP 2X8 BK A/10	334728273	A-BLACK	GCP	PLR		M	R	-	-	-	-	-	6	-	-	SALEABLE		N/A	N/A	N/A	N/A
								-	-	11	-	13	14	15	16						
MX150 ASSY RCP 2X8 BK A/7	334728274	A-BLACK	GCP	PLR		M	R	-	-	-	-	5	6	7	-	SALEABLE		N/A	N/A	N/A	N/A
								9	10	11	-	13	14	15	-						
MX150 ASSY RCP 2X8 BK A/8	334728275	A-BLACK	GCP	PLR		M	R	-	-	3	-	-	6	-	-	SALEABLE		N/A	N/A	N/A	N/A
								9	-	11	-	13	14	15	16						
MX150 ASSY RCP 2X8 BK A/8	334728276	A-BLACK	GCP	PLR		M	R	-	2	-	4	5	-	-	8	SALEABLE		N/A	N/A	N/A	N/A
								-	-	-	-	13	14	15	16						
MX150 ASSY RCP 2X8 BK A/10	334728277	A-BLACK	GCP	PLR		M	R	-	-	-	-	-	-	-	-	SALEABLE		N/A	N/A	N/A	N/A
								9	-	11	12	13	14	15	-						
MX150 ASSY RCP 2X8 CPA BK A/12	334728278	A-BLACK	GCP	PLR	CPA	M	R	-	-	-	-	-	6	7	8	SALEABLE		N/A	N/A	N/A	N/A
								-	10	-	-	-	-	-	-						
MX150 ASSY RCP 2X8 CPA BK A/11	334728279	A-BLACK	GCP	PLR	CPA	M	R	-	2	3	4	-	-	-	-	SALEABLE		N/A	N/A	N/A	N/A
								-	-	11	12	-	-	-	-						
MX150 ASSY RCP 2X8 CPA BK A/12	334728280	A-BLACK	GCP	PLR	CPA	M	R	1	-	-	-	-	-	-	-	SALEABLE		N/A	N/A	N/A	N/A
								9	10	-	-	13	-	-	-						
MX150 ASSY RCP 2X8 CPA BK A/10	334728281	A-BLACK	GCP	PLR	CPA	M	R	1	-	-	-	-	-	-	-	SALEABLE		N/A	N/A	N/A	N/A
								9	10	11	12	13	-	-	-						

molex

MX150 RECEPTACLE 2X8 SEALED ASSEMBLY MAT SEAL
BOM AND PIN OUT SHEET

ASSEMBLY DESCRIPTION	ASSEMBLY PART NUMBER	COMPONENT						BLOCKED TERMINALS								STATUS	COMMENT	OPTIONAL ATTACHMENTS SOLD SEPARATELY			
		THE PRESENCE OF AN ABBREVIATION INDICATES THE PRESENCE OF THAT COMPONENT						CAVITY WITH A NUMBER INDICATES BLOCKED TERMINAL POSITION CAVITY WITHOUT A NUMBER INDICATES OPEN TERMINAL POSITION													
		HOUSING KEY/COLOR	GROMMET CAP	PLR	CPA	MAT SEAL	RING SEAL											BACKSHELL WITH RIBS	BACKSHELL WITHOUT RIBS	90^0 ADAPTOR WITH RIBS	90^0 ADAPTOR WITHOUT RIBS
MX150 ASSY RCP 2X8 CPA BK A/8	334728282	A-BLACK	GCP	PLR	CPA	M	R	-	-	-	-	5	6	-	-	SALEABLE		N/A	N/A	N/A	N/A
								-	-	11	12	13	14	15	16						
MX150 ASSY RCP 2X8 CPA BK A/12	334728283	A-BLACK	GCP	PLR	CPA	M	R	-	-	-	-	-	-	7	-	SALEABLE		N/A	N/A	N/A	N/A
								-	-	-	-	-	14	15	16						
MX150 ASSY RCP 2X8 CPA BK A/13	334728284	A-BLACK	GCP	PLR	CPA	M	R	-	-	-	-	-	-	-	8	SALEABLE		N/A	N/A	N/A	N/A
								-	-	-	-	-	-	15	16						
MX150 ASSY RCP 2X8 CPA BK A/12	334728285	A-BLACK	GCP	PLR	CPA	M	R	1	-	-	-	-	6	-	-	SALEABLE		N/A	N/A	N/A	N/A
								9	-	-	-	-	-	15	-						
MX150 ASSY RCP 2X8 BK A/6	334728286	A-BLACK	GCP	PLR		M	R	1	2	3	4	5	6	7	8	SALEABLE		N/A	N/A	N/A	N/A
								-	-	-	-	13	-	15	-						
MX150 ASSY RCP 2X8 CPA BK A/12	334728287	A-BLACK	GCP	PLR	CPA	M	R	-	-	-	-	-	-	-	-	SALEABLE		N/A	N/A	N/A	N/A
								-	-	-	12	13	14	15	-						
MX150 ASSY RCP 2X8 CPA BK A/13	334728288	A-BLACK	GCP	PLR	CPA	M	R	-	-	-	-	-	-	-	-	SALEABLE		N/A	N/A	N/A	N/A
								-	10	-	-	13	-	-	16						
MX150 ASSY RCP 2X8 LG B/12	334728289	B-LIGHT GRAY	GCP	PLR		M	R	-	-	-	-	-	-	-	-	SALEABLE		N/A	N/A	N/A	N/A
								-	-	11	-	-	14	15	16						
MX150 ASSY RCP 2X8 CPA BK A/14	334728290	A-BLACK	GCP	PLR	CPA	M	R	-	-	-	-	-	-	-	-	SALEABLE		N/A	N/A	N/A	N/A
								9	10	-	-	-	-	-	-						
MX150 ASSY RCP 2X8 CPA BK A/4	334728291	A-BLACK	GCP	PLR	CPA	M	R	-	-	3	4	5	6	-	-	SALEABLE		N/A	N/A	N/A	N/A
								9	10	11	12	13	14	15	16						
MX150 ASSY RCP 2X8 BK A/12	334728292	A-BLACK	GCP	PLR		M	R	-	-	-	4	-	-	7	-	SALEABLE		N/A	N/A	N/A	N/A
								-	-	-	-	-	14	-	16						

molex

MX150 RECEPTACLE 2X8 SEALED ASSEMBLY MAT SEAL
BOM AND PIN OUT SHEET

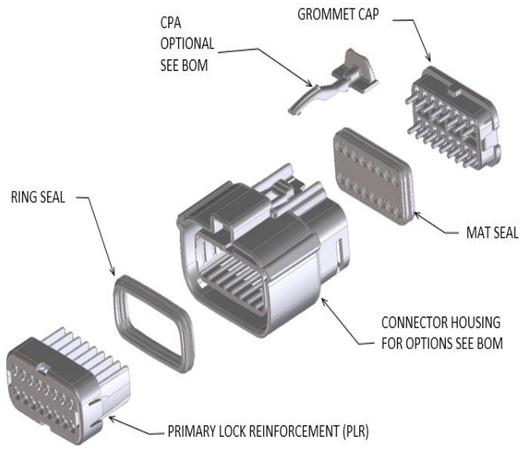

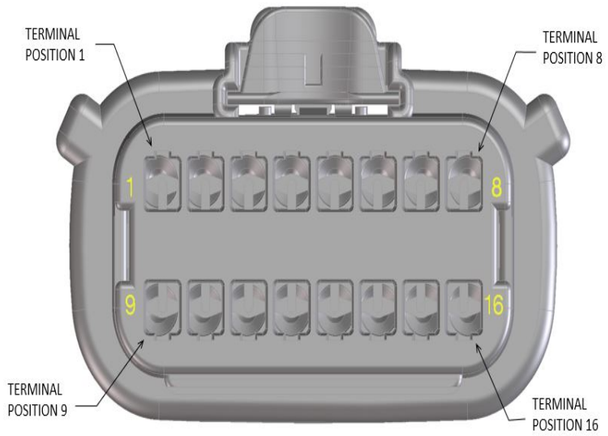

ABBREVIATION	DESCRIPTION	COLOR	MATERIAL
A-BLACK	HOUSING, KEYING OPTION A	BLACK	SPS/NYLON GF20
B-LIGHT GRAY	HOUSING, KEYING OPTION B	LIGHT GRAY	SPS/NYLON GF20
C-BROWN	HOUSING, KEYING OPTION C	BROWN	SPS/NYLON GF20
D-GREEN	HOUSING, KEYING OPTION D	GREEN	SPS/NYLON GF20
C-DARK GRAY	HOUSING, KEYING OPTION C	DARK GRAY	SPS/NYLON GF20
D-STONE GRAY	HOUSING, KEYING OPTION D	STONE GRAY	SPS/NYLON GF20
A-YELLOW	HOUSING, KEYING OPTION A	YELLOW	SPS/NYLON GF20
A-BLACK-CLIP	HOUSING, KEYING OPTION A WITH CLIPSLOT	BLACK	SPS/NYLON GF20
B-LIGHT GRAY-CLIP	HOUSING, KEYING OPTION B WITH CLIPSLOT	LIGHT GRAY	SPS/NYLON GF20
C-DARK GRAY-CLIP	HOUSING, KEYING OPTION C WITH CLIPSLOT	DARK GRAY	SPS/NYLON GF20
D-STONE GRAY-CLIP	HOUSING, KEYING OPTION D WITH CLIPSLOT	STONE GRAY	SPS/NYLON GF20
GCO	GROMMET CAP (OPEN)	BLACK	SPS/NYLON GF20
GCP	GROMMET CAP (PLUGGED)	BLACK	SPS/NYLON GF20
PLR	PLR	NATURAL	SPS/NYLON GF20
CPA	CPA	RED	PBT GF30
M	MAT SEAL	LIGHT BLUE	INHERENTLY LUBRICATED SILICONE
R	RING SEAL	GREEN	INHERENTLY LUBRICATED SILICONE

FOR ADDITIONAL INFORMATION SEE SD-33472-0001

ASSEMBLY DESCRIPTION	ASSEMBLY PART NUMBER	COMPONENT						BLOCKED TERMINALS								STATUS	COMMENT	OPTIONAL ATTACHMENTS SOLD SEPARATELY			
		THE PRESENCE OF AN ABBREVIATION INDICATES THE PRESENCE OF THAT COMPONENT						CAVITY WITH A NUMBER INDICATES BLOCKED TERMINAL POSITION CAVITY WITHOUT A NUMBER INDICATES OPEN TERMINAL POSITION													
		HOUSING KEY/COLOR	GROMMET CAP	PLR	CPA	MAT SEAL	RING SEAL											BACKSHELL WITH RIBS	BACKSHELL WITHOUT RIBS	90^0 ADAPTOR WITH RIBS	90^0 ADAPTOR WITHOUT RIBS
MX150 ASSY RCP 2X8 BK A/16	334721601	A-BLACK	GCO	PLR		M	R	-	-	-	-	-	-	-	-	SALEABLE		N/A	N/A	N/A	N/A
								-	-	-	-	-	-	-	-						
MX150 ASSY RCP 2X8 LG B/16	334721602	B-LIGHT GRAY	GCO	PLR		M	R	-	-	-	-	-	-	-	-	SALEABLE		N/A	N/A	N/A	N/A
								-	-	-	-	-	-	-	-						
MX150 ASSY RCP 2X8 BR C/16	334721603	C-BROWN	GCO	PLR		M	R	-	-	-	-	-	-	-	-	NOT RECOMMENDED	SEE PN 334721767	N/A	N/A	N/A	N/A
								-	-	-	-	-	-	-	-						
MX150 ASSY RCP 2X8 GR D/16	334721604	D-GREEN	GCO	PLR		M	R	-	-	-	-	-	-	-	-	NOT RECOMMENDED	SEE PN 334721768	N/A	N/A	N/A	N/A
								-	-	-	-	-	-	-	-						
MX150 ASSY RCP 2X8 CPA BK A/16	334721606	A-BLACK	GCO	PLR	CPA	M	R	-	-	-	-	-	-	-	-	SALEABLE		N/A	N/A	N/A	N/A
								-	-	-	-	-	-	-	-						
MX150 ASSY RCP 2X8 CPA LG B/16	334721607	B-LIGHT GRAY	GCO	PLR	CPA	M	R	-	-	-	-	-	-	-	-	SALEABLE		N/A	N/A	N/A	N/A
								-	-	-	-	-	-	-	-						
MX150 ASSY RCP 2X8 CPA BR C/16	334721608	C-BROWN	GCO	PLR	CPA	M	R	-	-	-	-	-	-	-	-	NOT RECOMMENDED	SEE PN 334721769	N/A	N/A	N/A	N/A
								-	-	-	-	-	-	-	-						
MX150 ASSY RCP 2X8 CPA GR D/16	334721609	D-GREEN	GCO	PLR	CPA	M	R	-	-	-	-	-	-	-	-	NOT RECOMMENDED	SEE PN 334721770	N/A	N/A	N/A	N/A
								-	-	-	-	-	-	-	-						
MX150 ASSY RCP 2X8 BK A/15	334721611	A-BLACK	GCP	PLR		M	R	-	-	-	-	-	-	-	8	SALEABLE		N/A	N/A	N/A	N/A
								-	-	-	-	-	-	-	-						
MX150 ASSY RCP 2X8 LG B/15	334721612	B-LIGHT GRAY	GCP	PLR		M	R	-	-	-	-	-	-	-	8	SALEABLE		N/A	N/A	N/A	N/A
								-	-	-	-	-	-	-	-						
MX150 ASSY RCP 2X8 BR C/15	334721613	C-BROWN	GCP	PLR		M	R	-	-	-	-	-	-	-	8	NOT RECOMMENDED		N/A	N/A	N/A	N/A
								-	-	-	-	-	-	-	-						
MX150 ASSY RCP 2X8 GR D/15	334721614	D-GREEN	GCP	PLR		M	R	-	-	-	-	-	-	-	8	NOT RECOMMENDED		N/A	N/A	N/A	N/A
								-	-	-	-	-	-	-	-						
MX150 ASSY RCP 2X8 CPA BK A/15	334721616	A-BLACK	GCP	PLR	CPA	M	R	-	-	-	-	-	-	-	8	SALEABLE		N/A	N/A	N/A	N/A
								-	-	-	-	-	-	-	-						
MX150 ASSY RCP 2X8 CPA LG B/15	334721617	B-LIGHT GRAY	GCP	PLR	CPA	M	R	-	-	-	-	-	-	-	8	SALEABLE		N/A	N/A	N/A	N/A
								-	-	-	-	-	-	-	-						
MX150 ASSY RCP 2X8 CPA BR C/15	334721618	C-BROWN	GCP	PLR	CPA	M	R	-	-	-	-	-	-	-	8	NOT RECOMMENDED		N/A	N/A	N/A	N/A
								-	-	-	-	-	-	-	-						
MX150 ASSY RCP 2X8 CPA GR D/15	334721619	D-GREEN	GCP	PLR	CPA	M	R	-	-	-	-	-	-	-	8	NOT RECOMMENDED		N/A	N/A	N/A	N/A
								-	-	-	-	-	-	-	-						

molex

MX150 RECEPTACLE 2X8 SEALED ASSEMBLY MAT SEAL
BOM AND PIN OUT SHEET

ASSEMBLY DESCRIPTION	ASSEMBLY PART NUMBER	COMPONENT THE PRESENCE OF AN ABBREVIATION INDICATES THE PRESENCE OF THAT COMPONENT						BLOCKED TERMINALS CAVITY WITH A NUMBER INDICATES BLOCKED TERMINAL POSITION CAVITY WITHOUT A NUMBER INDICATES OPEN TERMINAL POSITION								STATUS	COMMENT	OPTIONAL ATTACHMENTS SOLD SEPARATELY			
		HOUSING KEY/COLOR	GROMMET CAP	PLR	CPA	MAT SEAL	RING SEAL											BACKSHELL WITH RIBS	BACKSHELL WITHOUT RIBS	90^0 ADAPTOR WITH RIBS	90^0 ADAPTOR WITHOUT RIBS
MX150 ASSY RCP 2X8 BK A/0	334721621	A-BLACK	GCP	PLR		M	R	1	2	3	4	5	6	7	8	SALEABLE		N/A	N/A	N/A	N/A
								9	10	11	12	13	14	15	16						
MX150 ASSY RCP 2X8 LG B/0	334721622	B-LIGHT GRAY	GCP	PLR		M	R	1	2	3	4	5	6	7	8	SALEABLE		N/A	N/A	N/A	N/A
								9	10	11	12	13	14	15	16						
MX150 ASSY RCP 2X8 BR C/0	334721623	C-BROWN	GCP	PLR		M	R	1	2	3	4	5	6	7	8	NOT RECOMMENDED		N/A	N/A	N/A	N/A
								9	10	11	12	13	14	15	16						
MX150 ASSY RCP 2X8 GR D/0	334721624	D-GREEN	GCP	PLR		M	R	1	2	3	4	5	6	7	8	NOT RECOMMENDED		N/A	N/A	N/A	N/A
								9	10	11	12	13	14	15	16						
MX150 ASSY RCP 2X8 CPA BK A/0	334721626	A-BLACK	GCP	PLR	CPA	M	R	1	2	3	4	5	6	7	8	SALEABLE		N/A	N/A	N/A	N/A
								9	10	11	12	13	14	15	16						
MX150 ASSY RCP 2X8 CPA LG B/0	334721627	B-LIGHT GRAY	GCP	PLR	CPA	M	R	1	2	3	4	5	6	7	8	SALEABLE		N/A	N/A	N/A	N/A
								9	10	11	12	13	14	15	16						
MX150 ASSY RCP 2X8 CPA BR C/0	334721628	C-BROWN	GCP	PLR	CPA	M	R	1	2	3	4	5	6	7	8	NOT RECOMMENDED		N/A	N/A	N/A	N/A
								9	10	11	12	13	14	15	16						
MX150 ASSY RCP 2X8 CPA GR D/0	334721629	D-GREEN	GCP	PLR	CPA	M	R	1	2	3	4	5	6	7	8	NOT RECOMMENDED		N/A	N/A	N/A	N/A
								9	10	11	12	13	14	15	16						
MX150 ASSY RCP 2X8 BK A/14	334721631	A-BLACK	GCP	PLR		M	R	-	-	-	-	-	-	-	8	SALEABLE		N/A	N/A	N/A	N/A
								9	-	-	-	-	-	-	-						
MX150 ASSY RCP 2X8 LG B/14	334721632	B-LIGHT GRAY	GCP	PLR		M	R	-	-	-	-	-	-	-	8	SALEABLE		N/A	N/A	N/A	N/A
								9	-	-	-	-	-	-	-						
MX150 ASSY RCP 2X8 BR C/14	334721633	C-BROWN	GCP	PLR		M	R	-	-	-	-	-	-	-	8	NOT RECOMMENDED		N/A	N/A	N/A	N/A
								9	-	-	-	-	-	-	-						
MX150 ASSY RCP 2X8 GR D/14	334721634	D-GREEN	GCP	PLR		M	R	-	-	-	-	-	-	-	8	NOT RECOMMENDED		N/A	N/A	N/A	N/A
								9	-	-	-	-	-	-	-						
MX150 ASSY RCP 2X8 CPA BK A/14	334721636	A-BLACK	GCP	PLR	CPA	M	R	-	-	-	-	-	-	-	8	SALEABLE		N/A	N/A	N/A	N/A
								9	-	-	-	-	-	-	-						
MX150 ASSY RCP 2X8 CPA LG B/14	334721637	B-LIGHT GRAY	GCP	PLR	CPA	M	R	-	-	-	-	-	-	-	8	SALEABLE		N/A	N/A	N/A	N/A
								9	-	-	-	-	-	-	-						
MX150 ASSY RCP 2X8 CPA BR C/14	334721638	C-BROWN	GCP	PLR	CPA	M	R	-	-	-	-	-	-	-	8	NOT RECOMMENDED		N/A	N/A	N/A	N/A
								9	-	-	-	-	-	-	-						
MX150 ASSY RCP 2X8 CPA GR D/14	334721639	D-GREEN	GCP	PLR	CPA	M	R	-	-	-	-	-	-	-	8	NOT RECOMMENDED		N/A	N/A	N/A	N/A
								9	-	-	-	-	-	-	-						
MX150 ASSY RCP 2X8 BK A/13	334721641	A-BLACK	GCP	PLR		M	R	1	-	-	-	-	-	-	8	SALEABLE		N/A	N/A	N/A	N/A
								9	-	-	-	-	-	-	-						
MX150 ASSY RCP 2X8 LG B/13	334721642	B-LIGHT GRAY	GCP	PLR		M	R	1	-	-	-	-	-	-	8	SALEABLE		N/A	N/A	N/A	N/A
								9	-	-	-	-	-	-	-						
MX150 ASSY RCP 2X8 BR C/13	334721643	C-BROWN	GCP	PLR		M	R	1	-	-	-	-	-	-	8	NOT RECOMMENDED		N/A	N/A	N/A	N/A
								9	-	-	-	-	-	-	-						
MX150 ASSY RCP 2X8 GR D/13	334721644	D-GREEN	GCP	PLR		M	R	1	-	-	-	-	-	-	8	NOT RECOMMENDED		N/A	N/A	N/A	N/A
								9	-	-	-	-	-	-	-						
MX150 ASSY RCP 2X8 CPA BK A/13	334721646	A-BLACK	GCP	PLR	CPA	M	R	1	-	-	-	-	-	-	8	SALEABLE		N/A	N/A	N/A	N/A
								9	-	-	-	-	-	-	-						
MX150 ASSY RCP 2X8 CPA LG B/13	334721647	B-LIGHT GRAY	GCP	PLR	CPA	M	R	1	-	-	-	-	-	-	8	SALEABLE		N/A	N/A	N/A	N/A
								9	-	-	-	-	-	-	-						
MX150 ASSY RCP 2X8 CPA BR C/13	334721648	C-BROWN	GCP	PLR	CPA	M	R	1	-	-	-	-	-	-	8	NOT RECOMMENDED		N/A	N/A	N/A	N/A
								9	-	-	-	-	-	-	-						
MX150 ASSY RCP 2X8 CPA GR D/13	334721649	D-GREEN	GCP	PLR	CPA	M	R	1	-	-	-	-	-	-	8	NOT RECOMMENDED		N/A	N/A	N/A	N/A
								9	-	-	-	-	-	-	-						
MX150 ASSY RCP 2X8 BK A/15	334721651	A-BLACK	GCP	PLR		M	R	-	-	-	-	-	-	-	-	SALEABLE		N/A	N/A	N/A	N/A
								-	-	-	-	-	-	15	-						
MX150 ASSY RCP 2X8 CPA BK A/15	334721652	A-BLACK	GCP	PLR	CPA	M	R	-	-	-	-	-	-	-	-	SALEABLE		N/A	N/A	N/A	N/A
								-	-	-	-	-	-	15	-						
MX150 ASSY RCP 2X8 BK A/12	334721653	A-BLACK	GCP	PLR		M	R	1	-	-	-	-	-	-	8	SALEABLE		N/A	N/A	N/A	N/A
								9	-	-	-	-	-	-	16						

molex

MX150 RECEPTACLE 2X8 SEALED ASSEMBLY MAT SEAL
BOM AND PIN OUT SHEET

ASSEMBLY DESCRIPTION	ASSEMBLY PART NUMBER	COMPONENT						BLOCKED TERMINALS								STATUS	COMMENT	OPTIONAL ATTACHMENTS SOLD SEPARATELY			
		THE PRESENCE OF AN ABBREVIATION INDICATES THE PRESENCE OF THAT COMPONENT						CAVITY WITH A NUMBER INDICATES BLOCKED TERMINAL POSITION CAVITY WITHOUT A NUMBER INDICATES OPEN TERMINAL POSITION													
		HOUSING KEY/COLOR	GROMMET CAP	PLR	CPA	MAT SEAL	RING SEAL											BACKSHELL WITH RIBS	BACKSHELL WITHOUT RIBS	90^0 ADAPTOR WITH RIBS	90^0 ADAPTOR WITHOUT RIBS
MX150 ASSY RCP 2X8 LG B/12	334721654	B-LIGHT GRAY	GCP	PLR		M	R	1	-	-	-	-	-	-	8	SALEABLE		N/A	N/A	N/A	N/A
								9	-	-	-	-	-	-	16						
MX150 ASSY RCP 2X8 BR C/12	334721655	C-BROWN	GCP	PLR		M	R	1	-	-	-	-	-	-	8	NOT RECOMMENDED		N/A	N/A	N/A	N/A
								9	-	-	-	-	-	-	16						
MX150 ASSY RCP 2X8 GR D/12	334721656	D-GREEN	GCP	PLR		M	R	1	-	-	-	-	-	-	8	NOT RECOMMENDED		N/A	N/A	N/A	N/A
								9	-	-	-	-	-	-	16						
MX150 ASSY RCP 2X8 CPA BK A/12	334721658	A-BLACK	GCP	PLR	CPA	M	R	1	-	-	-	-	-	-	8	SALEABLE		N/A	N/A	N/A	N/A
								9	-	-	-	-	-	-	16						
MX150 ASSY RCP 2X8 CPA LG B/12	334721659	B-LIGHT GRAY	GCP	PLR	CPA	M	R	1	-	-	-	-	-	-	8	SALEABLE		N/A	N/A	N/A	N/A
								9	-	-	-	-	-	-	16						
MX150 ASSY RCP 2X8 CPA BR C/12	334721660	C-BROWN	GCP	PLR	CPA	M	R	1	-	-	-	-	-	-	8	NOT RECOMMENDED		N/A	N/A	N/A	N/A
								9	-	-	-	-	-	-	16						
MX150 ASSY RCP 2X8 CPA GR D/12	334721661	D-GREEN	GCP	PLR	CPA	M	R	1	-	-	-	-	-	-	8	NOT RECOMMENDED		N/A	N/A	N/A	N/A
								9	-	-	-	-	-	-	16						
MX150 ASSY RCP 2X8 BK A/7	334721663	A-BLACK	GCP	PLR		M	R	1	-	-	4	-	6	7	8	SALEABLE		N/A	N/A	N/A	N/A
								9	-	-	12	13	14	-	-						
MX150 ASSY RCP 2X8 BK A/4	334721664	A-BLACK	GCP	PLR		M	R	-	-	3	4	5	-	7	-	SALEABLE		N/A	N/A	N/A	N/A
								9	10	11	12	13	14	15	16						
MX150 ASSY RCP 2X8 BK A/10	334721665	A-BLACK	GCP	PLR		M	R	-	-	-	-	-	-	7	8	SALEABLE		N/A	N/A	N/A	N/A
								9	-	-	12	13	14	-	-						
MX150 ASSY RCP 2X8 BK A/6	334721666	A-BLACK	GCP	PLR		M	R	-	-	3	4	5	-	-	-	SALEABLE		N/A	N/A	N/A	N/A
								-	10	11	12	13	14	15	16						
MX150 ASSY RCP 2X8 BK A/5	334721667	A-BLACK	GCP	PLR		M	R	-	-	3	4	5	-	-	-	SALEABLE		N/A	N/A	N/A	N/A
								9	10	11	12	13	14	15	16						
MX150 ASSY RCP 2X8 BK A/14	334721668	A-BLACK	GCP	PLR		M	R	1	-	-	-	5	-	-	-	SALEABLE		N/A	N/A	N/A	N/A
								-	-	-	-	-	-	-	-						
MX150 ASSY RCP 2X8 LG B/10	334721669	B-LIGHT GRAY	GCP	PLR		M	R	-	-	-	-	-	-	-	8	SALEABLE		N/A	N/A	N/A	N/A
								-	-	-	12	13	14	15	16						
MX150 ASSY RCP 2X8 LG B/11	334721670	B-LIGHT GRAY	GCP	PLR		M	R	-	-	-	-	-	-	-	8	SALEABLE		N/A	N/A	N/A	N/A
								-	-	-	-	13	14	15	16						
MX150 ASSY RCP 2X8 LG B/14	334721671	B-LIGHT GRAY	GCP	PLR		M	R	-	-	-	-	-	-	-	-	SALEABLE		N/A	N/A	N/A	N/A
								-	10	11	-	-	-	-	-						
MX150 ASSY RCP 2X8 LG B/13	334721672	B-LIGHT GRAY	GCP	PLR		M	R	-	-	-	-	-	-	-	-	SALEABLE		N/A	N/A	N/A	N/A
								-	10	11	12	-	-	-	-						
MX150 ASSY RCP 2X8 CPA BK A/10	334721673	A-BLACK	GCP	PLR	CPA	M	R	-	-	-	-	-	-	-	-	SALEABLE		N/A	N/A	N/A	N/A
								-	10	11	-	13	14	15	16						
MX150 ASSY RCP 2X8 LG B/15	334721674	B-LIGHT GRAY	GCP	PLR		M	R	-	-	-	-	-	-	-	-	SALEABLE		N/A	N/A	N/A	N/A
								-	-	-	12	-	-	-	-						
MX150 ASSY RCP 2X8 CPA BK A/12	334721675	A-BLACK	GCP	PLR	CPA	M	R	-	-	-	-	-	-	-	-	SALEABLE		N/A	N/A	N/A	N/A
								-	10	11	-	-	-	15	16						
MX150 ASSY RCP 2X8 CPA BK A/9	334721676	A-BLACK	GCP	PLR	CPA	M	R	-	-	-	-	-	-	-	8	SALEABLE		N/A	N/A	N/A	N/A
								9	10	11	12	-	-	15	16						
MX150 ASSY RCP 2X8 LG B/10	334721677	B-LIGHT GRAY	GCP	PLR		M	R	-	-	-	4	-	6	7	8	SALEABLE		N/A	N/A	N/A	N/A
								-	-	-	12	-	14	-	-						
MX150 ASSY RCP 2X8 BK A/15	334721678	A-BLACK	GCP	PLR		M	R	-	-	-	-	5	-	-	-	SALEABLE		N/A	N/A	N/A	N/A
								-	-	-	-	-	-	-	-						
MX150 ASSY RCP 2X8 BK A/14	334721679	A-BLACK	GCP	PLR		M	R	-	-	-	-	5	-	-	-	SALEABLE		N/A	N/A	N/A	N/A
								-	-	-	-	-	-	-	16						
MX150 ASSY RCP 2X8 CPA BK A/14	334721680	A-BLACK	GCP	PLR	CPA	M	R	-	-	-	-	-	-	-	-	SALEABLE		N/A	N/A	N/A	N/A
								-	-	-	-	-	-	15	16						
MX150 ASSY RCP 2X8 BK A/11	334721681	A-BLACK	GCP	PLR		M	R	-	2	-	-	5	-	7	-	SALEABLE		N/A	N/A	N/A	N/A
								-	10	-	-	-	14	-	-						
MX150 ASSY RCP 2X8 LG B/15	334721682	B-LIGHT GRAY	GCP	PLR		M	R	-	-	-	4	-	-	-	-	SALEABLE		N/A	N/A	N/A	N/A
								-	-	-	-	-	-	-	-						

molex

MX150 RECEPTACLE 2X8 SEALED ASSEMBLY MAT SEAL
BOM AND PIN OUT SHEET

ASSEMBLY DESCRIPTION	ASSEMBLY PART NUMBER	COMPONENT: THE PRESENCE OF AN ABBREVIATION INDICATES THE PRESENCE OF THAT COMPONENT						BLOCKED TERMINALS: CAVITY WITH A NUMBER INDICATES BLOCKED TERMINAL POSITION; CAVITY WITHOUT A NUMBER INDICATES OPEN TERMINAL POSITION								STATUS	COMMENT	OPTIONAL ATTACHMENTS SOLD SEPARATELY			
		HOUSING KEY/COLOR	GROMMET CAP	PLR	CPA	MAT SEAL	RING SEAL											BACKSHELL WITH RIBS	BACKSHELL WITHOUT RIBS	90^0 ADAPTOR WITH RIBS	90^0 ADAPTOR WITHOUT RIBS
MX150 ASSY RCP 2X8 BK A/15	334721683	A-BLACK	GCP	PLR		M	R	-	-	-	-	-	-	-	-	SALEABLE		N/A	N/A	N/A	N/A
								-	-	-	-	-	-	-	16						
MX150 ASSY RCP 2X8 BK A/14	334721684	A-BLACK	GCP	PLR		M	R	-	-	-	4	-	-	-	-	SALEABLE		N/A	N/A	N/A	N/A
								-	-	-	12	-	-	-	-						
MX150 ASSY RCP 2X8 LG B/15	334721685	B-LIGHT GRAY	GCP	PLR		M	R	-	-	-	-	-	-	-	-	SALEABLE		N/A	N/A	N/A	N/A
								-	-	-	-	-	-	-	16						
MX150 ASSY RCP 2X8 LG B/13	334721686	B-LIGHT GRAY	GCP	PLR		M	R	-	-	-	4	-	-	-	-	SALEABLE		N/A	N/A	N/A	N/A
								-	-	-	12	-	14	-	-						
MX150 ASSY RCP 2X8 LG B/15	334721687	B-LIGHT GRAY	GCP	PLR		M	R	-	-	-	-	-	-	-	-	SALEABLE		N/A	N/A	N/A	N/A
								-	-	-	-	-	14	-	-						
MX150 ASSY RCP 2X8 BK A/15	334721688	A-BLACK	GCP	PLR		M	R	-	2	-	-	-	-	-	-	SALEABLE		N/A	N/A	N/A	N/A
								-	-	-	-	-	-	-	-						
MX150 ASSY RCP 2X8 LG B/12	334721689	B-LIGHT GRAY	GCP	PLR		M	R	-	2	-	4	-	-	-	-	SALEABLE		N/A	N/A	N/A	N/A
								-	-	-	12	-	14	-	-						
MX150 ASSY RCP 2X8 LG B/14	334721690	B-LIGHT GRAY	GCP	PLR		M	R	-	2	-	-	-	-	-	-	SALEABLE		N/A	N/A	N/A	N/A
								-	-	-	-	-	14	-	-						
MX150 ASSY RCP 2X8 BK A/13	334721691	A-BLACK	GCP	PLR		M	R	-	2	-	4	-	-	-	-	SALEABLE		N/A	N/A	N/A	N/A
								-	-	-	12	-	-	-	-						
MX150 ASSY RCP 2X8 BK A/13	334721692	A-BLACK	GCP	PLR		M	R	-	-	-	4	-	-	-	8	SALEABLE		N/A	N/A	N/A	N/A
								-	-	-	12	-	-	-	-						
MX150 ASSY RCP 2X8 LG B/12	334721693	B-LIGHT GRAY	GCP	PLR		M	R	-	-	-	4	-	-	-	8	SALEABLE		N/A	N/A	N/A	N/A
								-	-	-	12	-	14	-	-						
MX150 ASSY RCP 2X8 LG B/14	334721694	B-LIGHT GRAY	GCP	PLR		M	R	-	-	-	-	-	-	-	8	SALEABLE		N/A	N/A	N/A	N/A
								-	-	-	-	-	14	-	-						
MX150 ASSY RCP 2X8 BK A/14	334721695	A-BLACK	GCP	PLR		M	R	-	2	-	-	-	-	-	8	SALEABLE		N/A	N/A	N/A	N/A
								-	-	-	-	-	-	-	-						
MX150 ASSY RCP 2X8 BK A/12	334721701	A-BLACK	GCP	PLR		M	R	-	2	-	4	-	-	-	8	SALEABLE		N/A	N/A	N/A	N/A
								-	-	-	12	-	-	-	-						
MX150 ASSY RCP 2X8 LG B/11	334721702	B-LIGHT GRAY	GCP	PLR		M	R	-	2	-	4	-	-	-	8	SALEABLE		N/A	N/A	N/A	N/A
								-	-	-	12	-	14	-	-						
MX150 ASSY RCP 2X8 LG B/13	334721703	B-LIGHT GRAY	GCP	PLR		M	R	-	2	-	-	-	-	-	8	SALEABLE		N/A	N/A	N/A	N/A
								-	-	-	-	-	14	-	-						
MX150 ASSY RCP 2X8 BK A/14	334721704	A-BLACK	GCP	PLR		M	R	-	2	-	4	-	-	-	-	SALEABLE		N/A	N/A	N/A	N/A
								-	-	-	-	-	-	-	-						
MX150 ASSY RCP 2X8 LG B/13	334721705	B-LIGHT GRAY	GCP	PLR		M	R	-	2	-	4	-	-	-	-	SALEABLE		N/A	N/A	N/A	N/A
								-	-	-	-	-	14	-	-						
MX150 ASSY RCP 2X8 BK A/9	334721706	A-BLACK	GCP	PLR		M	R	-	2	-	-	-	6	-	-	SALEABLE		N/A	N/A	N/A	N/A
								-	10	-	-	13	14	15	16						
MX150 ASSY RCP 2X8 BK A/8	334721707	A-BLACK	GCP	PLR		M	R	-	2	-	-	-	6	-	-	SALEABLE		N/A	N/A	N/A	N/A
								-	10	11	-	13	14	15	16						
MX150 ASSY RCP 2X8 BK A/11	334721708	A-BLACK	GCP	PLR		M	R	-	2	-	-	-	6	-	-	SALEABLE		N/A	N/A	N/A	N/A
								-	10	-	-	13	14	-	-						
MX150 ASSY RCP 2X8 BK A/14	334721709	A-BLACK	GCP	PLR		M	R	-	-	-	4	-	-	-	8	SALEABLE		N/A	N/A	N/A	N/A
								-	-	-	-	-	-	-	-						
MX150 ASSY RCP 2X8 BK A/13	334721710	A-BLACK	GCP	PLR		M	R	-	2	-	-	-	6	-	-	SALEABLE		N/A	N/A	N/A	N/A
								-	-	11	-	-	-	-	-						
MX150 ASSY RCP 2X8 BK A/14	334721711	A-BLACK	GCP	PLR		M	R	-	2	-	-	-	6	-	-	SALEABLE		N/A	N/A	N/A	N/A
								-	-	-	-	-	-	-	-						
MX150 ASSY RCP 2X8 CPA BK A/11	334721712	A-BLACK	GCP	PLR	CPA	M	R	-	-	-	-	5	6	7	8	SALEABLE		N/A	N/A	N/A	N/A
								-	-	-	-	13	-	-	-						
MX150 ASSY RCP 2X8 CPA BK A/8	334721713	A-BLACK	GCP	PLR	CPA	M	R	-	-	-	-	5	6	7	8	SALEABLE		N/A	N/A	N/A	N/A
								-	-	11	12	13	14	-	-						
MX150 ASSY RCP 2X8 CPA BK A/9	334721714	A-BLACK	GCP	PLR	CPA	M	R	-	-	-	-	5	6	7	8	SALEABLE		N/A	N/A	N/A	N/A
								-	-	-	12	13	14	-	-						

molex

MX150 RECEPTACLE 2X8 SEALED ASSEMBLY MAT SEAL
BOM AND PIN OUT SHEET

ASSEMBLY DESCRIPTION	ASSEMBLY PART NUMBER	COMPONENT						BLOCKED TERMINALS								STATUS	COMMENT	OPTIONAL ATTACHMENTS SOLD SEPARATELY			
		THE PRESENCE OF AN ABBREVIATION INDICATES THE PRESENCE OF THAT COMPONENT						CAVITY WITH A NUMBER INDICATES BLOCKED TERMINAL POSITION CAVITY WITHOUT A NUMBER INDICATES OPEN TERMINAL POSITION													
		HOUSING KEY/COLOR	GROMMET CAP	PLR	CPA	MAT SEAL	RING SEAL											BACKSHELL WITH RIBS	BACKSHELL WITHOUT RIBS	90^0 ADAPTOR WITH RIBS	90^0 ADAPTOR WITHOUT RIBS
MX150 ASSY RCP 2X8 CPA LG B/6	334721715	B-LIGHT GRAY	GCP	PLR	CPA	M	R	1	2	3	4	5	6	-	8	SALEABLE		N/A	N/A	N/A	N/A
								-	10	-	12	13	-	-	-						
MX150 ASSY RCP 2X8 CPA LG B/10	334721716	B-LIGHT GRAY	GCP	PLR	CPA	M	R	1	-	3	4	5	-	-	8	SALEABLE		N/A	N/A	N/A	N/A
								-	10	-	-	-	-	-	-						
MX150 ASSY RCP 2X8 CPA LG B/11	334721717	B-LIGHT GRAY	GCP	PLR	CPA	M	R	1	-	-	4	5	-	-	8	SALEABLE		N/A	N/A	N/A	N/A
								-	10	-	-	-	-	-	-						
MX150 ASSY RCP 2X8 CPA BK A/10	334721718	A-BLACK	GCP	PLR	CPA	M	R	-	-	-	-	5	6	7	8	SALEABLE		N/A	N/A	N/A	N/A
								-	-	11	-	13	-	-	-						
MX150 ASSY RCP 2X8 CPA BK A/11	334721719	A-BLACK	GCP	PLR	CPA	M	R	-	-	-	4	5	6	-	-	SALEABLE		N/A	N/A	N/A	N/A
								-	-	-	-	-	-	15	16						
MX150 ASSY RCP 2X8 CPA BK A/10	334721720	A-BLACK	GCP	PLR	CPA	M	R	-	-	3	4	5	6	-	-	SALEABLE		N/A	N/A	N/A	N/A
								-	-	-	-	-	-	15	16						
MX150 ASSY RCP 2X8 CPA BK A/11	334721721	A-BLACK	GCP	PLR	CPA	M	R	-	-	-	-	-	-	-	8	SALEABLE		N/A	N/A	N/A	N/A
								-	-	-	-	13	14	15	16						
MX150 ASSY RCP 2X8 CPA BK A/6	334721722	A-BLACK	GCP	PLR	CPA	M	R	1	2	3	4	5	6	-	8	SALEABLE		N/A	N/A	N/A	N/A
								-	-	-	-	13	-	15	16						
MX150 ASSY RCP 2X8 CPA BK A/10	334721723	A-BLACK	GCP	PLR	CPA	M	R	-	-	-	-	-	-	7	8	SALEABLE		N/A	N/A	N/A	N/A
								-	-	11	12	13	14	-	-						
MX150 ASSY RCP 2X8 CPA BK A/11	334721724	A-BLACK	GCP	PLR	CPA	M	R	-	-	-	-	-	-	7	8	SALEABLE		N/A	N/A	N/A	N/A
								-	-	-	12	13	14	-	-						
MX150 ASSY RCP 2X8 CPA BK A/13	334721725	A-BLACK	GCP	PLR	CPA	M	R	-	-	-	-	-	-	7	8	SALEABLE		N/A	N/A	N/A	N/A
								-	-	-	-	13	-	-	-						
MX150 ASSY RCP 2X8 CPA BK A/12	334721726	A-BLACK	GCP	PLR	CPA	M	R	-	-	-	-	-	-	7	8	SALEABLE		N/A	N/A	N/A	N/A
								-	-	11	-	13	-	-	-						
MX150 ASSY RCP 2X8 CPA LG B/12	334721728	B-LIGHT GRAY	GCP	PLR	CPA	M	R	-	-	-	4	5	-	-	8	SALEABLE		N/A	N/A	N/A	N/A
								-	-	-	12	-	-	-	-						
MX150 ASSY RCP 2X8 CPA LG B/7	334721729	B-LIGHT GRAY	GCP	PLR	CPA	M	R	1	2	-	4	5	6	-	8	SALEABLE		N/A	N/A	N/A	N/A
								-	10	-	12	13	-	-	-						
MX150 ASSY RCP 2X8 CPA LG B/6	334721730	B-LIGHT GRAY	GCP	PLR	CPA	M	R	-	2	-	4	5	6	-	8	SALEABLE		N/A	N/A	N/A	N/A
								-	10	11	12	13	-	-	16						
MX150 ASSY RCP 2X8 CPA LG B/12	334721731	B-LIGHT GRAY	GCP	PLR	CPA	M	R	-	-	-	4	5	-	-	-	SALEABLE		N/A	N/A	N/A	N/A
								-	-	-	12	13	-	-	-						
MX150 ASSY RCP 2X8 CPA LG B/8	334721732	B-LIGHT GRAY	GCP	PLR	CPA	M	R	-	2	-	4	5	6	-	8	SALEABLE		N/A	N/A	N/A	N/A
								-	10	-	12	13	-	-	-						
MX150 ASSY RCP 2X8 CPA LG B/14	334721733	B-LIGHT GRAY	GCP	PLR	CPA	M	R	-	-	-	-	-	6	-	-	SALEABLE		N/A	N/A	N/A	N/A
								-	-	11	-	-	-	-	-						
MX150 ASSY RCP 2X8 CPA LG B/13	334721734	B-LIGHT GRAY	GCP	PLR	CPA	M	R	-	-	3	-	-	6	-	-	SALEABLE		N/A	N/A	N/A	N/A
								-	-	11	-	-	-	-	-						
MX150 ASSY RCP 2X8 CPA LG B/7	334721735	B-LIGHT GRAY	GCP	PLR	CPA	M	R	-	2	3	4	5	6	-	8	SALEABLE		N/A	N/A	N/A	N/A
								-	10	-	12	13	-	-	-						
MX150 ASSY RCP 2X8 BK A/8	334721736	A-BLACK	GCP	PLR		M	R	-	2	-	4	5	6	-	-	SALEABLE		N/A	N/A	N/A	N/A
								-	10	-	12	13	14	-	-						
MX150 ASSY RCP 2X8 CPA LG B/4	334721737	B-LIGHT GRAY	GCP	PLR	CPA	M	R	1	2	3	4	5	6	-	8	SALEABLE		N/A	N/A	N/A	N/A
								-	10	11	12	13	-	-	16						
MX150 ASSY RCP 2X8 CPA LG B/15	334721738	B-LIGHT GRAY	GCP	PLR	CPA	M	R	-	-	-	-	-	-	-	-	SALEABLE		N/A	N/A	N/A	N/A
								-	10	-	-	-	-	-	-						
MX150 ASSY RCP 2X8 CPA LG B/11	334721739	B-LIGHT GRAY	GCP	PLR	CPA	M	R	-	-	-	4	5	-	-	-	SALEABLE		N/A	N/A	N/A	N/A
								-	10	-	12	13	-	-	-						
MX150 ASSY RCP 2X8 CPA BK A/14	334721740	A-BLACK	GCP	PLR	CPA	M	R	-	-	-	-	5	-	-	-	SALEABLE		N/A	N/A	N/A	N/A
								-	-	-	-	13	-	-	-						
MX150 ASSY RCP 2X8 CPA BK A/9	334721741	A-BLACK	GCP	PLR	CPA	M	R	-	-	-	-	-	-	7	8	SALEABLE		N/A	N/A	N/A	N/A
								-	-	11	12	13	14	15	-						
MX150 ASSY RCP 2X8 CPA BK A/10	334721742	A-BLACK	GCP	PLR	CPA	M	R	-	-	-	-	-	-	7	8	SALEABLE		N/A	N/A	N/A	N/A
								-	-	-	12	13	14	15	-						

molex

MX150 RECEPTACLE 2X8 SEALED ASSEMBLY MAT SEAL
BOM AND PIN OUT SHEET

ASSEMBLY DESCRIPTION	ASSEMBLY PART NUMBER	COMPONENT						BLOCKED TERMINALS								STATUS	COMMENT	OPTIONAL ATTACHMENTS SOLD SEPARATELY			
		THE PRESENCE OF AN ABBREVIATION INDICATES THE PRESENCE OF THAT COMPONENT						CAVITY WITH A NUMBER INDICATES BLOCKED TERMINAL POSITION CAVITY WITHOUT A NUMBER INDICATES OPEN TERMINAL POSITION													
		HOUSING KEY/COLOR	GROMMET CAP	PLR	CPA	MAT SEAL	RING SEAL											BACKSHELL WITH RIBS	BACKSHELL WITHOUT RIBS	90^0 ADAPTOR WITH RIBS	90^0 ADAPTOR WITHOUT RIBS
MX150 ASSY RCP 2X8 CPA BK A/14	334721743	A-BLACK	GCP	PLR	CPA	M	R	-	-	-	-	-	-	7	8	SALEABLE		N/A	N/A	N/A	N/A
								-	-	-	-	-	-	-	-						
MX150 ASSY RCP 2X8 CPA BK A/15	334721744	A-BLACK	GCP	PLR	CPA	M	R	-	-	-	-	-	-	-	-	SALEABLE		N/A	N/A	N/A	N/A
								-	-	11	-	-	-	-	-						
MX150 ASSY RCP 2X8 BK A/12	334721745	A-BLACK	GCP	PLR		M	R	-	-	-	-	-	-	-	-	SALEABLE		N/A	N/A	N/A	N/A
								-	10	11	-	-	-	15	16						
MX150 ASSY RCP 2X8 BK A/4	334721746	A-BLACK	GCP	PLR		M	R	1	2	3	4	5	6	-	-	SALEABLE		N/A	N/A	N/A	N/A
								-	-	11	12	13	14	15	16						
MX150 ASSY RCP 2X8 BK A/5	334721747	A-BLACK	GCP	PLR		M	R	1	2	3	4	5	6	-	8	SALEABLE		N/A	N/A	N/A	N/A
								9	-	-	-	-	14	15	16						
MX150 ASSY RCP 2X8 BK A/5	334721748	A-BLACK	GCP	PLR		M	R	1	2	3	4	5	6	-	-	SALEABLE		N/A	N/A	N/A	N/A
								-	-	-	12	13	14	15	16						
MX150 ASSY RCP 2X8 BK A/6	334721749	A-BLACK	GCP	PLR		M	R	-	-	-	-	-	-	7	8	SALEABLE		N/A	N/A	N/A	N/A
								9	10	11	12	13	14	15	16						
MX150 ASSY RCP 2X8 BK A/7	334721750	A-BLACK	GCP	PLR		M	R	1	2	3	4	5	6	-	-	SALEABLE		N/A	N/A	N/A	N/A
								-	-	-	-	-	14	15	16						
MX150 ASSY RCP 2X8 BK A/7	334721751	A-BLACK	GCP	PLR		M	R	-	-	-	-	-	-	-	8	SALEABLE		N/A	N/A	N/A	N/A
								9	10	11	12	13	14	15	16						
MX150 ASSY RCP 2X8 BK A/9	334721752	A-BLACK	GCP	PLR		M	R	-	-	-	-	-	-	-	-	SALEABLE		N/A	N/A	N/A	N/A
								-	10	11	12	13	14	15	16						
MX150 ASSY RCP 2X8 BK A/10	334721753	A-BLACK	GCP	PLR		M	R	-	-	-	-	-	-	-	-	SALEABLE		N/A	N/A	N/A	N/A
								-	-	11	12	13	14	15	16						
MX150 ASSY RCP 2X8 BK A/10	334721754	A-BLACK	GCP	PLR		M	R	1	2	3	4	5	6	-	-	SALEABLE		N/A	N/A	N/A	N/A
								-	-	-	-	-	-	-	-						
MX150 ASSY RCP 2X8 BK A/11	334721755	A-BLACK	GCP	PLR		M	R	-	-	-	-	-	-	-	8	SALEABLE		N/A	N/A	N/A	N/A
								9	-	-	-	-	14	15	16						
MX150 ASSY RCP 2X8 BK A/11	334721756	A-BLACK	GCP	PLR		M	R	-	-	-	-	-	-	-	-	SALEABLE		N/A	N/A	N/A	N/A
								-	-	-	12	13	14	15	16						
MX150 ASSY RCP 2X8 BK A/12	334721757	A-BLACK	GCP	PLR		M	R	-	-	-	-	-	-	7	8	SALEABLE		N/A	N/A	N/A	N/A
								9	10	-	-	-	-	-	-						
MX150 ASSY RCP 2X8 BK A/13	334721758	A-BLACK	GCP	PLR		M	R	-	-	-	-	-	-	-	-	SALEABLE		N/A	N/A	N/A	N/A
								-	-	-	-	-	14	15	16						
MX150 ASSY RCP 2X8 BK A/12	334721759	A-BLACK	GCP	PLR		M	R	-	2	-	-	-	6	7	8	SALEABLE		N/A	N/A	N/A	N/A
								-	-	-	-	-	-	-	-						
MX150 ASSY RCP 2X8 BK A/10	334721760	A-BLACK	GCP	PLR		M	R	-	2	-	4	-	6	7	8	SALEABLE		N/A	N/A	N/A	N/A
								-	-	-	12	-	-	-	-						
MX150 ASSY RCP 2X8 BK A/5	334721761	A-BLACK	GCP	PLR		M	R	-	2	-	-	5	6	7	8	SALEABLE		N/A	N/A	N/A	N/A
								9	10	-	12	-	14	15	16						
MX150 ASSY RCP 2X8 BK A/7	334721762	A-BLACK	GCP	PLR		M	R	-	2	-	-	5	6	7	8	SALEABLE		N/A	N/A	N/A	N/A
								-	10	-	12	-	14	15	-						
MX150 ASSY RCP 2X8 BK A/11	334721763	A-BLACK	GCP	PLR		M	R	-	2	-	-	-	-	-	-	SALEABLE		N/A	N/A	N/A	N/A
								9	10	-	-	-	-	15	16						
MX150 ASSY RCP 2X8 BK A/13	334721764	A-BLACK	GCP	PLR		M	R	-	2	-	-	-	-	-	-	SALEABLE		N/A	N/A	N/A	N/A
								-	10	-	-	-	-	15	-						
MX150 ASSY RCP 2X8 BK A/6	334721765	A-BLACK	GCP	PLR		M	R	1	2	3	4	5	6	7	8	SALEABLE		N/A	N/A	N/A	N/A
								9	10	-	-	-	-	-	-						
MX150 ASSY RCP 2X8 BK A/3	334721766	A-BLACK	GCP	PLR		M	R	1	2	3	4	5	6	-	-	SALEABLE		N/A	N/A	N/A	N/A
								-	10	11	12	13	14	15	16						
MX150 ASSY RCP 2X8 DG C/16	334721767	C-DARK GRAY	GCO	PLR		M	R	-	-	-	-	-	-	-	-	SALEABLE		N/A	N/A	N/A	N/A
								-	-	-	-	-	-	-	-						
MX150 ASSY RCP 2X8 SG D/16	334721768	D-STONE GRAY	GCO	PLR		M	R	-	-	-	-	-	-	-	-	SALEABLE		N/A	N/A	N/A	N/A
								-	-	-	-	-	-	-	-						
MX150 ASSY RCP 2X8 CPA DG C/16	334721769	C-DARK GRAY	GCO	PLR	CPA	M	R	-	-	-	-	-	-	-	-	SALEABLE		N/A	N/A	N/A	N/A
								-	-	-	-	-	-	-	-						

molex

MX150 RECEPTACLE 2X8 SEALED ASSEMBLY MAT SEAL
BOM AND PIN OUT SHEET

ASSEMBLY DESCRIPTION	ASSEMBLY PART NUMBER	COMPONENT						BLOCKED TERMINALS								STATUS	COMMENT	OPTIONAL ATTACHMENTS SOLD SEPARATELY			
		THE PRESENCE OF AN ABBREVIATION INDICATES THE PRESENCE OF THAT COMPONENT						CAVITY WITH A NUMBER INDICATES BLOCKED TERMINAL POSITION CAVITY WITHOUT A NUMBER INDICATES OPEN TERMINAL POSITION													
		HOUSING KEY/COLOR	GROMMET CAP	PLR	CPA	MAT SEAL	RING SEAL											BACKSHELL WITH RIBS	BACKSHELL WITHOUT RIBS	90^0 ADAPTOR WITH RIBS	90^0 ADAPTOR WITHOUT RIBS
MX150 ASSY RCP 2X8 CPA SG D/16	334721770	D-STONE GRAY	GCO	PLR	CPA	M	R	-	-	-	-	-	-	-	-	SALEABLE		N/A	N/A	N/A	N/A
								-	-	-	-	-	-	-	-						
MX150 ASSY RCP 2X8 LG B/2	334721771	B-LIGHT GRAY	GCP	PLR		M	R	1	2	3	4	5	6	7	8	SALEABLE		N/A	N/A	N/A	N/A
								9	10	-	12	-	14	15	16						
MX150 ASSY RCP 2X8 LG B/3	334721772	B-LIGHT GRAY	GCP	PLR		M	R	1	2	3	4	5	6	7	8	SALEABLE		N/A	N/A	N/A	N/A
								9	10	-	12	-	14	15	-						
MX150 ASSY RCP 2X8 CPA LG B/10	334721773	B-LIGHT GRAY	GCP	PLR	CPA	M	R	-	-	-	4	5	-	-	-	SALEABLE		N/A	N/A	N/A	N/A
								-	10	11	12	13	-	-	-						
MX150 ASSY RCP 2X8 CPA LG B/9	334721774	B-LIGHT GRAY	GCP	PLR	CPA	M	R	-	-	-	4	5	-	-	8	SALEABLE		N/A	N/A	N/A	N/A
								-	10	11	12	13	-	-	-						
MX150 ASSY RCP 2X8 CPA LG B/8	334721775	B-LIGHT GRAY	GCP	PLR	CPA	M	R	-	-	-	4	5	-	-	8	SALEABLE		N/A	N/A	N/A	N/A
								-	10	11	12	13	-	-	16						
MX150 ASSY RCP 2X8 CPA LG B/10	334721776	B-LIGHT GRAY	GCP	PLR	CPA	M	R	-	-	-	4	5	-	-	8	SALEABLE		N/A	N/A	N/A	N/A
								-	10	-	12	13	-	-	-						
MX150 ASSY RCP 2X8 CPA LG B/11	334721777	B-LIGHT GRAY	GCP	PLR	CPA	M	R	-	-	-	4	5	-	-	-	SALEABLE		N/A	N/A	N/A	N/A
								-	-	11	12	13	-	-	-						
MX150 ASSY RCP 2X8 BK A/10	334721778	A-BLACK	GCP	PLR		M	R	-	-	3	4	-	-	-	-	SALEABLE		N/A	N/A	N/A	N/A
								9	10	-	-	-	-	15	16						
MX150 ASSY RCP 2X8 BK A/7	334721779	A-BLACK	GCP	PLR		M	R	-	2	-	4	-	6	7	-	SALEABLE		N/A	N/A	N/A	N/A
								9	-	11	-	13	-	15	16						
MX150 ASSY RCP 2X8 CPA BK A/13	334721780	A-BLACK	GCP	PLR	CPA	M	R	-	-	-	-	-	-	-	-	SALEABLE		N/A	N/A	N/A	N/A
								-	-	-	-	-	14	15	16						
MX150 ASSY RCP 2X8 BK A/13	334721781	A-BLACK	GCP	PLR		M	R	-	-	-	4	5	-	7	-	SALEABLE		N/A	N/A	N/A	N/A
								-	-	-	-	-	-	-	-						
MX150 ASSY RCP 2X8 CPA BK A/11	334721782	A-BLACK	GCP	PLR	CPA	M	R	-	-	-	-	-	-	-	-	SALEABLE		N/A	N/A	N/A	N/A
								-	-	-	12	13	14	15	16						
MX150 ASSY RCP 2X8 BK A/4	334721783	A-BLACK	GCP	PLR		M	R	1	2	3	4	-	-	7	8	SALEABLE		N/A	N/A	N/A	N/A
								9	10	11	12	-	-	15	16						
MX150 ASSY RCP 2X8 BK A/6	334721784	A-BLACK	GCP	PLR		M	R	1	2	3	4	-	-	-	8	SALEABLE		N/A	N/A	N/A	N/A
								9	10	11	12	-	-	-	16						
MX150 ASSY RCP 2X8 BK A/9	334721785	A-BLACK	GCP	PLR		M	R	-	2	3	4	-	-	-	-	SALEABLE		N/A	N/A	N/A	N/A
								9	10	-	-	-	-	15	16						
MX150 ASSY RCP 2X8 BK A/3	334721786	A-BLACK	GCP	PLR		M	R	-	2	3	4	5	6	7	8	SALEABLE		N/A	N/A	N/A	N/A
								9	10	-	12	-	14	15	16						
MX150 ASSY RCP 2X8 BK A/10	334721787	A-BLACK	GCP	PLR		M	R	-	-	-	-	5	-	-	8	SALEABLE		N/A	N/A	N/A	N/A
								-	10	11	-	13	-	15	-						
MX150 ASSY RCP 2X8 BK A/9	334721788	A-BLACK	GCP	PLR		M	R	-	-	3	-	5	-	-	8	SALEABLE		N/A	N/A	N/A	N/A
								-	10	11	-	13	-	15	-						
MX150 ASSY RCP 2X8 BK A/11	334721789	A-BLACK	GCP	PLR		M	R	-	-	-	-	5	-	-	8	SALEABLE		N/A	N/A	N/A	N/A
								-	10	11	-	-	14	-	-						
MX150 ASSY RCP 2X8 BK A/6	334721790	A-BLACK	GCP	PLR		M	R	-	-	3	4	5	-	-	8	SALEABLE		N/A	N/A	N/A	N/A
								-	10	11	12	13	14	15	-						
MX150 ASSY RCP 2X8 BK A/10	334721791	A-BLACK	GCP	PLR		M	R	-	-	3	4	-	-	-	-	SALEABLE		N/A	N/A	N/A	N/A
								9	10	-	-	-	-	15	16						
MX150 ASSY RCP 2X8 BK A/7	334721792	A-BLACK	GCP	PLR		M	R	1	-	3	-	5	-	7	8	SALEABLE		N/A	N/A	N/A	N/A
								-	10	11	-	-	14	15	-						
MX150 ASSY RCP 2X8 BK A/12	334721793	A-BLACK	GCP	PLR		M	R	-	-	-	-	-	-	-	-	SALEABLE		N/A	N/A	N/A	N/A
								-	-	-	-	13	14	15	16						
MX150 ASSY RCP 2X8 BK A/10	334721794	A-BLACK	GCP	PLR		M	R	-	2	-	4	-	6	7	8	SALEABLE		N/A	N/A	N/A	N/A
								-	-	-	12	-	-	-	-						
MX150 ASSY RCP 2X8 CPA BK A/14	334721795	A-BLACK	GCP	PLR	CPA	M	R	-	-	-	-	-	-	-	-	SALEABLE		N/A	N/A	N/A	N/A
								-	-	-	12	-	14	-	-						
MX150 ASSY RCP 2X8 BK A/8	334721796	A-BLACK	GCP	PLR		M	R	1	-	-	-	5	-	7	8	SALEABLE		N/A	N/A	N/A	N/A
								-	10	11	-	-	14	15	-						

molex

MX150 RECEPTACLE 2X8 SEALED ASSEMBLY MAT SEAL
BOM AND PIN OUT SHEET

ASSEMBLY DESCRIPTION	ASSEMBLY PART NUMBER	COMPONENT: THE PRESENCE OF AN ABBREVIATION INDICATES THE PRESENCE OF THAT COMPONENT						BLOCKED TERMINALS: CAVITY WITH A NUMBER INDICATES BLOCKED TERMINAL POSITION; CAVITY WITHOUT A NUMBER INDICATES OPEN TERMINAL POSITION								STATUS	COMMENT	OPTIONAL ATTACHMENTS SOLD SEPARATELY			
		HOUSING KEY/COLOR	GROMMET CAP	PLR	CPA	MAT SEAL	RING SEAL											BACKSHELL WITH RIBS	BACKSHELL WITHOUT RIBS	90^0 ADAPTOR WITH RIBS	90^0 ADAPTOR WITHOUT RIBS
MX150 ASSY RCP 2X8 BK A/12	334721797	A-BLACK	GCP	PLR		M	R	-	-	-	-	5	-	-	8	SALEABLE		N/A	N/A	N/A	N/A
								-	10	11	-	-	-	-	-						
MX150 ASSY RCP 2X8 BK A/10	334721798	A-BLACK	GCP	PLR		M	R	1	-	3	-	5	-	7	-	SALEABLE		N/A	N/A	N/A	N/A
								-	-	11	-	-	-	15	-						
MX150 ASSY RCP 2X8 CPA LG B/11	334721799	B-LIGHT GRAY	GCP	PLR	CPA	M	R	-	2	-	4	-	-	-	8	SALEABLE		N/A	N/A	N/A	N/A
								-	-	-	12	-	14	-	-						
MX150 ASSY RCP 2X8 BK A/13	334721800	A-BLACK	GCP	PLR		M	R	1	-	3	-	5	-	-	-	SALEABLE		N/A	N/A	N/A	N/A
								-	-	-	-	-	-	-	-						
MX150 ASSY RCP 2X8 CPA LG B/11	334721801	B-LIGHT GRAY	GCP	PLR	CPA	M	R	-	-	-	4	5	-	-	8	SALEABLE		N/A	N/A	N/A	N/A
								-	-	-	12	13	-	-	-						
MX150 ASSY RCP 2X8 CPA LG B/9	334721802	B-LIGHT GRAY	GCP	PLR	CPA	M	R	-	2	-	4	5	6	-	8	SALEABLE		N/A	N/A	N/A	N/A
								-	-	-	12	13	-	-	-						
MX150 ASSY RCP 2X8 CPA LG B/8	334721803	B-LIGHT GRAY	GCP	PLR	CPA	M	R	-	2	-	4	5	6	-	8	SALEABLE		N/A	N/A	N/A	N/A
								-	10	-	12	13	-	-	-						
MX150 ASSY RCP 2X8 CPA LG B/8	334721804	B-LIGHT GRAY	GCP	PLR	CPA	M	R	-	2	3	4	5	6	-	8	SALEABLE		N/A	N/A	N/A	N/A
								-	-	-	12	13	-	-	-						
MX150 ASSY RCP 2X8 BK A/14	334721805	A-BLACK	GCP	PLR		M	R	-	-	-	-	-	-	-	-	SALEABLE		N/A	N/A	N/A	N/A
								-	-	-	-	-	14	15	-						
MX150 ASSY RCP 2X8 CPA BK A/8	334721806	A-BLACK	GCP	PLR	CPA	M	R	1	-	3	4	-	-	-	-	SALEABLE		N/A	N/A	N/A	N/A
								-	-	-	12	13	14	15	16						
MX150 ASSY RCP 2X8 CPA BK A/4	334721807	A-BLACK	GCP	PLR	CPA	M	R	1	2	3	4	5	-	-	8	SALEABLE		N/A	N/A	N/A	N/A
								-	-	11	12	13	14	15	16						
MX150 ASSY RCP 2X8 CPA BK A/10	334721808	A-BLACK	GCP	PLR	CPA	M	R	-	2	3	4	5	-	-	8	SALEABLE		N/A	N/A	N/A	N/A
								-	-	11	-	-	-	-	-						
MX150 ASSY RCP 2X8 CPA BK A/14	334721809	A-BLACK	GCP	PLR	CPA	M	R	-	-	3	4	-	-	-	-	SALEABLE		N/A	N/A	N/A	N/A
								-	-	-	-	-	-	-	-						
MX150 ASSY RCP 2X8 BK A/4	334721810	A-BLACK	GCP	PLR		M	R	1	2	3	4	5	6	7	8	SALEABLE		N/A	N/A	N/A	N/A
								-	-	-	-	13	14	15	16						
MX150 ASSY RCP 2X8 BK A/10	334721811	A-BLACK	GCP	PLR		M	R	1	2	3	-	-	-	-	-	SALEABLE		N/A	N/A	N/A	N/A
								-	-	-	-	13	14	15	-						
MX150 ASSY RCP 2X8 BK A/11	334721812	A-BLACK	GCP	PLR		M	R	1	2	-	-	-	-	-	-	SALEABLE		N/A	N/A	N/A	N/A
								-	-	-	-	13	14	15	-						
MX150 ASSY RCP 2X8 LG B/12	334721813	B-LIGHT GRAY	GCP	PLR		M	R	-	-	-	-	-	6	7	8	SALEABLE		N/A	N/A	N/A	N/A
								-	-	11	-	-	-	-	-						
MX150 ASSY RCP 2X8 LG B/11	334721814	B-LIGHT GRAY	GCP	PLR		M	R	-	-	-	-	-	6	7	8	SALEABLE		N/A	N/A	N/A	N/A
								-	-	11	-	-	14	-	-						
MX150 ASSY RCP 2X8 LG B/9	334721815	B-LIGHT GRAY	GCP	PLR		M	R	-	-	-	-	-	6	-	-	SALEABLE		N/A	N/A	N/A	N/A
								9	-	11	12	13	-	15	16						
MX150 ASSY RCP 2X8 LG B/7	334721816	B-LIGHT GRAY	GCP	PLR		M	R	-	-	-	-	-	6	-	-	SALEABLE		N/A	N/A	N/A	N/A
								9	10	11	12	13	14	15	16						
MX150 ASSY RCP 2X8 LG B/2	334721817	B-LIGHT GRAY	GCP	PLR		M	R	1	2	3	4	5	6	-	-	SALEABLE		N/A	N/A	N/A	N/A
								9	10	11	12	13	14	15	16						
MX150 ASSY RCP 2X8 BK A/8	334721818	A-BLACK	GCP	PLR		M	R	-	-	-	-	-	-	-	-	SALEABLE		N/A	N/A	N/A	N/A
								9	10	11	12	13	14	15	16						
MX150 ASSY RCP 2X8 CPA BK A/3	334721819	A-BLACK	GCP	PLR	CPA	M	R	-	-	-	4	5	6	7	8	SALEABLE		N/A	N/A	N/A	N/A
								9	10	11	12	13	14	15	16						
MX150 ASSY RCP 2X8 CPA BK A/9	334721820	A-BLACK	GCP	PLR	CPA	M	R	-	-	-	-	-	-	-	8	SALEABLE		N/A	N/A	N/A	N/A
								9	-	-	12	13	14	15	16						
MX150 ASSY RCP 2X8 CPA LG B/11	334721821	B-LIGHT GRAY	GCP	PLR	CPA	M	R	-	-	-	4	5	-	7	-	SALEABLE		N/A	N/A	N/A	N/A
								-	-	-	12	13	-	-	-						
MX150 ASSY RCP 2X8 CPA LG B/10	334721822	B-LIGHT GRAY	GCP	PLR	CPA	M	R	-	-	-	4	5	-	7	-	SALEABLE		N/A	N/A	N/A	N/A
								-	10	-	12	13	-	-	-						
MX150 ASSY RCP 2X8 CPA LG B/9	334721823	B-LIGHT GRAY	GCP	PLR	CPA	M	R	-	-	-	4	5	-	7	8	SALEABLE		N/A	N/A	N/A	N/A
								-	10	-	12	13	-	-	-						

molex

MX150 RECEPTACLE 2X8 SEALED ASSEMBLY MAT SEAL
BOM AND PIN OUT SHEET

ASSEMBLY DESCRIPTION	ASSEMBLY PART NUMBER	COMPONENT THE PRESENCE OF AN ABBREVIATION INDICATES THE PRESENCE OF THAT COMPONENT						BLOCKED TERMINALS CAVITY WITH A NUMBER INDICATES BLOCKED TERMINAL POSITION CAVITY WITHOUT A NUMBER INDICATES OPEN TERMINAL POSITION								STATUS	COMMENT	OPTIONAL ATTACHMENTS SOLD SEPARATELY			
		HOUSING KEY/COLOR	GROMMET CAP	PLR	CPA	MAT SEAL	RING SEAL											BACKSHELL WITH RIBS	BACKSHELL WITHOUT RIBS	90^0 ADAPTOR WITH RIBS	90^0 ADAPTOR WITHOUT RIBS
MX150 ASSY RCP 2X8 CPA LG B/8	334721824	B-LIGHT GRAY	GCP	PLR	CPA	M	R	-	-	-	4	5	-	7	8	SALEABLE		N/A	N/A	N/A	N/A
								9	10	-	12	13	-	-	-						
MX150 ASSY RCP 2X8 CPA LG B/6	334721825	B-LIGHT GRAY	GCP	PLR	CPA	M	R	-	2	-	4	5	6	7	8	SALEABLE		N/A	N/A	N/A	N/A
								9	10	-	12	13	-	-	-						
MX150 ASSY RCP 2X8 BK A/5	334721826	A-BLACK	GCP	PLR		M	R	1	2	3	4	5	6	-	-	SALEABLE		N/A	N/A	N/A	N/A
								9	-	-	-	13	14	15	16						
MX150 ASSY RCP 2X8 BK A/2	334721827	A-BLACK	GCP	PLR		M	R	1	2	3	4	5	6	-	-	SALEABLE		N/A	N/A	N/A	N/A
								9	10	11	12	13	14	15	16						
MX150 ASSY RCP 2X8 BK A/10	334721828	A-BLACK	GCP	PLR		M	R	-	-	-	-	-	6	-	-	SALEABLE		N/A	N/A	N/A	N/A
								-	10	11	12	13	14	-	-						
MX150 ASSY RCP 2X8 BK A/5	334721829	A-BLACK	GCP	PLR		M	R	1	2	3	4	5	6	-	-	SALEABLE		N/A	N/A	N/A	N/A
								-	10	11	12	13	14	-	-						
MX150 ASSY RCP 2X8 BK A/8	334721830	A-BLACK	GCP	PLR		M	R	1	2	3	4	5	6	-	-	SALEABLE		N/A	N/A	N/A	N/A
								-	-	-	-	13	14	-	-						
MX150 ASSY RCP 2X8 BK A/7	334721831	A-BLACK	GCP	PLR		M	R	-	-	-	-	-	6	-	-	SALEABLE		N/A	N/A	N/A	N/A
								9	10	11	12	13	14	15	16						
MX150 ASSY RCP 2X8 BK A/13	334721832	A-BLACK	GCP	PLR		M	R	-	2	-	-	-	-	-	8	SALEABLE		N/A	N/A	N/A	N/A
								-	-	-	-	-	-	-	16						
MX150 ASSY RCP 2X8 BK A/7	334721833	A-BLACK	GCP	PLR		M	R	1	2	3	4	5	6	-	8	SALEABLE		N/A	N/A	N/A	N/A
								-	10	-	-	-	-	-	16						
MX150 ASSY RCP 2X8 BK A/5	334721834	A-BLACK	GCP	PLR		M	R	1	2	3	4	5	6	7	8	SALEABLE		N/A	N/A	N/A	N/A
								9	10	-	-	-	-	-	16						
MX150 ASSY RCP 2X8 BK A/4	334721835	A-BLACK	GCP	PLR		M	R	1	2	3	4	5	6	7	-	SALEABLE		N/A	N/A	N/A	N/A
								9	-	11	-	13	-	15	16						
MX150 ASSY RCP 2X8 LG B/8	334721836	B-LIGHT GRAY	GCP	PLR		M	R	-	-	3	4	5	6	-	-	SALEABLE		N/A	N/A	N/A	N/A
								-	10	11	12	13	-	-	-						
MX150 ASSY RCP 2X8 BK A/12	334721837	A-BLACK	GCP	PLR		M	R	-	-	-	-	-	-	-	-	SALEABLE		N/A	N/A	N/A	N/A
								-	-	11	12	13	14	-	-						
MX150 ASSY RCP 2X8 BK A/14	334721838	A-BLACK	GCP	PLR		M	R	-	-	-	-	-	-	-	-	SALEABLE		N/A	N/A	N/A	N/A
								-	-	11	-	-	14	-	-						
MX150 ASSY RCP 2X8 BK A/9	334721839	A-BLACK	GCP	PLR		M	R	1	-	3	-	-	-	-	-	SALEABLE		N/A	N/A	N/A	N/A
								-	-	11	12	13	-	15	16						
MX150 ASSY RCP 2X8 BK A/6	334721840	A-BLACK	GCP	PLR		M	R	1	-	3	-	-	-	-	8	SALEABLE		N/A	N/A	N/A	N/A
								9	-	11	12	13	14	15	16						
MX150 ASSY RCP 2X8 BK A/10	334721841	A-BLACK	GCP	PLR		M	R	1	2	-	-	5	6	7	8	SALEABLE		N/A	N/A	N/A	N/A
								-	-	-	-	-	-	-	-						
MX150 ASSY RCP 2X8 BK A/12	334721842	A-BLACK	GCP	PLR		M	R	-	-	3	4	-	-	-	-	SALEABLE		N/A	N/A	N/A	N/A
								-	-	11	12	-	-	-	-						
MX150 ASSY RCP 2X8 BK A/11	334721843	A-BLACK	GCP	PLR		M	R	-	-	-	-	-	-	-	-	SALEABLE		N/A	N/A	N/A	N/A
								9	-	-	-	13	14	15	16						
MX150 ASSY RCP 2X8 BK A/6	334721844	A-BLACK	GCP	PLR		M	R	-	-	3	4	-	-	-	-	SALEABLE		N/A	N/A	N/A	N/A
								9	10	11	12	13	14	15	16						
MX150 ASSY RCP 2X8 LG B/5	334721845	B-LIGHT GRAY	GCP	PLR		M	R	-	-	3	4	5	6	-	8	SALEABLE		N/A	N/A	N/A	N/A
								9	10	11	12	13	14	-	-						
MX150 ASSY RCP 2X8 BK A/12	334721846	A-BLACK	GCP	PLR		M	R	-	-	-	-	-	-	-	-	SALEABLE		N/A	N/A	N/A	N/A
								9	10	-	-	-	-	15	16						
MX150 ASSY RCP 2X8 BK A/14	334721847	A-BLACK	GCP	PLR		M	R	-	-	-	-	-	-	-	-	SALEABLE		N/A	N/A	N/A	N/A
								-	10	-	-	-	-	15	-						
MX150 ASSY RCP 2X8 BK A/2	334721848	A-BLACK	GCP	PLR		M	R	1	2	3	4	5	6	7	8	SALEABLE		N/A	N/A	N/A	N/A
								9	10	11	-	-	14	15	16						
MX150 ASSY RCP 2X8 BK A/11	334721849	A-BLACK	GCP	PLR		M	R	-	2	-	-	-	-	-	8	SALEABLE		N/A	N/A	N/A	N/A
								-	-	-	-	-	14	15	16						
MX150 ASSY RCP 2X8 BK A/8	334721850	A-BLACK	GCP	PLR		M	R	1	-	3	-	-	-	-	-	SALEABLE		N/A	N/A	N/A	N/A
								9	-	11	12	13	-	15	16						

molex

MX150 RECEPTACLE 2X8 SEALED ASSEMBLY MAT SEAL
BOM AND PIN OUT SHEET

ASSEMBLY DESCRIPTION	ASSEMBLY PART NUMBER	COMPONENT THE PRESENCE OF AN ABBREVIATION INDICATES THE PRESENCE OF THAT COMPONENT						BLOCKED TERMINALS CAVITY WITH A NUMBER INDICATES BLOCKED TERMINAL POSITION CAVITY WITHOUT A NUMBER INDICATES OPEN TERMINAL POSITION								STATUS	COMMENT	OPTIONAL ATTACHMENTS SOLD SEPARATELY			
		HOUSING KEY/COLOR	GROMMET CAP	PLR	CPA	MAT SEAL	RING SEAL											BACKSHELL WITH RIBS	BACKSHELL WITHOUT RIBS	90^0 ADAPTOR WITH RIBS	90^0 ADAPTOR WITHOUT RIBS
MX150 ASSY RCP 2X8 BK A/5	334721851	A-BLACK	GCP	PLR		M	R	1	2	3	4	5	6	-	8	SALEABLE		N/A	N/A	N/A	N/A
								-	10	-	-	-	14	15	16						
MX150 ASSY RCP 2X8 BK A/3	334721852	A-BLACK	GCP	PLR		M	R	1	2	-	-	5	-	7	8	SALEABLE		N/A	N/A	N/A	N/A
								9	10	11	12	13	14	15	16						
MX150 ASSY RCP 2X8 BK A/5	334721853	A-BLACK	GCP	PLR		M	R	-	2	-	-	5	-	7	-	SALEABLE		N/A	N/A	N/A	N/A
								9	10	11	12	13	14	15	16						
MX150 ASSY RCP 2X8 BK A/11	334721854	A-BLACK	GCP	PLR		M	R	-	2	-	-	5	-	7	-	SALEABLE		N/A	N/A	N/A	N/A
								9	-	-	-	-	-	-	16						
MX150 ASSY RCP 2X8 BK A/13	334721855	A-BLACK	GCP	PLR		M	R	-	-	-	-	5	-	7	-	SALEABLE		N/A	N/A	N/A	N/A
								-	-	-	-	-	-	-	16						
MX150 ASSY RCP 2X8 BK A/12	334721856	A-BLACK	GCP	PLR		M	R	-	2	-	-	-	-	7	-	SALEABLE		N/A	N/A	N/A	N/A
								9	-	-	-	-	-	-	16						
MX150 ASSY RCP 2X8 BK A/14	334721857	A-BLACK	GCP	PLR		M	R	-	-	-	-	-	-	7	-	SALEABLE		N/A	N/A	N/A	N/A
								-	-	-	-	-	-	-	16						
MX150 ASSY RCP 2X8 BK A/6	334721858	A-BLACK	GCP	PLR		M	R	-	2	-	-	5	-	7	-	SALEABLE		N/A	N/A	N/A	N/A
								9	-	11	12	13	14	15	16						
MX150 ASSY RCP 2X8 BK A/9	334721859	A-BLACK	GCP	PLR		M	R	-	2	-	-	5	-	-	-	SALEABLE		N/A	N/A	N/A	N/A
								9	-	-	12	13	14	15	-						
MX150 ASSY RCP 2X8 BK A/13	334721860	A-BLACK	GCP	PLR		M	R	-	2	-	-	5	-	-	-	SALEABLE		N/A	N/A	N/A	N/A
								9	-	-	-	-	-	-	-						
MX150 ASSY RCP 2X8 BK A/14	334721861	A-BLACK	GCP	PLR		M	R	-	2	-	-	-	-	-	-	SALEABLE		N/A	N/A	N/A	N/A
								9	-	-	-	-	-	-	-						
MX150 ASSY RCP 2X8 BK A/13	334721862	A-BLACK	GCP	PLR		M	R	-	2	-	-	-	-	7	-	SALEABLE		N/A	N/A	N/A	N/A
								-	-	-	-	-	-	-	16						
MX150 ASSY RCP 2X8 BK A/7	334721863	A-BLACK	GCP	PLR		M	R	1	-	3	-	-	-	-	8	SALEABLE		N/A	N/A	N/A	N/A
								-	-	11	12	13	14	15	16						
MX150 ASSY RCP 2X8 BK A/9	334721864	A-BLACK	GCP	PLR		M	R	-	-	-	-	-	-	-	-	SALEABLE		N/A	N/A	N/A	N/A
								9	-	11	12	13	14	15	16						
MX150 ASSY RCP 2X8 BK A/7	334721865	A-BLACK	GCP	PLR		M	R	1	-	-	4	-	6	7	8	SALEABLE		N/A	N/A	N/A	N/A
								-	10	-	-	13	14	15	-						
MX150 ASSY RCP 2X8 CPA BK A/15	334721866	A-BLACK	GCP	PLR	CPA	M	R	-	-	-	-	5	-	-	-	SALEABLE		N/A	N/A	N/A	N/A
								-	-	-	-	-	-	-	-						
MX150 ASSY RCP 2X8 BK A/7	334721867	A-BLACK	GCP	PLR		M	R	-	2	-	-	5	-	7	-	SALEABLE		N/A	N/A	N/A	N/A
								9	-	-	12	13	14	15	16						
MX150 ASSY RCP 2X8 CPA BK A/2	334721868	A-BLACK	GCP	PLR	CPA	M	R	1	2	3	4	-	6	7	-	SALEABLE		N/A	N/A	N/A	N/A
								9	10	11	12	13	14	15	16						
MX150 ASSY RCP 2X8 BK A/6	334721869	A-BLACK	GCP	PLR		M	R	-	-	-	4	5	6	7	8	SALEABLE		N/A	N/A	N/A	N/A
								-	-	-	12	13	14	15	16						
MX150 ASSY RCP 2X8 BK A/8	334721870	A-BLACK	GCP	PLR		M	R	1	2	3	4	-	-	-	-	SALEABLE		N/A	N/A	N/A	N/A
								9	10	11	-	13	-	-	-						
MX150 ASSY RCP 2X8 BK A/3	334721871	A-BLACK	GCP	PLR		M	R	1	2	-	-	5	6	7	8	SALEABLE		N/A	N/A	N/A	N/A
								9	10	11	12	13	14	-	16						
MX150 ASSY RCP 2X8 BK A/7	334721872	A-BLACK	GCP	PLR		M	R	1	2	-	-	5	6	7	8	SALEABLE		N/A	N/A	N/A	N/A
								9	10	-	-	-	-	-	16						
MX150 ASSY RCP 2X8 BK A/7	334721873	A-BLACK	GCP	PLR		M	R	-	-	-	-	5	6	7	-	SALEABLE		N/A	N/A	N/A	N/A
								9	-	11	12	13	14	-	16						
MX150 ASSY RCP 2X8 BK A/11	334721874	A-BLACK	GCP	PLR		M	R	-	-	-	-	5	6	7	-	SALEABLE		N/A	N/A	N/A	N/A
								9	-	-	-	-	-	-	16						
MX150 ASSY RCP 2X8 BK A/7	334721875	A-BLACK	GCP	PLR		M	R	1	2	-	-	-	-	-	8	SALEABLE		N/A	N/A	N/A	N/A
								-	10	11	12	13	14	-	16						
MX150 ASSY RCP 2X8 BK A/11	334721876	A-BLACK	GCP	PLR		M	R	-	-	-	-	-	-	-	-	SALEABLE		N/A	N/A	N/A	N/A
								-	-	11	12	13	14	-	16						
MX150 ASSY RCP 2X8 BK A/11	334721877	A-BLACK	GCP	PLR		M	R	1	2	-	-	-	-	-	8	SALEABLE		N/A	N/A	N/A	N/A
								-	10	-	-	-	-	-	16						

molex

MX150 RECEPTACLE 2X8 SEALED ASSEMBLY MAT SEAL
BOM AND PIN OUT SHEET

ASSEMBLY DESCRIPTION	ASSEMBLY PART NUMBER	COMPONENT						BLOCKED TERMINALS								STATUS	COMMENT	OPTIONAL ATTACHMENTS SOLD SEPARATELY			
		THE PRESENCE OF AN ABBREVIATION INDICATES THE PRESENCE OF THAT COMPONENT						CAVITY WITH A NUMBER INDICATES BLOCKED TERMINAL POSITION CAVITY WITHOUT A NUMBER INDICATES OPEN TERMINAL POSITION													
		HOUSING KEY/COLOR	GROMMET CAP	PLR	CPA	MAT SEAL	RING SEAL											BACKSHELL WITH RIBS	BACKSHELL WITHOUT RIBS	90^0 ADAPTOR WITH RIBS	90^0 ADAPTOR WITHOUT RIBS
MX150 ASSY RCP 2X8 BK A/9	334721878	A-BLACK	GCP	PLR		M	R	-	-	3	-	5	-	7	-	SALEABLE		N/A	N/A	N/A	N/A
								-	10	11	-	13	-	15	-						
MX150 ASSY RCP 2X8 BK A/3	334721879	A-BLACK	GCP	PLR		M	R	1	2	3	4	5	-	-	8	SALEABLE		N/A	N/A	N/A	N/A
								9	10	11	12	13	14	-	16						
MX150 ASSY RCP 2X8 BK A/13	334721880	A-BLACK	GCP	PLR		M	R	-	-	-	-	-	-	-	-	SALEABLE		N/A	N/A	N/A	N/A
								-	-	-	12	13	14	-	-						
MX150 ASSY RCP 2X8 BK A/11	334721881	A-BLACK	GCP	PLR		M	R	-	2	-	-	-	-	-	-	SALEABLE		N/A	N/A	N/A	N/A
								9	-	-	12	13	14	-	-						
MX150 ASSY RCP 2X8 BK A/7	334721882	A-BLACK	GCP	PLR		M	R	1	-	-	4	5	6	-	8	SALEABLE		N/A	N/A	N/A	N/A
								-	-	-	12	13	14	-	16						
MX150 ASSY RCP 2X8 BK A/3	334721883	A-BLACK	GCP	PLR		M	R	1	2	-	4	5	6	-	8	SALEABLE		N/A	N/A	N/A	N/A
								9	10	-	12	13	14	15	16						
MX150 ASSY RCP 2X8 BK A/7	334721884	A-BLACK	GCP	PLR		M	R	-	-	-	4	5	-	-	8	SALEABLE		N/A	N/A	N/A	N/A
								-	10	11	12	13	14	15	-						
MX150 ASSY RCP 2X8 BK A/8	334721885	A-BLACK	GCP	PLR		M	R	-	-	-	-	-	-	7	8	SALEABLE		N/A	N/A	N/A	N/A
								9	10	11	12	13	14	-	-						
MX150 ASSY RCP 2X8 CPA YW A/16	334721886	A-YELLOW	GCO	PLR	CPA	M	R	-	-	-	-	-	-	-	-	SALEABLE		N/A	N/A	N/A	N/A
								-	-	-	-	-	-	-	-						
MX150 ASSY RCP 2X8 BK A/9	334721887	A-BLACK	GCP	PLR		M	R	1	-	-	4	5	-	-	-	SALEABLE		N/A	N/A	N/A	N/A
								-	-	11	-	13	14	15	-						
MX150 ASSY RCP 2X8 CPA BK A/12	334721888	A-BLACK	GCP	PLR	CPA	M	R	-	-	-	-	-	6	-	-	SALEABLE		N/A	N/A	N/A	N/A
								9	-	-	-	-	-	15	16						
MX150 ASSY RCP 2X8 BK A/14	334721889	A-BLACK	GCP	PLR		M	R	-	-	-	-	-	-	-	-	SALEABLE		N/A	N/A	N/A	N/A
								-	-	-	-	13	14	-	-						
MX150 ASSY RCP 2X8 CPA BK A/14	334721890	A-BLACK	GCP	PLR	CPA	M	R	-	-	-	-	5	-	-	8	SALEABLE		N/A	N/A	N/A	N/A
								-	-	-	-	-	-	-	-						
MX150 ASSY RCP 2X8 CPA BK A/8	334721891	A-BLACK	GCP	PLR	CPA	M	R	-	-	-	-	5	6	7	8	SALEABLE		N/A	N/A	N/A	N/A
								9	10	11	12	-	-	-	-						
MX150 ASSY RCP 2X8 BK A/7	334721894	A-BLACK	GCP	PLR		M	R	-	-	-	-	5	6	7	8	SALEABLE		N/A	N/A	N/A	N/A
								-	-	-	12	13	14	15	16						
MX150 ASSY RCP 2X8 BK A/9	334721895	A-BLACK	GCP	PLR		M	R	1	2	3	-	-	-	-	-	SALEABLE		N/A	N/A	N/A	N/A
								9	10	11	-	13	-	-	-						
MX150 ASSY RCP 2X8 BK A/13	334721896	A-BLACK	GCP	PLR		M	R	1	2	-	-	5	-	-	-	SALEABLE		N/A	N/A	N/A	N/A
								-	-	-	-	-	-	-	-						
MX150 ASSY RCP 2X8 BK A/13	334721897	A-BLACK	GCP	PLR		M	R	-	-	-	-	5	-	-	-	SALEABLE		N/A	N/A	N/A	N/A
								-	-	-	-	13	14	-	-						
MX150 ASSY RCP 2X8 BK A/11	334721898	A-BLACK	GCP	PLR		M	R	1	2	-	-	5	-	-	-	SALEABLE		N/A	N/A	N/A	N/A
								-	-	-	-	13	14	-	-						
MX150 ASSY RCP 2X8 BK A/7	334721899	A-BLACK	GCP	PLR		M	R	-	-	-	-	5	-	7	8	SALEABLE		N/A	N/A	N/A	N/A
								9	10	11	12	13	14	-	-						
MX150 ASSY RCP 2X8 BK A/5	334721900	A-BLACK	GCP	PLR		M	R	1	2	-	-	5	-	7	8	SALEABLE		N/A	N/A	N/A	N/A
								9	10	11	12	13	14	-	-						
MX150 ASSY RCP 2X8 BK A/13	334721901	A-BLACK	GCP	PLR		M	R	-	-	-	-	-	-	-	8	SALEABLE		N/A	N/A	N/A	N/A
								-	10	11	-	-	-	-	-						
MX150 ASSY RCP 2X8 BK A/15	334721902	A-BLACK	GCP	PLR		M	R	-	-	3	-	-	-	-	-	SALEABLE		N/A	N/A	N/A	N/A
								-	-	-	-	-	-	-	-						
MX150 ASSY RCP 2X8 BK A/7	334721903	A-BLACK	GCP	PLR		M	R	-	-	3	-	-	-	7	8	SALEABLE		N/A	N/A	N/A	N/A
								9	10	11	12	13	14	-	-						
MX150 ASSY RCP 2X8 BK A/11	334721904	A-BLACK	GCP	PLR		M	R	-	2	-	-	-	-	-	8	SALEABLE		N/A	N/A	N/A	N/A
								-	10	11	-	-	14	-	-						
MX150 ASSY RCP 2X8 BK A/9	334721905	A-BLACK	GCP	PLR		M	R	1	-	-	-	5	-	-	8	SALEABLE		N/A	N/A	N/A	N/A
								-	10	11	-	13	-	15	-						
MX150 ASSY RCP 2X8 BK A/11	334721906	A-BLACK	GCP	PLR		M	R	-	-	-	-	-	-	-	-	SALEABLE		N/A	N/A	N/A	N/A
								-	10	-	-	13	14	15	16						

molex

MX150 RECEPTACLE 2X8 SEALED ASSEMBLY MAT SEAL
BOM AND PIN OUT SHEET

ASSEMBLY DESCRIPTION	ASSEMBLY PART NUMBER	COMPONENT						BLOCKED TERMINALS								STATUS	COMMENT	OPTIONAL ATTACHMENTS SOLD SEPARATELY			
		THE PRESENCE OF AN ABBREVIATION INDICATES THE PRESENCE OF THAT COMPONENT						CAVITY WITH A NUMBER INDICATES BLOCKED TERMINAL POSITION CAVITY WITHOUT A NUMBER INDICATES OPEN TERMINAL POSITION													
		HOUSING KEY/COLOR	GROMMET CAP	PLR	CPA	MAT SEAL	RING SEAL											BACKSHELL WITH RIBS	BACKSHELL WITHOUT RIBS	90^0 ADAPTOR WITH RIBS	90^0 ADAPTOR WITHOUT RIBS
MX150 ASSY RCP 2X8 BK A/8	334721907	A-BLACK	GCP	PLR		M	R	1	-	-	4	5	6	-	8	SALEABLE		N/A	N/A	N/A	N/A
								-	-	-	12	13	14	-	-						
MX150 ASSY RCP 2X8 CPA BK A/12	334721908	A-BLACK	GCP	PLR	CPA	M	R	-	-	-	-	-	-	-	-	SALEABLE		N/A	N/A	N/A	N/A
								-	-	11	12	13	14	-	-						
MX150 ASSY RCP 2X8 CPA BK A/10	334721909	A-BLACK	GCP	PLR	CPA	M	R	1	-	3	-	5	6	-	-	SALEABLE		N/A	N/A	N/A	N/A
								-	-	-	12	13	-	-	-						
MX150 ASSY RCP 2X8 CPA BK A/12	334721910	A-BLACK	GCP	PLR	CPA	M	R	-	-	-	-	-	-	7	8	SALEABLE		N/A	N/A	N/A	N/A
								9	-	-	-	-	-	-	16						
MX150 ASSY RCP 2X8 BK A/5	334721911	A-BLACK	GCP	PLR		M	R	-	-	3	-	-	-	7	8	SALEABLE		N/A	N/A	N/A	N/A
								9	10	11	12	13	14	15	16						
MX150 ASSY RCP 2X8 BK A/13	334721912	A-BLACK	GCP	PLR		M	R	-	-	3	-	-	-	-	-	SALEABLE		N/A	N/A	N/A	N/A
								-	-	-	-	-	-	15	16						
MX150 ASSY RCP 2X8 BK A/7	334721913	A-BLACK	GCP	PLR		M	R	-	-	-	-	-	-	7	8	SALEABLE		N/A	N/A	N/A	N/A
								9	10	11	12	13	14	-	16						
MX150 ASSY RCP 2X8 BK A/13	334721914	A-BLACK	GCP	PLR		M	R	-	-	-	-	-	-	-	-	SALEABLE		N/A	N/A	N/A	N/A
								-	-	-	-	13	14	-	16						
MX150 ASSY RCP 2X8 CPA BK A/0	334721915	A-BLACK	GCP	PLR	CPA	M	R	1	2	3	4	5	6	7	8	SALEABLE		N/A	N/A	N/A	N/A
								9	10	11	12	13	14	15	16						
MX150 ASSY RCP 2X8 BK A/11	334721916	A-BLACK	GCP	PLR		M	R	1	-	-	-	5	-	-	-	SALEABLE		N/A	N/A	N/A	N/A
								-	-	11	-	13	-	15	-						
MX150 ASSY RCP 2X8 BK A/15	334721917	A-BLACK	GCP	PLR		M	R	-	-	-	-	-	-	-	-	SALEABLE		N/A	N/A	N/A	N/A
								-	10	-	-	-	-	-	-						
MX150 ASSY RCP 2X8 BK A/15	334721918	A-BLACK	GCP	PLR		M	R	-	-	-	-	-	-	-	-	SALEABLE		N/A	N/A	N/A	N/A
								-	-	-	-	-	14	-	-						
MX150 ASSY RCP 2X8 CPA BK A/10	334721919	A-BLACK	GCP	PLR	CPA	M	R	1	2	-	-	5	-	-	8	SALEABLE		N/A	N/A	N/A	N/A
								-	-	-	-	-	14	15	-						
MX150 ASSY RCP 2X8 CPA BK A/4	334721920	A-BLACK	GCP	PLR	CPA	M	R	1	2	-	-	5	6	7	8	SALEABLE		N/A	N/A	N/A	N/A
								9	10	11	12	-	14	15	-						
MX150 ASSY RCP 2X8 BK A/13	334721921	A-BLACK	GCP	PLR		M	R	-	-	3	-	-	-	-	-	SALEABLE		N/A	N/A	N/A	N/A
								-	-	-	-	13	14	-	-						
MX150 ASSY RCP 2X8 BK A/3	334721922	A-BLACK	GCP	PLR		M	R	1	2	3	4	5	6	7	8	SALEABLE		N/A	N/A	N/A	N/A
								9	-	-	12	13	-	15	16						
MX150 ASSY RCP 2X8 BK A/7	334721923	A-BLACK	GCP	PLR		M	R	1	2	-	4	5	-	7	8	SALEABLE		N/A	N/A	N/A	N/A
								9	-	-	-	-	-	15	16						
MX150 ASSY RCP 2X8 BK A/14	334721924	A-BLACK	GCP	PLR		M	R	-	-	-	-	-	-	-	8	SALEABLE		N/A	N/A	N/A	N/A
								-	-	-	-	-	-	-	16						
MX150 ASSY RCP 2X8 BK A/14	334721925	A-BLACK	GCP	PLR		M	R	-	-	3	-	-	6	-	-	SALEABLE		N/A	N/A	N/A	N/A
								-	-	-	-	-	-	-	-						
MX150 ASSY RCP 2X8 BK A/12	334721926	A-BLACK	GCP	PLR		M	R	-	-	3	-	-	6	-	-	SALEABLE		N/A	N/A	N/A	N/A
								-	-	-	-	13	14	-	-						
MX150 ASSY RCP 2X8 BK A/8	334721927	A-BLACK	GCP	PLR		M	R	-	-	3	4	5	6	7	-	SALEABLE		N/A	N/A	N/A	N/A
								9	-	-	-	-	-	15	16						
MX150 ASSY RCP 2X8 BK A/10	334721928	A-BLACK	GCP	PLR		M	R	-	-	-	-	-	6	7	8	SALEABLE		N/A	N/A	N/A	N/A
								-	-	-	-	-	14	15	16						
MX150 ASSY RCP 2X8 BK A/8	334721929	A-BLACK	GCP	PLR		M	R	-	-	-	-	-	6	7	8	SALEABLE		N/A	N/A	N/A	N/A
								-	-	-	12	13	14	15	16						
MX150 ASSY RCP 2X8 BK A/6	334721930	A-BLACK	GCP	PLR		M	R	1	2	3	4	5	-	-	-	SALEABLE		N/A	N/A	N/A	N/A
								9	10	11	12	13	-	-	-						
MX150 ASSY RCP 2X8 BK A/14	334721931	A-BLACK	GCP	PLR		M	R	1	-	-	-	-	-	-	-	SALEABLE		N/A	N/A	N/A	N/A
								-	-	-	-	-	14	-	-						
MX150 ASSY RCP 2X8 BK A/9	334721932	A-BLACK	GCP	PLR		M	R	1	2	-	4	5	6	-	-	SALEABLE		N/A	N/A	N/A	N/A
								-	10	-	-	-	14	-	-						
MX150 ASSY RCP 2X8 BK A/11	334721933	A-BLACK	GCP	PLR		M	R	-	-	-	-	-	-	-	8	SALEABLE		N/A	N/A	N/A	N/A
								-	10	11	-	13	-	15	-						

molex

MX150 RECEPTACLE 2X8 SEALED ASSEMBLY MAT SEAL
BOM AND PIN OUT SHEET

ASSEMBLY DESCRIPTION	ASSEMBLY PART NUMBER	COMPONENT						BLOCKED TERMINALS								STATUS	COMMENT	OPTIONAL ATTACHMENTS SOLD SEPARATELY			
		THE PRESENCE OF AN ABBREVIATION INDICATES THE PRESENCE OF THAT COMPONENT						CAVITY WITH A NUMBER INDICATES BLOCKED TERMINAL POSITION CAVITY WITHOUT A NUMBER INDICATES OPEN TERMINAL POSITION													
		HOUSING KEY/COLOR	GROMMET CAP	PLR	CPA	MAT SEAL	RING SEAL											BACKSHELL WITH RIBS	BACKSHELL WITHOUT RIBS	90^0 ADAPTOR WITH RIBS	90^0 ADAPTOR WITHOUT RIBS
MX150 ASSY RCP 2X8 BK A/10	334721934	A-BLACK	GCP	PLR		M	R	-	2	-	-	5	-	-	8	SALEABLE		N/A	N/A	N/A	N/A
								-	10	11	-	-	14	-	-						
MX150 ASSY RCP 2X8 BK A/8	334721935	A-BLACK	GCP	PLR		M	R	-	2	-	-	5	-	-	8	SALEABLE		N/A	N/A	N/A	N/A
								-	10	11	-	13	14	15	-						
MX150 ASSY RCP 2X8 CPA BK A/9	334721936	A-BLACK	GCP	PLR	CPA	M	R	-	2	-	4	-	6	-	-	SALEABLE		N/A	N/A	N/A	N/A
								-	10	-	12	-	14	15	-						
MX150 ASSY RCP 2X8 CPA LG B/9	334721937	B-LIGHT GRAY	GCP	PLR	CPA	M	R	-	2	-	4	-	6	-	-	SALEABLE		N/A	N/A	N/A	N/A
								-	10	-	12	-	14	15	-						
MX150 ASSY RCP 2X8 CPA BK A/11	334721938	A-BLACK	GCP	PLR	CPA	M	R	-	-	-	-	5	6	7	-	SALEABLE		N/A	N/A	N/A	N/A
								-	10	-	-	13	-	-	-						
MX150 ASSY RCP 2X8 CPA BK A/9	334721939	A-BLACK	GCP	PLR	CPA	M	R	1	2	3	-	5	6	-	-	SALEABLE		N/A	N/A	N/A	N/A
								-	-	-	12	13	-	-	-						
MX150 ASSY RCP 2X8 CPA BK A/14	334721940	A-BLACK	GCP	PLR	CPA	M	R	-	-	-	-	-	-	7	-	SALEABLE		N/A	N/A	N/A	N/A
								-	10	-	-	-	-	-	-						
MX150 ASSY RCP 2X8 CPA BK A/8	334721941	A-BLACK	GCP	PLR	CPA	M	R	-	-	-	4	5	6	7	-	SALEABLE		N/A	N/A	N/A	N/A
								-	10	-	-	-	14	15	16						
MX150 ASSY RCP 2X8 BK A/14	334721942	A-BLACK	GCP	PLR		M	R	-	-	-	-	-	-	-	-	SALEABLE		N/A	N/A	N/A	N/A
								-	-	-	12	13	-	-	-						
MX150 ASSY RCP 2X8 BK A/11	334721943	A-BLACK	GCP	PLR		M	R	-	-	-	-	-	-	-	8	SALEABLE		N/A	N/A	N/A	N/A
								-	-	11	12	13	-	-	16						
MX150 ASSY RCP 2X8 BK A/13	334721944	A-BLACK	GCP	PLR		M	R	-	-	-	-	-	-	-	8	SALEABLE		N/A	N/A	N/A	N/A
								-	-	-	-	13	-	-	16						
MX150 ASSY RCP 2X8 BK A/9	334721945	A-BLACK	GCP	PLR		M	R	-	-	-	4	5	-	-	8	SALEABLE		N/A	N/A	N/A	N/A
								-	10	11	-	13	14	-	-						
MX150 ASSY RCP 2X8 BK A/13	334721946	A-BLACK	GCP	PLR		M	R	1	-	-	-	-	-	-	-	SALEABLE		N/A	N/A	N/A	N/A
								-	-	-	12	-	14	-	-						
MX150 ASSY RCP 2X8 BK A/11	334721947	A-BLACK	GCP	PLR		M	R	-	-	-	-	5	-	-	8	SALEABLE		N/A	N/A	N/A	N/A
								-	10	11	-	13	-	-	-						
MX150 ASSY RCP 2X8 BK A/10	334721948	A-BLACK	GCP	PLR		M	R	-	-	-	4	-	-	-	8	SALEABLE		N/A	N/A	N/A	N/A
								-	-	-	-	13	14	15	16						
MX150 ASSY RCP 2X8 CPA BK A/8	334721949	A-BLACK	GCP	PLR	CPA	M	R	-	-	-	-	-	6	7	8	SALEABLE		N/A	N/A	N/A	N/A
								-	-	11	12	13	14	15	-						
MX150 ASSY RCP 2X8 BK A/12	334721950	A-BLACK	GCP	PLR		M	R	-	-	-	-	5	6	7	8	SALEABLE		N/A	N/A	N/A	N/A
								-	-	-	-	-	-	-	-						
MX150 ASSY RCP 2X8 CPA BK A/11	334721951	A-BLACK	GCP	PLR	CPA	M	R	-	-	-	-	-	-	-	-	SALEABLE		N/A	N/A	N/A	N/A
								-	-	11	12	-	14	15	16						
MX150 ASSY RCP 2X8 BK A/7	334721952	A-BLACK	GCP	PLR		M	R	-	-	-	-	5	6	7	8	SALEABLE		N/A	N/A	N/A	N/A
								-	-	11	12	13	14	15	-						
MX150 ASSY RCP 2X8 CPA BK A/7	334721953	A-BLACK	GCP	PLR	CPA	M	R	-	-	-	-	-	6	7	8	SALEABLE		N/A	N/A	N/A	N/A
								-	10	11	12	13	14	15	-						
MX150 ASSY RCP 2X8 CPA BK A/7	334721954	A-BLACK	GCP	PLR	CPA	M	R	-	-	-	-	5	6	7	8	SALEABLE		N/A	N/A	N/A	N/A
								-	-	11	12	13	14	15	-						
MX150 ASSY RCP 2X8 CPA BK A/12	334721955	A-BLACK	GCP	PLR	CPA	M	R	-	-	-	-	5	6	7	8	SALEABLE		N/A	N/A	N/A	N/A
								-	-	-	-	-	-	-	-						
MX150 ASSY RCP 2X8 LG B/15	334721956	B-LIGHT GRAY	GCP	PLR		M	R	-	-	3	-	-	-	-	-	SALEABLE		N/A	N/A	N/A	N/A
								-	-	-	-	-	-	-	-						
MX150 ASSY RCP 2X8 BK A/3	334721957	A-BLACK	GCP	PLR		M	R	1	2	3	4	5	6	7	8	SALEABLE		N/A	N/A	N/A	N/A
								-	-	-	12	13	14	15	16						
MX150 ASSY RCP 2X8 BK A/11	334721958	A-BLACK	GCP	PLR		M	R	-	-	-	-	-	-	7	8	SALEABLE		N/A	N/A	N/A	N/A
								-	-	-	-	-	14	15	16						
MX150 ASSY RCP 2X8 BK A/11	334721959	A-BLACK	GCP	PLR		M	R	-	-	-	-	-	-	-	-	SALEABLE		N/A	N/A	N/A	N/A
								-	10	11	12	13	14	-	-						
MX150 ASSY RCP 2X8 BK A/9	334721960	A-BLACK	GCP	PLR		M	R	-	-	-	4	-	6	-	8	SALEABLE		N/A	N/A	N/A	N/A
								-	-	-	-	13	14	15	16						

molex

MX150 RECEPTACLE 2X8 SEALED ASSEMBLY MAT SEAL
BOM AND PIN OUT SHEET

ASSEMBLY DESCRIPTION	ASSEMBLY PART NUMBER	COMPONENT THE PRESENCE OF AN ABBREVIATION INDICATES THE PRESENCE OF THAT COMPONENT						BLOCKED TERMINALS CAVITY WITH A NUMBER INDICATES BLOCKED TERMINAL POSITION CAVITY WITHOUT A NUMBER INDICATES OPEN TERMINAL POSITION								STATUS	COMMENT	OPTIONAL ATTACHMENTS SOLD SEPARATELY			
		HOUSING KEY/COLOR	GROMMET CAP	PLR	CPA	MAT SEAL	RING SEAL											BACKSHELL WITH RIBS	BACKSHELL WITHOUT RIBS	90^0 ADAPTOR WITH RIBS	90^0 ADAPTOR WITHOUT RIBS
MX150 ASSY RCP 2X8 BK A/6	334721961	A-BLACK	GCP	PLR		M	R	-	-	3	-	-	6	7	8	SALEABLE		N/A	N/A	N/A	N/A
								9	10	11	12	13	14	-	-						
MX150 ASSY RCP 2X8 LG B/15	334721962	B-LIGHT GRAY	GCP	PLR		M	R	-	-	-	-	-	-	-	-	SALEABLE		N/A	N/A	N/A	N/A
								-	-	-	-	13	-	-	-						
MX150 ASSY RCP 2X8 BK A/10	334721963	A-BLACK	GCP	PLR		M	R	-	-	-	-	5	-	7	8	SALEABLE		N/A	N/A	N/A	N/A
								-	-	11	-	13	-	15	-						
MX150 ASSY RCP 2X8 BK A/15	334721964	A-BLACK	GCP	PLR		M	R	-	-	-	-	-	-	-	-	SALEABLE		N/A	N/A	N/A	N/A
								-	-	-	-	13	-	-	-						
MX150 ASSY RCP 2X8 CPA BK A/11	334721965	A-BLACK	GCP	PLR	CPA	M	R	-	-	-	-	5	6	-	-	SALEABLE		N/A	N/A	N/A	N/A
								-	-	-	12	13	-	15	-						
MX150 ASSY RCP 2X8 CPA BK A/11	334721966	A-BLACK	GCP	PLR	CPA	M	R	-	-	-	-	-	6	7	8	SALEABLE		N/A	N/A	N/A	N/A
								-	10	11	-	-	-	-	-						
MX150 ASSY RCP 2X8 CPA BK A/13	334721967	A-BLACK	GCP	PLR	CPA	M	R	-	-	-	-	-	6	7	8	SALEABLE		N/A	N/A	N/A	N/A
								-	-	-	-	-	-	-	-						
MX150 ASSY RCP 2X8 BK A/8	334721968	A-BLACK	GCP	PLR		M	R	1	2	-	-	-	-	-	8	SALEABLE		N/A	N/A	N/A	N/A
								9	-	11	-	13	-	15	16						
MX150 ASSY RCP 2X8 CPA BK A/11	334721969	A-BLACK	GCP	PLR	CPA	M	R	-	-	-	-	-	-	-	-	SALEABLE		N/A	N/A	N/A	N/A
								-	-	11	12	13	14	15	-						
MX150 ASSY RCP 2X8 BK A/9	334721970	A-BLACK	GCP	PLR		M	R	-	-	-	4	5	-	-	8	SALEABLE		N/A	N/A	N/A	N/A
								-	-	-	-	13	14	15	16						
MX150 ASSY RCP 2X8 BK A/8	334721971	A-BLACK	GCP	PLR		M	R	1	2	3	4	5	6	7	8	SALEABLE		N/A	N/A	N/A	N/A
								-	-	-	-	-	-	-	-						
MX150 ASSY RCP 2X8 BK A/10	334721972	A-BLACK	GCP	PLR		M	R	-	2	-	-	-	-	-	8	SALEABLE		N/A	N/A	N/A	N/A
								-	10	11	-	-	-	15	16						
MX150 ASSY RCP 2X8 BK A/4	334721973	A-BLACK	GCP	PLR		M	R	1	2	3	4	5	6	7	8	SALEABLE		N/A	N/A	N/A	N/A
								9	-	-	12	13	14	-	-						
MX150 ASSY RCP 2X8 BK A/10	334721974	A-BLACK	GCP	PLR		M	R	-	2	-	-	-	-	-	8	SALEABLE		N/A	N/A	N/A	N/A
								9	-	-	12	13	14	-	-						
MX150 ASSY RCP 2X8 BK A/12	334721975	A-BLACK	GCP	PLR		M	R	-	-	-	-	-	-	-	-	SALEABLE		N/A	N/A	N/A	N/A
								9	-	-	12	13	14	-	-						
MX150 ASSY RCP 2X8 BK A/6	334721976	A-BLACK	GCP	PLR		M	R	-	2	-	-	-	-	-	8	SALEABLE		N/A	N/A	N/A	N/A
								9	10	11	12	13	14	15	16						
MX150 ASSY RCP 2X8 BK A/15	334721977	A-BLACK	GCP	PLR		M	R	-	-	-	-	-	-	-	-	SALEABLE		N/A	N/A	N/A	N/A
								9	-	-	-	-	-	-	-						
MX150 ASSY RCP 2X8 BK A/15	334721978	A-BLACK	GCP	PLR		M	R	-	-	-	-	-	-	-	-	SALEABLE		N/A	N/A	N/A	N/A
								-	-	-	-	-	-	15	-						
MX150 ASSY RCP 2X8 BK A/13	334721979	A-BLACK	GCP	PLR		M	R	-	-	-	-	-	-	-	-	SALEABLE		N/A	N/A	N/A	N/A
								-	-	11	12	-	-	15	-						
MX150 ASSY RCP 2X8 BK A/5	334721980	A-BLACK	GCP	PLR		M	R	1	-	-	4	-	6	7	8	SALEABLE		N/A	N/A	N/A	N/A
								-	10	11	12	13	14	15	-						
MX150 ASSY RCP 2X8 BK A/12	334721981	A-BLACK	GCP	PLR		M	R	-	-	3	4	5	-	-	-	SALEABLE		N/A	N/A	N/A	N/A
								-	10	-	-	-	-	-	-						
MX150 ASSY RCP 2X8 BK A/13	334721982	A-BLACK	GCP	PLR		M	R	-	-	-	-	-	-	-	-	SALEABLE		N/A	N/A	N/A	N/A
								-	10	11	-	-	-	15	-						
MX150 ASSY RCP 2X8 BK A/11	334721983	A-BLACK	GCP	PLR		M	R	1	-	-	-	-	-	-	8	SALEABLE		N/A	N/A	N/A	N/A
								-	10	11	-	-	-	15	-						
MX150 ASSY RCP 2X8 BK A/5	334721984	A-BLACK	GCP	PLR		M	R	1	2	3	4	5	6	7	8	SALEABLE		N/A	N/A	N/A	N/A
								-	10	11	-	-	-	15	-						
MX150 ASSY RCP 2X8 BK A/9	334721985	A-BLACK	GCP	PLR		M	R	1	-	-	-	-	-	-	8	SALEABLE		N/A	N/A	N/A	N/A
								9	10	11	-	-	-	15	16						
MX150 ASSY RCP 2X8 BK A/11	334721986	A-BLACK	GCP	PLR		M	R	-	-	-	-	-	-	-	-	SALEABLE		N/A	N/A	N/A	N/A
								9	10	11	-	-	-	15	16						
MX150 ASSY RCP 2X8 BK A/4	334721987	A-BLACK	GCP	PLR		M	R	1	2	3	-	5	6	7	-	SALEABLE		N/A	N/A	N/A	N/A
								9	-	11	-	13	14	15	16						

molex

MX150 RECEPTACLE 2X8 SEALED ASSEMBLY MAT SEAL
BOM AND PIN OUT SHEET

ASSEMBLY DESCRIPTION	ASSEMBLY PART NUMBER	COMPONENT						BLOCKED TERMINALS								STATUS	COMMENT	OPTIONAL ATTACHMENTS SOLD SEPARATELY			
		THE PRESENCE OF AN ABBREVIATION INDICATES THE PRESENCE OF THAT COMPONENT						CAVITY WITH A NUMBER INDICATES BLOCKED TERMINAL POSITION CAVITY WITHOUT A NUMBER INDICATES OPEN TERMINAL POSITION													
		HOUSING KEY/COLOR	GROMMET CAP	PLR	CPA	MAT SEAL	RING SEAL											BACKSHELL WITH RIBS	BACKSHELL WITHOUT RIBS	90^0 ADAPTOR WITH RIBS	90^0 ADAPTOR WITHOUT RIBS
MX150 ASSY RCP 2X8 BK A/6	334721988	A-BLACK	GCP	PLR		M	R	-	2	-	-	-	6	7	-	SALEABLE		N/A	N/A	N/A	N/A
								9	10	11	-	13	14	15	16						
MX150 ASSY RCP 2X8 BK A/14	334721989	A-BLACK	GCP	PLR		M	R	-	-	-	-	-	-	-	-	SALEABLE		N/A	N/A	N/A	N/A
								-	-	-	-	13	-	-	16						
MX150 ASSY RCP 2X8 BK A/12	334721990	A-BLACK	GCP	PLR		M	R	-	-	-	-	-	-	-	-	SALEABLE		N/A	N/A	N/A	N/A
								-	-	11	12	13	-	-	16						
MX150 ASSY RCP 2X8 BK A/15	334721991	A-BLACK	GCP	PLR		M	R	1	-	-	-	-	-	-	-	SALEABLE		N/A	N/A	N/A	N/A
								-	-	-	-	-	-	-	-						
MX150 ASSY RCP 2X8 BK A/11	334721992	A-BLACK	GCP	PLR		M	R	-	-	-	-	-	6	-	-	SALEABLE		N/A	N/A	N/A	N/A
								-	-	11	12	13	14	-	-						
MX150 ASSY RCP 2X8 BK A/9	334721993	A-BLACK	GCP	PLR		M	R	-	-	3	4	5	6	7	-	SALEABLE		N/A	N/A	N/A	N/A
								9	-	-	-	-	-	-	16						
MX150 ASSY RCP 2X8 BK A/6	334721994	A-BLACK	GCP	PLR		M	R	-	2	-	4	5	6	-	-	SALEABLE		N/A	N/A	N/A	N/A
								9	10	-	12	13	14	-	16						
MX150 ASSY RCP 2X8 BK A/5	334721995	A-BLACK	GCP	PLR		M	R	-	2	-	4	5	6	7	-	SALEABLE		N/A	N/A	N/A	N/A
								9	10	-	12	13	14	-	16						
MX150 ASSY RCP 2X8 BK A/6	334721996	A-BLACK	GCP	PLR		M	R	1	2	-	-	-	6	7	8	SALEABLE		N/A	N/A	N/A	N/A
								9	10	-	-	-	14	15	16						
MX150 ASSY RCP 2X8 BK A/8	334721997	A-BLACK	GCP	PLR		M	R	1	2	-	-	-	-	7	8	SALEABLE		N/A	N/A	N/A	N/A
								9	10	-	-	-	-	15	16						
MX150 ASSY RCP 2X8 BK A/4	334721998	A-BLACK	GCP	PLR		M	R	-	-	3	4	5	6	7	8	SALEABLE		N/A	N/A	N/A	N/A
								-	-	11	12	13	14	15	16						
MX150 ASSY RCP 2X8 BK A/12	334721999	A-BLACK	GCP	PLR		M	R	-	-	-	-	-	-	7	8	SALEABLE		N/A	N/A	N/A	N/A
								-	-	-	-	-	-	15	16						
MX150 ASSY RCP 2X8 CS BK A/16	334723001	A-BLACK-CLIP	GCO	PLR		M	R	-	-	-	-	-	-	-	-	SALEABLE		34951-1611	34951-1621	34951-1631	34951-1641
								-	-	-	-	-	-	-	-						
MX150 ASSY RCP 2X8 CS LG B/16	334723002	B-LIGHT GRAY-CLIP	GCO	PLR		M	R	-	-	-	-	-	-	-	-	SALEABLE		34951-1611	34951-1621	34951-1631	34951-1641
								-	-	-	-	-	-	-	-						
MX150 ASSY RCP 2X8 CS DG C/16	334723003	C-DARK GRAY-CLIP	GCO	PLR		M	R	-	-	-	-	-	-	-	-	SALEABLE		34951-1611	34951-1621	34951-1631	34951-1641
								-	-	-	-	-	-	-	-						
MX150 ASSY RCP 2X8 CS SG D/16	334723004	D-STONE GRAY-CLIP	GCO	PLR		M	R	-	-	-	-	-	-	-	-	SALEABLE		34951-1611	34951-1621	34951-1631	34951-1641
								-	-	-	-	-	-	-	-						
MX150 ASSY RCP 2X8 CS CPA BK A/16	334723005	A-BLACK-CLIP	GCO	PLR	CPA	M	R	-	-	-	-	-	-	-	-	SALEABLE		34951-1611	34951-1621	34951-1631	34951-1641
								-	-	-	-	-	-	-	-						
MX150 ASSY RCP 2X8 CS CPA LG B/16	334723006	B-LIGHT GRAY-CLIP	GCO	PLR	CPA	M	R	-	-	-	-	-	-	-	-	SALEABLE		34951-1611	34951-1621	34951-1631	34951-1641
								-	-	-	-	-	-	-	-						
MX150 ASSY RCP 2X8 CS CPA DG C/16	334723007	C-DARK GRAY-CLIP	GCO	PLR	CPA	M	R	-	-	-	-	-	-	-	-	SALEABLE		34951-1611	34951-1621	34951-1631	34951-1641
								-	-	-	-	-	-	-	-						
MX150 ASSY RCP 2X8 CS CPA SG D/16	334723008	D-STONE GRAY-CLIP	GCO	PLR	CPA	M	R	-	-	-	-	-	-	-	-	SALEABLE		34951-1611	34951-1621	34951-1631	34951-1641
								-	-	-	-	-	-	-	-						
MX150 ASSY RCP 2X8 CS BK A/13	334723009	A-BLACK-CLIP	GCP	PLR		M	R	-	-	-	-	-	-	-	-	SALEABLE		34951-1611	34951-1621	34951-1631	34951-1641
								-	-	-	-	-	14	15	16						
MX150 ASSY RCP 2X8 CS BK A/9	334723010	A-BLACK-CLIP	GCP	PLR		M	R	-	-	3	4	-	-	7	8	SALEABLE		34951-1611	34951-1621	34951-1631	34951-1641
								9	-	-	-	-	-	15	16						
MX150 ASSY RCP 2X8 CS CPA BK A/11	334723011	A-BLACK-CLIP	GCP	PLR	CPA	M	R	-	-	3	4	-	-	-	-	SALEABLE		34951-1611	34951-1621	34951-1631	34951-1641
								-	-	-	-	-	14	15	16						
MX150 ASSY RCP 2X8 CS BK A/10	334723012	A-BLACK-CLIP	GCP	PLR		M	R	1	-	-	-	5	-	-	8	SALEABLE		34951-1611	34951-1621	34951-1631	34951-1641
								9	10	-	-	-	-	-	16						
MX150 ASSY RCP 2X8 CS CPA BK A/12	334723013	A-BLACK-CLIP	GCP	PLR	CPA	M	R	-	-	3	-	-	-	-	-	SALEABLE		34951-1611	34951-1621	34951-1631	34951-1641
								-	-	-	-	-	14	15	16						
MX150 ASSY RCP 2X8 CS CPA DG C/15	334723014	C-DARK GRAY-CLIP	GCP	PLR	CPA	M	R	1	-	-	-	-	-	-	-	SALEABLE		34951-1611	34951-1621	34951-1631	34951-1641
								-	-	-	-	-	-	-	-						
MX150 ASSY RCP 2X8 CS SG D/15	334723015	D-STONE GRAY-CLIP	GCP	PLR		M	R	1	-	-	-	-	-	-	-	SALEABLE		34951-1611	34951-1621	34951-1631	34951-1641
								-	-	-	-	-	-	-	-						

molex

MX150 RECEPTACLE 2X8 SEALED ASSEMBLY MAT SEAL
BOM AND PIN OUT SHEET

ASSEMBLY DESCRIPTION	ASSEMBLY PART NUMBER	COMPONENT						BLOCKED TERMINALS								STATUS	COMMENT	OPTIONAL ATTACHMENTS SOLD SEPARATELY			
		THE PRESENCE OF AN ABBREVIATION INDICATES THE PRESENCE OF THAT COMPONENT						CAVITY WITH A NUMBER INDICATES BLOCKED TERMINAL POSITION CAVITY WITHOUT A NUMBER INDICATES OPEN TERMINAL POSITION													
		HOUSING KEY/COLOR	GROMMET CAP	PLR	CPA	MAT SEAL	RING SEAL											BACKSHELL WITH RIBS	BACKSHELL WITHOUT RIBS	90^0 ADAPTOR WITH RIBS	90^0 ADAPTOR WITHOUT RIBS
MX150 ASSY RCP 2X8 CS DG C/15	334723016	C-DARK GRAY-CLIP	GCP	PLR		M	R	1	-	-	-	-	-	-	-	SALEABLE		34951-1611	34951-1621	34951-1631	34951-1641
								-	-	-	-	-	-	-	-						
MX150 ASSY RCP 2X8 CS CPA SG D/15	334723019	D-STONE GRAY-CLIP	GCP	PLR	CPA	M	R	1	-	-	-	-	-	-	-	SALEABLE		34951-1611	34951-1621	34951-1631	34951-1641
								-	-	-	-	-	-	-	-						
MX150 ASSY RCP 2X8 CS BK A/15	334723020	A-BLACK-CLIP	GCP	PLR		M	R	-	-	-	-	-	-	-	-	SALEABLE		34951-1611	34951-1621	34951-1631	34951-1641
								-	-	-	-	-	-	-	16						
MX150 ASSY RCP 2X8 CS LG B/6	334723021	B-LIGHT GRAY-CLIP	GCP	PLR		M	R	1	2	-	4	5	6	7	-	SALEABLE		34951-1611	34951-1621	34951-1631	34951-1641
								-	-	11	-	-	14	15	16						
MX150 ASSY RCP 2X8 CS BK A/7	334723022	A-BLACK-CLIP	GCP	PLR		M	R	-	-	3	-	-	6	7	8	SALEABLE		34951-1611	34951-1621	34951-1631	34951-1641
								-	10	11	-	-	14	15	16						
MX150 ASSY RCP 2X8 CS BK A/13	334723023	A-BLACK-CLIP	GCP	PLR		M	R	-	-	-	-	-	-	-	8	SALEABLE		34951-1611	34951-1621	34951-1631	34951-1641
								-	10	-	12	-	-	-	-						
MX150 ASSY RCP 2X8 CS LG B/7	334723024	B-LIGHT GRAY-CLIP	GCP	PLR		M	R	-	2	-	4	5	6	7	-	SALEABLE		34951-1611	34951-1621	34951-1631	34951-1641
								-	-	11	-	-	14	15	16						
MX150 ASSY RCP 2X8 CS BK A/13	334723025	A-BLACK-CLIP	GCP	PLR		M	R	-	-	-	-	-	6	-	-	SALEABLE		34951-1611	34951-1621	34951-1631	34951-1641
								-	10	-	-	-	-	15	-						
MX150 ASSY RCP 2X8 CS LG B/4	334723026	B-LIGHT GRAY-CLIP	GCP	PLR		M	R	1	2	-	4	5	6	7	-	SALEABLE		34951-1611	34951-1621	34951-1631	34951-1641
								9	10	11	-	-	14	15	16						
MX150 ASSY RCP 2X8 CS LG B/10	334723028	B-LIGHT GRAY-CLIP	GCP	PLR		M	R	-	2	-	4	5	6	-	-	SALEABLE		34951-1611	34951-1621	34951-1631	34951-1641
								-	-	-	12	13	-	-	-						
MX150 ASSY RCP 2X8 CS LG B/14	334723029	B-LIGHT GRAY-CLIP	GCP	PLR		M	R	-	-	-	-	-	-	-	-	SALEABLE		34951-1611	34951-1621	34951-1631	34951-1641
								-	-	-	12	13	-	-	-						
MX150 ASSY RCP 2X8 CS CPA BK A/11	334723031	A-BLACK-CLIP	GCP	PLR	CPA	M	R	-	-	3	-	-	-	-	-	SALEABLE		34951-1611	34951-1621	34951-1631	34951-1641
								-	-	-	-	13	14	15	16						
MX150 ASSY RCP 2X8 CS CPA BK A/13	334723032	A-BLACK-CLIP	GCP	PLR	CPA	M	R	-	-	-	-	-	-	-	-	SALEABLE		34951-1611	34951-1621	34951-1631	34951-1641
								-	-	-	-	-	14	15	16						
MX150 ASSY RCP 2X8 CS BK A/15	334723033	A-BLACK-CLIP	GCP	PLR		M	R	-	-	-	-	5	-	-	-	SALEABLE		34951-1611	34951-1621	34951-1631	34951-1641
								-	-	-	-	-	-	-	-						
MX150 ASSY RCP 2X8 CS BK A/10	334723034	A-BLACK-CLIP	GCP	PLR		M	R	1	2	3	-	-	-	-	8	SALEABLE		34951-1611	34951-1621	34951-1631	34951-1641
								9	-	-	-	-	-	-	16						
MX150 ASSY RCP 2X8 CS BK A/9	334723035	A-BLACK-CLIP	GCP	PLR		M	R	-	-	-	4	5	6	-	8	SALEABLE		34951-1611	34951-1621	34951-1631	34951-1641
								-	-	11	-	13	-	15	-						
MX150 ASSY RCP 2X8 CS BK A/12	334723036	A-BLACK-CLIP	GCP	PLR		M	R	-	2	3	-	-	-	7	8	SALEABLE		34951-1611	34951-1621	34951-1631	34951-1641
								-	-	-	-	-	-	-	-						
MX150 ASSY RCP 2X8 CS CPA BK A/13	334723037	A-BLACK-CLIP	GCP	PLR	CPA	M	R	-	-	-	-	-	-	7	-	SALEABLE		34951-1611	34951-1621	34951-1631	34951-1641
								-	-	-	-	13	-	15	-						
MX150 ASSY RCP 2X8 CS CPA LG B/11	334723038	B-LIGHT GRAY-CLIP	GCP	PLR	CPA	M	R	-	-	-	-	-	6	7	8	SALEABLE		34951-1611	34951-1621	34951-1631	34951-1641
								-	-	11	-	13	-	-	-						
MX150 ASSY RCP 2X8 CS CPA BK A/9	334723039	A-BLACK-CLIP	GCP	PLR	CPA	M	R	-	-	-	-	-	6	-	8	SALEABLE		34951-1611	34951-1621	34951-1631	34951-1641
								9	10	11	12	-	-	-	16						
MX150 ASSY RCP 2X8 CS CPA BK A/14	334723040	A-BLACK-CLIP	GCP	PLR	CPA	M	R	-	-	-	-	5	-	-	-	SALEABLE		34951-1611	34951-1621	34951-1631	34951-1641
								-	-	-	-	13	-	-	-						
MX150 ASSY RCP 2X8 CS CPA BK A/6	334723041	A-BLACK-CLIP	GCP	PLR	CPA	M	R	1	-	3	4	5	-	7	-	SALEABLE		34951-1611	34951-1621	34951-1631	34951-1641
								-	-	11	12	13	14	15	-						
MX150 ASSY RCP 2X8 CS BK A/12	334723042	A-BLACK-CLIP	GCP	PLR		M	R	-	-	-	-	-	-	-	-	SALEABLE		34951-1611	34951-1621	34951-1631	34951-1641
								9	10	11	-	-	-	-	16						
MX150 ASSY RCP 2X8 CS BK A/10	334723043	A-BLACK-CLIP	GCP	PLR		M	R	-	2	-	-	-	-	-	8	SALEABLE		34951-1611	34951-1621	34951-1631	34951-1641
								9	10	11	-	-	-	-	16						
MX150 ASSY RCP 2X8 CS BK A/12	334723044	A-BLACK-CLIP	GCP	PLR		M	R	-	-	-	-	-	6	-	-	SALEABLE		34951-1611	34951-1621	34951-1631	34951-1641
								-	-	-	-	13	14	15	-						
MX150 ASSY RCP 2X8 CS BK A/8	334723045	A-BLACK-CLIP	GCP	PLR		M	R	1	-	3	-	-	-	-	8	SALEABLE		34951-1611	34951-1621	34951-1631	34951-1641
								9	-	-	12	13	14	15	-						
MX150 ASSY RCP 2X8 CS BK A/2	334723046	A-BLACK-CLIP	GCP	PLR		M	R	1	2	3	4	5	6	7	8	SALEABLE		34951-1611	34951-1621	34951-1631	34951-1641
								9	10	-	12	13	14	15	-						

molex

MX150 RECEPTACLE 2X8 SEALED ASSEMBLY MAT SEAL
BOM AND PIN OUT SHEET

ASSEMBLY DESCRIPTION	ASSEMBLY PART NUMBER	COMPONENT						BLOCKED TERMINALS								STATUS	COMMENT	OPTIONAL ATTACHMENTS SOLD SEPARATELY			
		THE PRESENCE OF AN ABBREVIATION INDICATES THE PRESENCE OF THAT COMPONENT						CAVITY WITH A NUMBER INDICATES BLOCKED TERMINAL POSITION CAVITY WITHOUT A NUMBER INDICATES OPEN TERMINAL POSITION													
		HOUSING KEY/COLOR	GROMMET CAP	PLR	CPA	MAT SEAL	RING SEAL											BACKSHELL WITH RIBS	BACKSHELL WITHOUT RIBS	90^0 ADAPTOR WITH RIBS	90^0 ADAPTOR WITHOUT RIBS
MX150 ASSY RCP 2X8 CS BK A/11	334723047	A-BLACK-CLIP	GCP	PLR		M	R	-	-	-	-	-	-	-	-	SALEABLE		34951-1611	34951-1621	34951-1631	34951-1641
								-	10	11	-	13	14	15	-						
MX150 ASSY RCP 2X8 CS BK A/9	334723048	A-BLACK-CLIP	GCP	PLR		M	R	1	-	-	-	-	-	-	8	SALEABLE		34951-1611	34951-1621	34951-1631	34951-1641
								-	10	11	-	13	14	15	-						
MX150 ASSY RCP 2X8 CS BK A/11	334723049	A-BLACK-CLIP	GCP	PLR		M	R	1	-	-	-	-	-	-	8	SALEABLE		34951-1611	34951-1621	34951-1631	34951-1641
								-	-	-	-	13	14	15	-						
MX150 ASSY RCP 2X8 CS BK A/12	334723050	A-BLACK-CLIP	GCP	PLR		M	R	-	2	-	-	-	-	-	-	SALEABLE		34951-1611	34951-1621	34951-1631	34951-1641
								-	-	-	-	13	-	15	16						
MX150 ASSY RCP 2X8 CS BK A/12	334723051	A-BLACK-CLIP	GCP	PLR		M	R	-	-	-	-	-	-	-	-	SALEABLE		34951-1611	34951-1621	34951-1631	34951-1641
								-	-	11	12	-	-	15	16						
MX150 ASSY RCP 2X8 CS BK A/13	334723052	A-BLACK-CLIP	GCP	PLR		M	R	-	-	-	-	-	-	-	-	SALEABLE		34951-1611	34951-1621	34951-1631	34951-1641
								-	-	-	-	13	14	15	-						
MX150 ASSY RCP 2X8 CS BK A/10	334723053	A-BLACK-CLIP	GCP	PLR		M	R	-	2	-	-	-	-	-	-	SALEABLE		34951-1611	34951-1621	34951-1631	34951-1641
								-	-	11	12	13	-	15	16						
MX150 ASSY RCP 2X8 CS BK A/8	334723054	A-BLACK-CLIP	GCP	PLR		M	R	-	-	3	-	-	6	-	-	SALEABLE		34951-1611	34951-1621	34951-1631	34951-1641
								9	-	11	-	13	14	15	16						
MX150 ASSY RCP 2X8 CS BK A/7	334723055	A-BLACK-CLIP	GCP	PLR		M	R	-	-	-	-	5	6	7	-	SALEABLE		34951-1611	34951-1621	34951-1631	34951-1641
								9	10	11	-	13	14	15	-						
MX150 ASSY RCP 2X8 CS BK A/8	334723056	A-BLACK-CLIP	GCP	PLR		M	R	-	2	-	4	5	-	-	8	SALEABLE		34951-1611	34951-1621	34951-1631	34951-1641
								-	-	-	-	13	14	15	16						
MX150 ASSY RCP 2X8 CS BK A/9	334723057	A-BLACK-CLIP	GCP	PLR		M	R	-	-	-	-	-	6	-	-	SALEABLE		34951-1611	34951-1621	34951-1631	34951-1641
								-	-	11	12	13	14	15	16						
MX150 ASSY RCP 2X8 CS BK A/5	334723058	A-BLACK-CLIP	GCP	PLR		M	R	-	2	-	4	5	-	-	8	SALEABLE		34951-1611	34951-1621	34951-1631	34951-1641
								-	10	11	12	13	14	15	16						
MX150 ASSY RCP 2X8 CS BK A/10	334723059	A-BLACK-CLIP	GCP	PLR		M	R	-	-	-	-	-	-	-	-	SALEABLE		34951-1611	34951-1621	34951-1631	34951-1641
								9	-	11	12	13	14	15	-						
MX150 ASSY RCP 2X8 CS BK A/8	334723060	A-BLACK-CLIP	GCP	PLR		M	R	-	-	-	-	-	-	-	8	SALEABLE		34951-1611	34951-1621	34951-1631	34951-1641
								-	10	11	12	13	14	15	16						
MX150 ASSY RCP 2X8 CS BK A/10	334723061	A-BLACK-CLIP	GCP	PLR		M	R	-	-	-	-	-	6	-	-	SALEABLE		34951-1611	34951-1621	34951-1631	34951-1641
								-	-	11	-	13	14	15	16						
MX150 ASSY RCP 2X8 CS CPA BK A/10	334723062	A-BLACK-CLIP	GCP	PLR	CPA	M	R	1	2	3	-	-	-	-	8	SALEABLE		34951-1611	34951-1621	34951-1631	34951-1641
								9	-	-	-	-	-	-	16						
MX150 ASSY RCP 2X8 CS CPA BK A/15	334723063	A-BLACK-CLIP	GCP	PLR	CPA	M	R	-	-	-	-	-	-	-	-	SALEABLE		34951-1611	34951-1621	34951-1631	34951-1641
								-	-	-	-	-	-	-	16						
MX150 ASSY RCP 2X8 CS CPA BK A/12	334723064	A-BLACK-CLIP	GCP	PLR	CPA	M	R	-	-	-	-	-	-	-	-	SALEABLE		34951-1611	34951-1621	34951-1631	34951-1641
								-	-	-	12	13	14	15	-						
MX150 ASSY RCP 2X8 CS BK A/12	334723065	A-BLACK-CLIP	GCP	PLR		M	R	-	-	-	-	-	-	-	-	SALEABLE		34951-1611	34951-1621	34951-1631	34951-1641
								-	-	-	12	13	14	15	-						
MX150 ASSY RCP 2X8 CS CPA BK A/12	334723066	A-BLACK-CLIP	GCP	PLR	CPA	M	R	1	-	-	-	-	-	-	-	SALEABLE		34951-1611	34951-1621	34951-1631	34951-1641
								9	10	-	-	13	-	-	-						
MX150 ASSY RCP 2X8 CS CPA BK A/12	334723067	A-BLACK-CLIP	GCP	PLR	CPA	M	R	-	-	-	-	-	-	-	-	SALEABLE		34951-1611	34951-1621	34951-1631	34951-1641
								-	-	-	-	13	14	15	16						
MX150 ASSY RCP 2X8 CS BK A/12	334723068	A-BLACK-CLIP	GCP	PLR		M	R	-	-	-	-	-	-	-	-	SALEABLE		34951-1611	34951-1621	34951-1631	34951-1641
								-	-	-	-	13	14	15	16						
MX150 ASSY RCP 2X8 CS LG B/10	334723069	B-LIGHT GRAY-CLIP	GCP	PLR		M	R	1	-	-	4	5	-	-	8	SALEABLE		34951-1611	34951-1621	34951-1631	34951-1641
								-	-	-	-	13	14	-	-						
MX150 ASSY RCP 2X8 CS CPA LG B/4	334723070	B-LIGHT GRAY-CLIP	GCP	PLR	CPA	M	R	1	2	-	4	5	6	7	-	SALEABLE		34951-1611	34951-1621	34951-1631	34951-1641
								9	10	11	-	-	14	15	16						
MX150 ASSY RCP 2X8 CS CPA LG B/14	334723071	B-LIGHT GRAY-CLIP	GCP	PLR	CPA	M	R	-	-	-	-	-	-	-	-	SALEABLE		34951-1611	34951-1621	34951-1631	34951-1641
								-	-	-	12	13	-	-	-						
MX150 ASSY RCP 2X8 CS CPA LG B/2	334723072	B-LIGHT GRAY-CLIP	GCP	PLR	CPA	M	R	1	2	3	4	5	6	7	8	SALEABLE		34951-1611	34951-1621	34951-1631	34951-1641
								9	10	11	-	-	14	15	16						
MX150 ASSY RCP 2X8 CPA BK A/3	334728001	A-BLACK	GCP	PLR	CPA	M	R	1	2	3	4	5	6	-	-	SALEABLE		N/A	N/A	N/A	N/A
								-	10	11	12	13	14	15	16						

molex

MX150 RECEPTACLE 2X8 SEALED ASSEMBLY MAT SEAL
BOM AND PIN OUT SHEET

ASSEMBLY DESCRIPTION	ASSEMBLY PART NUMBER	COMPONENT						BLOCKED TERMINALS								STATUS	COMMENT	OPTIONAL ATTACHMENTS SOLD SEPARATELY			
		THE PRESENCE OF AN ABBREVIATION INDICATES THE PRESENCE OF THAT COMPONENT						CAVITY WITH A NUMBER INDICATES BLOCKED TERMINAL POSITION CAVITY WITHOUT A NUMBER INDICATES OPEN TERMINAL POSITION													
		HOUSING KEY/COLOR	GROMMET CAP	PLR	CPA	MAT SEAL	RING SEAL											BACKSHELL WITH RIBS	BACKSHELL WITHOUT RIBS	90^0 ADAPTOR WITH RIBS	90^0 ADAPTOR WITHOUT RIBS
MX150 ASSY RCP 2X8 CPA BK A/11	334728002	A-BLACK	GCP	PLR	CPA	M	R	-	-	-	-	-	-	-	-	SALEABLE		N/A	N/A	N/A	N/A
								-	10	-	-	13	14	15	16						
MX150 ASSY RCP 2X8 CPA BK A/8	334728003	A-BLACK	GCP	PLR	CPA	M	R	1	2	3	4	5	6	-	-	SALEABLE		N/A	N/A	N/A	N/A
								-	-	11	12	-	-	-	-						
MX150 ASSY RCP 2X8 BK A/10	334728004	A-BLACK	GCP	PLR		M	R	-	2	-	-	5	-	7	-	SALEABLE		N/A	N/A	N/A	N/A
								9	-	11	-	-	-	-	16						
MX150 ASSY RCP 2X8 BK A/6	334728005	A-BLACK	GCP	PLR		M	R	1	2	3	4	5	6	7	8	SALEABLE		N/A	N/A	N/A	N/A
								-	-	11	-	-	-	-	16						
MX150 ASSY RCP 2X8 BK A/9	334728006	A-BLACK	GCP	PLR		M	R	1	-	-	4	5	6	7	8	SALEABLE		N/A	N/A	N/A	N/A
								-	-	11	-	-	-	-	-						
MX150 ASSY RCP 2X8 BK A/11	334728007	A-BLACK	GCP	PLR		M	R	1	-	-	4	5	6	7	-	SALEABLE		N/A	N/A	N/A	N/A
								-	-	-	-	-	-	-	-						
MX150 ASSY RCP 2X8 CPA BK A/8	334728008	A-BLACK	GCP	PLR	CPA	M	R	1	2	3	4	5	6	-	-	SALEABLE		N/A	N/A	N/A	N/A
								-	-	-	12	13	-	-	-						
MX150 ASSY RCP 2X8 CPA BK A/11	334728009	A-BLACK	GCP	PLR	CPA	M	R	-	-	-	-	-	-	7	8	SALEABLE		N/A	N/A	N/A	N/A
								-	-	-	-	-	14	15	16						
MX150 ASSY RCP 2X8 CPA BK A/3	334728010	A-BLACK	GCP	PLR	CPA	M	R	1	2	3	4	5	6	7	8	SALEABLE		N/A	N/A	N/A	N/A
								-	-	-	12	13	14	15	16						
MX150 ASSY RCP 2X8 CPA BK A/13	334728011	A-BLACK	GCP	PLR	CPA	M	R	-	-	-	4	-	-	-	-	SALEABLE		N/A	N/A	N/A	N/A
								9	-	-	12	-	-	-	-						
MX150 ASSY RCP 2X8 CPA BK A/8	334728013	A-BLACK	GCP	PLR	CPA	M	R	1	2	-	4	-	6	7	8	SALEABLE		N/A	N/A	N/A	N/A
								9	-	-	12	-	-	-	-						
MX150 ASSY RCP 2X8 BK A/13	334728015	A-BLACK	GCP	PLR		M	R	1	-	-	-	-	-	-	8	SALEABLE		N/A	N/A	N/A	N/A
								-	-	11	-	-	-	-	-						
MX150 ASSY RCP 2X8 BK A/11	334728016	A-BLACK	GCP	PLR		M	R	-	-	-	-	-	-	-	-	SALEABLE		N/A	N/A	N/A	N/A
								-	10	11	12	13	-	-	16						
MX150 ASSY RCP 2X8 BK A/5	334728017	A-BLACK	GCP	PLR		M	R	1	2	-	4	5	6	7	8	SALEABLE		N/A	N/A	N/A	N/A
								-	10	-	-	-	14	15	16						
MX150 ASSY RCP 2X8 BK A/10	334728018	A-BLACK	GCP	PLR		M	R	1	-	-	-	5	6	-	-	SALEABLE		N/A	N/A	N/A	N/A
								-	10	-	-	13	14	-	-						
MX150 ASSY RCP 2X8 BK A/7	334728019	A-BLACK	GCP	PLR		M	R	-	-	-	4	5	-	7	8	SALEABLE		N/A	N/A	N/A	N/A
								-	-	11	12	13	14	15	-						
MX150 ASSY RCP 2X8 BK A/10	334728020	A-BLACK	GCP	PLR		M	R	-	-	-	-	-	-	7	8	SALEABLE		N/A	N/A	N/A	N/A
								9	-	-	-	-	14	15	16						
MX150 ASSY RCP 2X8 CPA BK A/15	334728021	A-BLACK	GCP	PLR	CPA	M	R	-	-	-	-	-	-	-	-	SALEABLE		N/A	N/A	N/A	N/A
								-	-	-	-	-	-	-	16						
MX150 ASSY RCP 2X8 CPA BK A/9	334728022	A-BLACK	GCP	PLR	CPA	M	R	-	-	-	-	-	-	-	-	SALEABLE		N/A	N/A	N/A	N/A
								-	10	11	12	13	14	15	16						
MX150 ASSY RCP 2X8 CPA BK A/11	334728023	A-BLACK	GCP	PLR	CPA	M	R	-	-	-	-	-	-	-	-	SALEABLE		N/A	N/A	N/A	N/A
								-	10	11	12	13	-	-	16						
MX150 ASSY RCP 2X8 CPA BK A/13	334728024	A-BLACK	GCP	PLR	CPA	M	R	-	-	-	-	-	-	-	-	SALEABLE		N/A	N/A	N/A	N/A
								-	-	-	-	-	14	15	16						
MX150 ASSY RCP 2X8 CPA BK A/6	334728025	A-BLACK	GCP	PLR	CPA	M	R	-	-	-	-	-	-	7	8	SALEABLE		N/A	N/A	N/A	N/A
								9	10	11	12	13	14	15	16						
MX150 ASSY RCP 2X8 CPA BK A/10	334728026	A-BLACK	GCP	PLR	CPA	M	R	-	-	-	-	-	-	-	-	SALEABLE		N/A	N/A	N/A	N/A
								-	-	11	12	13	14	15	16						
MX150 ASSY RCP 2X8 CPA BK A/12	334728027	A-BLACK	GCP	PLR	CPA	M	R	-	-	-	-	-	-	-	-	SALEABLE		N/A	N/A	N/A	N/A
								-	-	-	-	13	14	15	16						
MX150 ASSY RCP 2X8 CPA BK A/4	334728028	A-BLACK	GCP	PLR	CPA	M	R	1	2	3	4	5	6	-	-	SALEABLE		N/A	N/A	N/A	N/A
								-	-	11	12	13	14	15	16						
MX150 ASSY RCP 2X8 BK A/8	334728029	A-BLACK	GCP	PLR		M	R	1	2	-	4	-	6	7	8	SALEABLE		N/A	N/A	N/A	N/A
								-	-	11	12	-	-	-	-						
MX150 ASSY RCP 2X8 BK A/9	334728030	A-BLACK	GCP	PLR		M	R	-	2	-	4	-	6	7	8	SALEABLE		N/A	N/A	N/A	N/A
								-	-	-	12	-	-	-	16						

molex

MX150 RECEPTACLE 2X8 SEALED ASSEMBLY MAT SEAL
BOM AND PIN OUT SHEET

ASSEMBLY DESCRIPTION	ASSEMBLY PART NUMBER	COMPONENT						BLOCKED TERMINALS								STATUS	COMMENT	OPTIONAL ATTACHMENTS SOLD SEPARATELY			
		THE PRESENCE OF AN ABBREVIATION INDICATES THE PRESENCE OF THAT COMPONENT						CAVITY WITH A NUMBER INDICATES BLOCKED TERMINAL POSITION CAVITY WITHOUT A NUMBER INDICATES OPEN TERMINAL POSITION													
		HOUSING KEY/COLOR	GROMMET CAP	PLR	CPA	MAT SEAL	RING SEAL											BACKSHELL WITH RIBS	BACKSHELL WITHOUT RIBS	90^0 ADAPTOR WITH RIBS	90^0 ADAPTOR WITHOUT RIBS
MX150 ASSY RCP 2X8 BK A/8	334728031	A-BLACK	GCP	PLR		M	R	-	-	3	-	-	-	-	8	SALEABLE		N/A	N/A	N/A	N/A
								-	-	11	12	13	14	15	16						
MX150 ASSY RCP 2X8 BK A/2	334728032	A-BLACK	GCP	PLR		M	R	1	2	3	4	5	6	7	8	SALEABLE		N/A	N/A	N/A	N/A
								-	10	11	12	13	14	15	-						
MX150 ASSY RCP 2X8 CPA BK A/8	334728033	A-BLACK	GCP	PLR	CPA	M	R	-	-	-	-	-	-	7	8	SALEABLE		N/A	N/A	N/A	N/A
								9	10	-	-	13	14	15	16						
MX150 ASSY RCP 2X8 BK A/3	334728034	A-BLACK	GCP	PLR		M	R	1	2	3	4	5	6	7	8	SALEABLE		N/A	N/A	N/A	N/A
								9	10	11	-	-	-	15	16						
MX150 ASSY RCP 2X8 CPA BK A/14	334728037	A-BLACK	GCP	PLR	CPA	M	R	-	-	-	-	-	-	7	-	SALEABLE		N/A	N/A	N/A	N/A
								-	-	-	-	-	-	-	16						
MX150 ASSY RCP 2X8 BK A/7	334728038	A-BLACK	GCP	PLR		M	R	-	2	-	-	-	-	7	-	SALEABLE		N/A	N/A	N/A	N/A
								9	10	11	12	13	14	-	16						
MX150 ASSY RCP 2X8 BK A/5	334728039	A-BLACK	GCP	PLR		M	R	1	2	-	-	-	-	7	8	SALEABLE		N/A	N/A	N/A	N/A
								9	10	11	12	13	14	-	16						
MX150 ASSY RCP 2X8 BK A/9	334728040	A-BLACK	GCP	PLR		M	R	-	2	-	-	-	-	7	8	SALEABLE		N/A	N/A	N/A	N/A
								-	-	-	-	13	14	15	16						
MX150 ASSY RCP 2X8 BK A/7	334728042	A-BLACK	GCP	PLR		M	R	-	-	-	-	5	-	-	-	SALEABLE		N/A	N/A	N/A	N/A
								9	10	11	12	13	14	15	16						
MX150 ASSY RCP 2X8 BK A/10	334728043	A-BLACK	GCP	PLR		M	R	-	-	-	-	-	-	-	-	SALEABLE		N/A	N/A	N/A	N/A
								-	10	11	12	13	14	-	16						
MX150 ASSY RCP 2X8 BK A/9	334728044	A-BLACK	GCP	PLR		M	R	-	-	-	-	-	6	7	-	SALEABLE		N/A	N/A	N/A	N/A
								9	10	-	-	13	14	15	-						
MX150 ASSY RCP 2X8 BK A/4	334728045	A-BLACK	GCP	PLR		M	R	1	2	3	4	5	6	7	-	SALEABLE		N/A	N/A	N/A	N/A
								9	-	-	12	13	-	15	16						
MX150 ASSY RCP 2X8 BK A/8	334728046	A-BLACK	GCP	PLR		M	R	1	2	3	-	-	-	7	-	SALEABLE		N/A	N/A	N/A	N/A
								9	-	-	12	13	-	-	16						
MX150 ASSY RCP 2X8 BK A/11	334728047	A-BLACK	GCP	PLR		M	R	-	2	-	-	5	-	-	-	SALEABLE		N/A	N/A	N/A	N/A
								9	-	-	12	13	-	-	-						
MX150 ASSY RCP 2X8 BK A/11	334728048	A-BLACK	GCP	PLR		M	R	-	-	-	4	-	6	7	-	SALEABLE		N/A	N/A	N/A	N/A
								9	-	-	-	-	-	-	16						
MX150 ASSY RCP 2X8 BK A/14	334728049	A-BLACK	GCP	PLR		M	R	-	-	-	4	-	-	-	-	SALEABLE		N/A	N/A	N/A	N/A
								-	-	-	-	-	-	-	16						
MX150 ASSY RCP 2X8 BK A/13	334728050	A-BLACK	GCP	PLR		M	R	-	-	-	4	-	-	-	-	SALEABLE		N/A	N/A	N/A	N/A
								9	-	-	-	-	-	-	16						
MX150 ASSY RCP 2X8 BK A/9	334728051	A-BLACK	GCP	PLR		M	R	-	-	-	-	-	-	7	-	SALEABLE		N/A	N/A	N/A	N/A
								9	10	-	-	13	14	15	16						
MX150 ASSY RCP 2X8 BK A/10	334728052	A-BLACK	GCP	PLR		M	R	-	-	-	-	-	-	7	-	SALEABLE		N/A	N/A	N/A	N/A
								9	10	-	-	13	-	15	16						
MX150 ASSY RCP 2X8 BK A/8	334728053	A-BLACK	GCP	PLR		M	R	-	-	-	-	-	-	7	-	SALEABLE		N/A	N/A	N/A	N/A
								9	10	11	-	13	14	15	16						
MX150 ASSY RCP 2X8 CPA BK A/14	334728057	A-BLACK	GCP	PLR	CPA	M	R	-	-	-	4	-	-	-	-	SALEABLE		N/A	N/A	N/A	N/A
								9	-	-	-	-	-	-	-						
MX150 ASSY RCP 2X8 BK A/6	334728058	A-BLACK	GCP	PLR		M	R	1	2	3	-	-	6	7	8	SALEABLE		N/A	N/A	N/A	N/A
								-	10	11	-	-	14	-	16						
MX150 ASSY RCP 2X8 BK A/9	334728059	A-BLACK	GCP	PLR		M	R	-	2	3	-	-	6	7	-	SALEABLE		N/A	N/A	N/A	N/A
								-	10	11	-	-	14	-	-						
MX150 ASSY RCP 2X8 BK A/11	334728060	A-BLACK	GCP	PLR		M	R	-	2	-	-	-	6	7	-	SALEABLE		N/A	N/A	N/A	N/A
								-	10	-	-	-	14	-	-						
MX150 ASSY RCP 2X8 BK A/12	334728062	A-BLACK	GCP	PLR		M	R	-	-	-	-	-	6	-	8	SALEABLE		N/A	N/A	N/A	N/A
								-	-	-	-	-	-	15	16						
MX150 ASSY RCP 2X8 BK A/12	334728063	A-BLACK	GCP	PLR		M	R	-	-	-	-	-	-	-	8	SALEABLE		N/A	N/A	N/A	N/A
								9	-	-	-	-	-	15	16						
MX150 ASSY RCP 2X8 BK A/8	334728064	A-BLACK	GCP	PLR		M	R	-	-	-	4	-	-	-	8	SALEABLE		N/A	N/A	N/A	N/A
								9	10	-	-	13	14	15	16						

molex

MX150 RECEPTACLE 2X8 SEALED ASSEMBLY MAT SEAL
BOM AND PIN OUT SHEET

ASSEMBLY DESCRIPTION	ASSEMBLY PART NUMBER	COMPONENT						BLOCKED TERMINALS								STATUS	COMMENT	OPTIONAL ATTACHMENTS SOLD SEPARATELY			
		THE PRESENCE OF AN ABBREVIATION INDICATES THE PRESENCE OF THAT COMPONENT						CAVITY WITH A NUMBER INDICATES BLOCKED TERMINAL POSITION CAVITY WITHOUT A NUMBER INDICATES OPEN TERMINAL POSITION													
		HOUSING KEY/COLOR	GROMMET CAP	PLR	CPA	MAT SEAL	RING SEAL											BACKSHELL WITH RIBS	BACKSHELL WITHOUT RIBS	90^0 ADAPTOR WITH RIBS	90^0 ADAPTOR WITHOUT RIBS
MX150 ASSY RCP 2X8 BK A/10	334728065	A-BLACK	GCP	PLR		M	R	-	-	-	4	-	-	-	8	SALEABLE		N/A	N/A	N/A	N/A
								9	10	-	-	-	-	15	16						
MX150 ASSY RCP 2X8 BK A/9	334728066	A-BLACK	GCP	PLR		M	R	-	-	-	4	-	6	-	8	SALEABLE		N/A	N/A	N/A	N/A
								-	-	11	-	13	-	15	16						
MX150 ASSY RCP 2X8 BK A/12	334728067	A-BLACK	GCP	PLR		M	R	-	-	-	-	-	-	-	8	SALEABLE		N/A	N/A	N/A	N/A
								-	-	11	-	13	-	-	16						
MX150 ASSY RCP 2X8 BK A/10	334728068	A-BLACK	GCP	PLR		M	R	-	-	-	-	5	-	-	8	SALEABLE		N/A	N/A	N/A	N/A
								-	10	11	-	-	14	15	-						
MX150 ASSY RCP 2X8 BK A/14	334728071	A-BLACK	GCP	PLR		M	R	-	-	-	-	-	-	-	-	SALEABLE		N/A	N/A	N/A	N/A
								-	-	-	-	-	-	15	16						
MX150 ASSY RCP 2X8 BK A/15	334728072	A-BLACK	GCP	PLR		M	R	-	-	-	4	-	-	-	-	SALEABLE		N/A	N/A	N/A	N/A
								-	-	-	-	-	-	-	-						
MX150 ASSY RCP 2X8 BK A/14	334728073	A-BLACK	GCP	PLR		M	R	-	-	3	-	-	-	-	-	SALEABLE		N/A	N/A	N/A	N/A
								9	-	-	-	-	-	-	-						
MX150 ASSY RCP 2X8 BK A/15	334728074	A-BLACK	GCP	PLR		M	R	-	-	-	-	-	-	-	-	SALEABLE		N/A	N/A	N/A	N/A
								-	-	11	-	-	-	-	-						
MX150 ASSY RCP 2X8 BK A/14	334728075	A-BLACK	GCP	PLR		M	R	-	-	-	-	-	-	-	-	SALEABLE		N/A	N/A	N/A	N/A
								9	-	-	-	-	14	-	-						
MX150 ASSY RCP 2X8 BK A/9	334728076	A-BLACK	GCP	PLR		M	R	-	-	-	-	-	-	7	-	SALEABLE		N/A	N/A	N/A	N/A
								-	10	11	-	13	14	15	16						
MX150 ASSY RCP 2X8 BK A/8	334728077	A-BLACK	GCP	PLR		M	R	-	-	3	-	-	-	-	-	SALEABLE		N/A	N/A	N/A	N/A
								-	10	11	12	13	14	15	16						
MX150 ASSY RCP 2X8 BK A/10	334728078	A-BLACK	GCP	PLR		M	R	-	-	-	-	-	-	-	-	SALEABLE		N/A	N/A	N/A	N/A
								9	10	11	-	13	-	15	16						
MX150 ASSY RCP 2X8 BK A/8	334728079	A-BLACK	GCP	PLR		M	R	1	-	-	-	-	-	-	8	SALEABLE		N/A	N/A	N/A	N/A
								9	10	11	-	13	-	15	16						
MX150 ASSY RCP 2X8 BK A/2	334728080	A-BLACK	GCP	PLR		M	R	1	2	3	4	5	6	7	8	SALEABLE		N/A	N/A	N/A	N/A
								9	10	11	-	13	-	15	16						
MX150 ASSY RCP 2X8 BK A/7	334728084	A-BLACK	GCP	PLR		M	R	-	2	-	-	5	-	-	-	SALEABLE		N/A	N/A	N/A	N/A
								-	10	11	12	13	14	15	16						
MX150 ASSY RCP 2X8 BK A/4	334728085	A-BLACK	GCP	PLR		M	R	-	2	3	-	5	6	-	-	SALEABLE		N/A	N/A	N/A	N/A
								9	10	11	12	13	14	15	16						
MX150 ASSY RCP 2X8 BK A/10	334728086	A-BLACK	GCP	PLR		M	R	1	-	-	-	-	-	-	-	SALEABLE		N/A	N/A	N/A	N/A
								9	-	11	-	13	-	15	16						
MX150 ASSY RCP 2X8 BK A/9	334728087	A-BLACK	GCP	PLR		M	R	1	-	-	-	-	-	-	-	SALEABLE		N/A	N/A	N/A	N/A
								9	-	11	12	-	14	15	16						
MX150 ASSY RCP 2X8 BK A/10	334728090	A-BLACK	GCP	PLR		M	R	-	-	-	-	-	-	-	-	SALEABLE		N/A	N/A	N/A	N/A
								9	10	11	12	-	14	15	-						
MX150 ASSY RCP 2X8 BK A/15	334728091	A-BLACK	GCP	PLR		M	R	-	-	-	-	-	-	-	-	SALEABLE		N/A	N/A	N/A	N/A
								-	-	-	12	-	-	-	-						
MX150 ASSY RCP 2X8 BK A/13	334728092	A-BLACK	GCP	PLR		M	R	-	-	-	-	5	6	-	-	SALEABLE		N/A	N/A	N/A	N/A
								-	-	-	12	-	-	-	-						
MX150 ASSY RCP 2X8 BK A/13	334728093	A-BLACK	GCP	PLR		M	R	-	-	-	-	5	6	7	-	SALEABLE		N/A	N/A	N/A	N/A
								-	-	-	-	-	-	-	-						
MX150 ASSY RCP 2X8 BK A/5	334728094	A-BLACK	GCP	PLR		M	R	1	2	3	4	5	6	7	8	SALEABLE		N/A	N/A	N/A	N/A
								-	10	-	-	13	-	15	-						
MX150 ASSY RCP 2X8 BK A/10	334728095	A-BLACK	GCP	PLR		M	R	-	-	-	-	-	6	-	-	SALEABLE		N/A	N/A	N/A	N/A
								-	10	-	-	13	14	15	16						
MX150 ASSY RCP 2X8 BK A/12	334728096	A-BLACK	GCP	PLR		M	R	-	-	-	-	5	-	-	-	SALEABLE		N/A	N/A	N/A	N/A
								9	-	-	-	-	-	15	16						
MX150 ASSY RCP 2X8 BK A/10	334728097	A-BLACK	GCP	PLR		M	R	-	-	-	-	5	-	-	-	SALEABLE		N/A	N/A	N/A	N/A
								9	-	-	12	13	-	15	16						
MX150 ASSY RCP 2X8 BK A/12	334728098	A-BLACK	GCP	PLR		M	R	-	-	3	-	-	-	-	-	SALEABLE		N/A	N/A	N/A	N/A
								9	-	-	12	13	-	-	-						

molex

MX150 RECEPTACLE 2X8 SEALED ASSEMBLY MAT SEAL
BOM AND PIN OUT SHEET

ASSEMBLY DESCRIPTION	ASSEMBLY PART NUMBER	COMPONENT						BLOCKED TERMINALS								STATUS	COMMENT	OPTIONAL ATTACHMENTS SOLD SEPARATELY			
		THE PRESENCE OF AN ABBREVIATION INDICATES THE PRESENCE OF THAT COMPONENT						CAVITY WITH A NUMBER INDICATES BLOCKED TERMINAL POSITION CAVITY WITHOUT A NUMBER INDICATES OPEN TERMINAL POSITION													
		HOUSING KEY/COLOR	GROMMET CAP	PLR	CPA	MAT SEAL	RING SEAL											BACKSHELL WITH RIBS	BACKSHELL WITHOUT RIBS	90^0 ADAPTOR WITH RIBS	90^0 ADAPTOR WITHOUT RIBS
MX150 ASSY RCP 2X8 BK A/13	334728099	A-BLACK	GCP	PLR		M	R	-	-	3	-	5	-	-	-	SALEABLE		N/A	N/A	N/A	N/A
								9	-	-	-	-	-	-	-						
MX150 ASSY RCP 2X8 CPA BK A/6	334728100	A-BLACK	GCP	PLR	CPA	M	R	1	2	3	4	5	6	7	8	SALEABLE		N/A	N/A	N/A	N/A
								-	-	-	-	-	14	15	-						
MX150 ASSY RCP 2X8 BK A/6	334728101	A-BLACK	GCP	PLR		M	R	1	2	3	4	5	6	7	8	SALEABLE		N/A	N/A	N/A	N/A
								-	-	-	-	-	14	15	-						
MX150 ASSY RCP 2X8 CPA BK A/14	334728102	A-BLACK	GCP	PLR	CPA	M	R	-	-	-	-	-	-	-	-	SALEABLE		N/A	N/A	N/A	N/A
								-	-	11	-	-	14	-	-						
MX150 ASSY RCP 2X8 CPA BK A/7	334728104	A-BLACK	GCP	PLR	CPA	M	R	-	2	-	4	5	-	-	8	SALEABLE		N/A	N/A	N/A	N/A
								-	-	-	12	13	14	15	16						
MX150 ASSY RCP 2X8 CPA BK A/14	334728105	A-BLACK	GCP	PLR	CPA	M	R	-	-	-	-	-	-	-	8	SALEABLE		N/A	N/A	N/A	N/A
								-	-	-	-	-	-	-	16						
MX150 ASSY RCP 2X8 CPA BK A/8	334728106	A-BLACK	GCP	PLR	CPA	M	R	-	-	-	4	5	-	-	8	SALEABLE		N/A	N/A	N/A	N/A
								-	-	-	12	13	14	15	16						
MX150 ASSY RCP 2X8 BK A/8	334728107	A-BLACK	GCP	PLR		M	R	-	-	3	-	-	6	-	-	SALEABLE		N/A	N/A	N/A	N/A
								-	-	11	12	13	14	15	16						
MX150 ASSY RCP 2X8 BK A/14	334728109	A-BLACK	GCP	PLR		M	R	-	-	3	-	-	-	-	-	SALEABLE		N/A	N/A	N/A	N/A
								-	-	-	-	-	-	-	16						
MX150 ASSY RCP 2X8 BK A/6	334728110	A-BLACK	GCP	PLR		M	R	1	-	-	-	5	6	7	-	SALEABLE		N/A	N/A	N/A	N/A
								9	10	11	12	13	-	-	16						
MX150 ASSY RCP 2X8 BK A/6	334728111	A-BLACK	GCP	PLR		M	R	1	-	-	-	5	6	7	8	SALEABLE		N/A	N/A	N/A	N/A
								-	10	11	12	13	-	-	16						
MX150 ASSY RCP 2X8 BK A/14	334728112	A-BLACK	GCP	PLR		M	R	-	-	3	-	-	-	-	-	SALEABLE		N/A	N/A	N/A	N/A
								-	-	-	-	-	-	15	-						
MX150 ASSY RCP 2X8 CPA BK A/14	334728113	A-BLACK	GCP	PLR	CPA	M	R	-	-	3	-	-	-	-	-	SALEABLE		N/A	N/A	N/A	N/A
								-	-	-	-	-	-	15	-						
MX150 ASSY RCP 2X8 BK A/8	334728114	A-BLACK	GCP	PLR		M	R	1	2	-	4	5	6	-	8	SALEABLE		N/A	N/A	N/A	N/A
								-	10	-	-	-	14	-	-						
MX150 ASSY RCP 2X8 LG B/11	334728115	B-LIGHT GRAY	GCP	PLR		M	R	-	-	-	-	-	6	-	-	SALEABLE		N/A	N/A	N/A	N/A
								-	-	-	-	13	14	15	16						
MX150 ASSY RCP 2X8 LG B/6	334728116	B-LIGHT GRAY	GCP	PLR		M	R	1	2	3	4	-	6	7	-	SALEABLE		N/A	N/A	N/A	N/A
								-	-	-	-	13	14	15	16						
MX150 ASSY RCP 2X8 LG B/3	334728117	B-LIGHT GRAY	GCP	PLR		M	R	-	-	-	4	5	6	7	8	SALEABLE		N/A	N/A	N/A	N/A
								9	10	11	12	13	14	15	16						
MX150 ASSY RCP 2X8 BK A/12	334728118	A-BLACK	GCP	PLR		M	R	-	-	-	-	5	-	-	-	SALEABLE		N/A	N/A	N/A	N/A
								-	10	11	-	-	14	-	-						
MX150 ASSY RCP 2X8 BK A/9	334728119	A-BLACK	GCP	PLR		M	R	-	-	3	-	5	-	-	8	SALEABLE		N/A	N/A	N/A	N/A
								-	10	11	-	-	14	15	-						
MX150 ASSY RCP 2X8 BK A/10	334728120	A-BLACK	GCP	PLR		M	R	-	-	3	-	5	-	-	-	SALEABLE		N/A	N/A	N/A	N/A
								-	10	11	-	-	14	15	-						
MX150 ASSY RCP 2X8 BK A/6	334728121	A-BLACK	GCP	PLR		M	R	-	-	3	-	-	6	7	-	SALEABLE		N/A	N/A	N/A	N/A
								9	-	11	12	13	14	15	16						
MX150 ASSY RCP 2X8 BK A/7	334728122	A-BLACK	GCP	PLR		M	R	-	-	3	-	-	6	7	-	SALEABLE		N/A	N/A	N/A	N/A
								-	-	11	12	13	14	15	16						
MX150 ASSY RCP 2X8 CPA BK A/11	334728123	A-BLACK	GCP	PLR	CPA	M	R	-	-	-	4	-	-	7	-	SALEABLE		N/A	N/A	N/A	N/A
								-	-	-	12	13	-	15	-						
MX150 ASSY RCP 2X8 BK A/8	334728124	A-BLACK	GCP	PLR		M	R	-	-	-	4	5	-	-	-	SALEABLE		N/A	N/A	N/A	N/A
								9	-	11	12	13	-	15	16						
MX150 ASSY RCP 2X8 BK A/9	334728125	A-BLACK	GCP	PLR		M	R	-	-	3	-	5	6	-	-	SALEABLE		N/A	N/A	N/A	N/A
								9	-	11	-	-	-	15	16						
MX150 ASSY RCP 2X8 BK A/10	334728126	A-BLACK	GCP	PLR		M	R	-	-	3	4	-	-	-	-	SALEABLE		N/A	N/A	N/A	N/A
								9	-	11	12	13	-	-	-						
MX150 ASSY RCP 2X8 BK A/9	334728127	A-BLACK	GCP	PLR		M	R	-	-	3	4	-	-	7	-	SALEABLE		N/A	N/A	N/A	N/A
								9	-	11	12	13	-	-	-						

molex

MX150 RECEPTACLE 2X8 SEALED ASSEMBLY MAT SEAL
BOM AND PIN OUT SHEET

ASSEMBLY DESCRIPTION	ASSEMBLY PART NUMBER	COMPONENT						BLOCKED TERMINALS								STATUS	COMMENT	OPTIONAL ATTACHMENTS SOLD SEPARATELY			
		THE PRESENCE OF AN ABBREVIATION INDICATES THE PRESENCE OF THAT COMPONENT						CAVITY WITH A NUMBER INDICATES BLOCKED TERMINAL POSITION CAVITY WITHOUT A NUMBER INDICATES OPEN TERMINAL POSITION													
		HOUSING KEY/COLOR	GROMMET CAP	PLR	CPA	MAT SEAL	RING SEAL											BACKSHELL WITH RIBS	BACKSHELL WITHOUT RIBS	90^0 ADAPTOR WITH RIBS	90^0 ADAPTOR WITHOUT RIBS
MX150 ASSY RCP 2X8 BK A/7	334728128	A-BLACK	GCP	PLR		M	R	-	-	-	4	5	-	7	-	SALEABLE		N/A	N/A	N/A	N/A
								9	-	11	12	13	-	15	16						
MX150 ASSY RCP 2X8 BK A/8	334728129	A-BLACK	GCP	PLR		M	R	-	-	3	-	5	6	7	-	SALEABLE		N/A	N/A	N/A	N/A
								9	-	11	-	-	-	15	16						
MX150 ASSY RCP 2X8 BK A/9	334728130	A-BLACK	GCP	PLR		M	R	-	-	-	4	-	6	7	8	SALEABLE		N/A	N/A	N/A	N/A
								-	10	11	12	-	-	-	-						
MX150 ASSY RCP 2X8 BK A/6	334728131	A-BLACK	GCP	PLR		M	R	1	2	3	4	-	-	7	8	SALEABLE		N/A	N/A	N/A	N/A
								9	-	-	12	-	-	15	16						
MX150 ASSY RCP 2X8 BK A/3	334728132	A-BLACK	GCP	PLR		M	R	1	2	3	4	-	6	7	8	SALEABLE		N/A	N/A	N/A	N/A
								9	10	11	12	-	-	15	16						
MX150 ASSY RCP 2X8 BK A/5	334728133	A-BLACK	GCP	PLR		M	R	1	2	3	-	-	6	7	8	SALEABLE		N/A	N/A	N/A	N/A
								-	10	11	12	-	-	15	16						
MX150 ASSY RCP 2X8 BK A/11	334728134	A-BLACK	GCP	PLR		M	R	-	-	-	4	-	-	7	8	SALEABLE		N/A	N/A	N/A	N/A
								9	-	-	12	-	-	-	-						
MX150 ASSY RCP 2X8 BK A/10	334728135	A-BLACK	GCP	PLR		M	R	-	-	-	-	-	6	7	8	SALEABLE		N/A	N/A	N/A	N/A
								-	10	11	12	-	-	-	-						
MX150 ASSY RCP 2X8 CPA BK A/13	334728136	A-BLACK	GCP	PLR	CPA	M	R	-	-	-	-	5	6	-	-	SALEABLE		N/A	N/A	N/A	N/A
								-	-	-	12	-	-	-	-						
MX150 ASSY RCP 2X8 CPA BK A/15	334728137	A-BLACK	GCP	PLR	CPA	M	R	-	-	-	-	-	-	-	-	SALEABLE		N/A	N/A	N/A	N/A
								-	-	-	12	-	-	-	-						
MX150 ASSY RCP 2X8 BK A/11	334728138	A-BLACK	GCP	PLR		M	R	1	-	-	-	-	-	-	-	SALEABLE		N/A	N/A	N/A	N/A
								9	-	11	-	-	-	15	16						
MX150 ASSY RCP 2X8 CPA BK A/7	334728139	A-BLACK	GCP	PLR	CPA	M	R	-	-	-	-	-	6	7	8	SALEABLE		N/A	N/A	N/A	N/A
								-	-	11	12	13	14	15	16						
MX150 ASSY RCP 2X8 BK A/10	334728140	A-BLACK	GCP	PLR		M	R	-	-	-	-	-	-	7	-	SALEABLE		N/A	N/A	N/A	N/A
								-	-	-	12	13	14	15	16						
MX150 ASSY RCP 2X8 CPA BK A/10	334728141	A-BLACK	GCP	PLR	CPA	M	R	-	-	-	-	-	6	-	-	SALEABLE		N/A	N/A	N/A	N/A
								-	10	-	-	13	14	15	16						
MX150 ASSY RCP 2X8 CPA BK A/8	334728142	A-BLACK	GCP	PLR	CPA	M	R	-	2	-	-	-	6	7	8	SALEABLE		N/A	N/A	N/A	N/A
								-	10	-	-	13	-	15	16						
MX150 ASSY RCP 2X8 BK A/13	334728143	A-BLACK	GCP	PLR		M	R	1	-	-	-	-	-	-	-	SALEABLE		N/A	N/A	N/A	N/A
								-	-	-	-	-	-	15	16						
MX150 ASSY RCP 2X8 BK A/14	334728144	A-BLACK	GCP	PLR		M	R	-	-	-	-	-	-	-	-	SALEABLE		N/A	N/A	N/A	N/A
								-	-	11	-	13	-	-	-						
MX150 ASSY RCP 2X8 BK A/2	334728145	A-BLACK	GCP	PLR		M	R	1	2	3	4	5	-	-	8	SALEABLE		N/A	N/A	N/A	N/A
								9	10	11	12	13	14	15	16						
MX150 ASSY RCP 2X8 BK A/13	334728146	A-BLACK	GCP	PLR		M	R	-	2	-	-	-	-	-	-	SALEABLE		N/A	N/A	N/A	N/A
								-	10	-	-	-	14	-	-						
MX150 ASSY RCP 2X8 BK A/11	334728147	A-BLACK	GCP	PLR		M	R	-	2	3	-	-	-	-	-	SALEABLE		N/A	N/A	N/A	N/A
								-	10	11	-	-	14	-	-						
MX150 ASSY RCP 2X8 BK A/8	334728148	A-BLACK	GCP	PLR		M	R	1	2	3	-	-	-	-	8	SALEABLE		N/A	N/A	N/A	N/A
								-	10	11	-	-	14	-	16						
MX150 ASSY RCP 2X8 BK A/9	334728149	A-BLACK	GCP	PLR		M	R	-	-	-	4	5	-	-	8	SALEABLE		N/A	N/A	N/A	N/A
								-	-	-	12	13	14	15	-						
MX150 ASSY RCP 2X8 BK A/5	334728150	A-BLACK	GCP	PLR		M	R	-	2	-	4	5	6	7	-	SALEABLE		N/A	N/A	N/A	N/A
								9	10	11	12	-	14	-	16						
MX150 ASSY RCP 2X8 CPA DG C/15	334728151	C-DARK GRAY	GCP	PLR	CPA	M	R	1	-	-	-	-	-	-	-	SALEABLE		N/A	N/A	N/A	N/A
								-	-	-	-	-	-	-	-						
MX150 ASSY RCP 2X8 SG D/15	334728152	D-STONE GRAY	GCP	PLR		M	R	1	-	-	-	-	-	-	-	SALEABLE		N/A	N/A	N/A	N/A
								-	-	-	-	-	-	-	-						
MX150 ASSY RCP 2X8 DG C/15	334728153	C-DARK GRAY	GCP	PLR		M	R	1	-	-	-	-	-	-	-	SALEABLE		N/A	N/A	N/A	N/A
								-	-	-	-	-	-	-	-						
MX150 ASSY RCP 2X8 CPA SG D/15	334728154	D-STONE GRAY	GCP	PLR	CPA	M	R	1	-	-	-	-	-	-	-	SALEABLE		N/A	N/A	N/A	N/A
								-	-	-	-	-	-	-	-						

molex

MX150 RECEPTACLE 2X8 SEALED ASSEMBLY MAT SEAL
BOM AND PIN OUT SHEET

ASSEMBLY DESCRIPTION	ASSEMBLY PART NUMBER	COMPONENT						BLOCKED TERMINALS								STATUS	COMMENT	OPTIONAL ATTACHMENTS SOLD SEPARATELY			
		THE PRESENCE OF AN ABBREVIATION INDICATES THE PRESENCE OF THAT COMPONENT						CAVITY WITH A NUMBER INDICATES BLOCKED TERMINAL POSITION CAVITY WITHOUT A NUMBER INDICATES OPEN TERMINAL POSITION													
		HOUSING KEY/COLOR	GROMMET CAP	PLR	CPA	MAT SEAL	RING SEAL											BACKSHELL WITH RIBS	BACKSHELL WITHOUT RIBS	90^0 ADAPTOR WITH RIBS	90^0 ADAPTOR WITHOUT RIBS
MX150 ASSY RCP 2X8 BK A/9	334728155	A-BLACK	GCP	PLR		M	R	1	-	3	-	-	6	7	8	SALEABLE		N/A	N/A	N/A	N/A
								-	-	-	-	-	-	15	16						
MX150 ASSY RCP 2X8 BK A/6	334728156	A-BLACK	GCP	PLR		M	R	-	-	3	4	-	6	-	8	SALEABLE		N/A	N/A	N/A	N/A
								9	10	11	12	-	-	15	16						
MX150 ASSY RCP 2X8 BK A/8	334728157	A-BLACK	GCP	PLR		M	R	-	-	3	4	-	-	-	-	SALEABLE		N/A	N/A	N/A	N/A
								9	10	11	12	-	-	15	16						
MX150 ASSY RCP 2X8 BK A/9	334728158	A-BLACK	GCP	PLR		M	R	-	-	-	4	5	-	7	-	SALEABLE		N/A	N/A	N/A	N/A
								-	10	-	-	13	14	-	16						
MX150 ASSY RCP 2X8 BK A/14	334728159	A-BLACK	GCP	PLR		M	R	-	-	-	-	5	-	-	-	SALEABLE		N/A	N/A	N/A	N/A
								-	-	-	-	-	14	-	-						
MX150 ASSY RCP 2X8 BK A/13	334728160	A-BLACK	GCP	PLR		M	R	-	-	-	4	5	-	-	-	SALEABLE		N/A	N/A	N/A	N/A
								-	-	-	-	-	14	-	-						
MX150 ASSY RCP 2X8 BK A/2	334728161	A-BLACK	GCP	PLR		M	R	1	2	3	4	5	-	7	8	SALEABLE		N/A	N/A	N/A	N/A
								9	10	11	12	13	14	15	-						
MX150 ASSY RCP 2X8 BK A/12	334728162	A-BLACK	GCP	PLR		M	R	-	2	-	-	-	-	7	-	SALEABLE		N/A	N/A	N/A	N/A
								-	10	-	-	-	14	-	-						
MX150 ASSY RCP 2X8 BK A/10	334728163	A-BLACK	GCP	PLR		M	R	1	2	-	-	-	-	7	8	SALEABLE		N/A	N/A	N/A	N/A
								-	10	-	-	-	14	-	-						
MX150 ASSY RCP 2X8 BK A/10	334728164	A-BLACK	GCP	PLR		M	R	-	2	3	-	-	-	7	-	SALEABLE		N/A	N/A	N/A	N/A
								-	10	11	-	-	14	-	-						
MX150 ASSY RCP 2X8 BK A/6	334728165	A-BLACK	GCP	PLR		M	R	1	2	3	4	-	-	7	8	SALEABLE		N/A	N/A	N/A	N/A
								-	10	11	12	-	14	-	-						
MX150 ASSY RCP 2X8 BK A/4	334728166	A-BLACK	GCP	PLR		M	R	-	2	3	4	5	-	7	-	SALEABLE		N/A	N/A	N/A	N/A
								9	10	11	12	13	14	15	-						
MX150 ASSY RCP 2X8 BK A/5	334728167	A-BLACK	GCP	PLR		M	R	-	2	3	-	5	6	7	-	SALEABLE		N/A	N/A	N/A	N/A
								9	-	11	-	13	14	15	16						
MX150 ASSY RCP 2X8 BK A/10	334728168	A-BLACK	GCP	PLR		M	R	-	-	-	4	-	6	-	8	SALEABLE		N/A	N/A	N/A	N/A
								-	-	11	-	13	-	15	-						
MX150 ASSY RCP 2X8 BK A/8	334728169	A-BLACK	GCP	PLR		M	R	1	2	3	-	-	-	7	8	SALEABLE		N/A	N/A	N/A	N/A
								-	10	11	-	-	14	-	-						
MX150 ASSY RCP 2X8 BK A/7	334728170	A-BLACK	GCP	PLR		M	R	-	2	-	-	5	6	7	-	SALEABLE		N/A	N/A	N/A	N/A
								9	10	-	12	13	-	-	16						
MX150 ASSY RCP 2X8 BK A/6	334728171	A-BLACK	GCP	PLR		M	R	-	2	-	4	5	-	-	-	SALEABLE		N/A	N/A	N/A	N/A
								9	-	11	12	13	14	15	16						
MX150 ASSY RCP 2X8 BK A/11	334728172	A-BLACK	GCP	PLR		M	R	-	-	-	4	-	6	-	-	SALEABLE		N/A	N/A	N/A	N/A
								-	-	11	12	13	-	-	-						
MX150 ASSY RCP 2X8 BK A/13	334728173	A-BLACK	GCP	PLR		M	R	-	-	-	-	-	-	-	-	SALEABLE		N/A	N/A	N/A	N/A
								-	10	11	-	-	-	-	16						
MX150 ASSY RCP 2X8 BK A/11	334728174	A-BLACK	GCP	PLR		M	R	-	-	-	-	-	6	7	-	SALEABLE		N/A	N/A	N/A	N/A
								-	10	11	-	-	14	-	-						
MX150 ASSY RCP 2X8 BK A/10	334728175	A-BLACK	GCP	PLR		M	R	-	-	-	-	-	6	7	-	SALEABLE		N/A	N/A	N/A	N/A
								9	10	11	-	-	14	-	-						
MX150 ASSY RCP 2X8 CPA BK A/9	334728176	A-BLACK	GCP	PLR	CPA	M	R	-	-	-	4	5	-	-	8	SALEABLE		N/A	N/A	N/A	N/A
								-	-	-	12	13	14	15	-						
MX150 ASSY RCP 2X8 CPA BK A/10	334728177	A-BLACK	GCP	PLR	CPA	M	R	-	2	3	4	-	-	-	-	SALEABLE		N/A	N/A	N/A	N/A
								-	10	11	12	-	-	-	-						
MX150 ASSY RCP 2X8 BK A/14	334728178	A-BLACK	GCP	PLR		M	R	-	-	-	-	-	-	-	-	SALEABLE		N/A	N/A	N/A	N/A
								-	10	-	-	13	-	-	-						
MX150 ASSY RCP 2X8 BK A/13	334728179	A-BLACK	GCP	PLR		M	R	-	-	-	-	-	-	-	8	SALEABLE		N/A	N/A	N/A	N/A
								-	-	-	-	13	14	-	-						
MX150 ASSY RCP 2X8 BK A/10	334728180	A-BLACK	GCP	PLR		M	R	-	-	-	4	-	6	-	-	SALEABLE		N/A	N/A	N/A	N/A
								9	-	11	12	13	-	-	-						
MX150 ASSY RCP 2X8 BK A/11	334728181	A-BLACK	GCP	PLR		M	R	-	-	-	4	-	6	-	-	SALEABLE		N/A	N/A	N/A	N/A
								9	-	11	12	-	-	-	-						

molex

MX150 RECEPTACLE 2X8 SEALED ASSEMBLY MAT SEAL
BOM AND PIN OUT SHEET

ASSEMBLY DESCRIPTION	ASSEMBLY PART NUMBER	COMPONENT						BLOCKED TERMINALS								STATUS	COMMENT	OPTIONAL ATTACHMENTS SOLD SEPARATELY			
		THE PRESENCE OF AN ABBREVIATION INDICATES THE PRESENCE OF THAT COMPONENT						CAVITY WITH A NUMBER INDICATES BLOCKED TERMINAL POSITION CAVITY WITHOUT A NUMBER INDICATES OPEN TERMINAL POSITION													
		HOUSING KEY/COLOR	GROMMET CAP	PLR	CPA	MAT SEAL	RING SEAL											BACKSHELL WITH RIBS	BACKSHELL WITHOUT RIBS	90^0 ADAPTOR WITH RIBS	90^0 ADAPTOR WITHOUT RIBS
MX150 ASSY RCP 2X8 BK A/9	334728182	A-BLACK	GCP	PLR		M	R	-	-	-	4	-	6	-	-	SALEABLE		N/A	N/A	N/A	N/A
								-	-	11	12	13	14	-	16						
MX150 ASSY RCP 2X8 BK A/8	334728183	A-BLACK	GCP	PLR		M	R	-	-	-	-	5	-	7	8	SALEABLE		N/A	N/A	N/A	N/A
								-	-	11	12	13	14	-	16						
MX150 ASSY RCP 2X8 LG B/7	334728184	B-LIGHT GRAY	GCP	PLR		M	R	1	2	3	4	5	6	7	8	SALEABLE		N/A	N/A	N/A	N/A
								-	-	-	-	-	-	-	16						
MX150 ASSY RCP 2X8 LG B/6	334728185	B-LIGHT GRAY	GCP	PLR		M	R	1	2	3	4	5	6	7	8	SALEABLE		N/A	N/A	N/A	N/A
								-	-	-	-	-	-	15	16						
MX150 ASSY RCP 2X8 BK A/8	334728186	A-BLACK	GCP	PLR		M	R	-	-	3	4	-	6	-	-	SALEABLE		N/A	N/A	N/A	N/A
								9	10	11	-	-	14	-	16						
MX150 ASSY RCP 2X8 BK A/14	334728187	A-BLACK	GCP	PLR		M	R	-	-	-	-	-	-	-	-	SALEABLE		N/A	N/A	N/A	N/A
								9	10	-	-	-	-	-	-						
MX150 ASSY RCP 2X8 BK A/4	334728188	A-BLACK	GCP	PLR		M	R	-	-	3	4	5	6	-	-	SALEABLE		N/A	N/A	N/A	N/A
								9	10	11	12	13	14	15	16						
MX150 ASSY RCP 2X8 LG B/14	334728189	B-LIGHT GRAY	GCP	PLR		M	R	-	-	-	-	-	-	-	-	SALEABLE		N/A	N/A	N/A	N/A
								9	10	-	-	-	-	-	-						
MX150 ASSY RCP 2X8 BK A/10	334728190	A-BLACK	GCP	PLR		M	R	-	2	-	-	-	6	-	-	SALEABLE		N/A	N/A	N/A	N/A
								-	-	-	-	13	14	15	16						
MX150 ASSY RCP 2X8 LG B/3	334728191	B-LIGHT GRAY	GCP	PLR		M	R	1	2	3	4	5	6	7	8	SALEABLE		N/A	N/A	N/A	N/A
								9	10	11	12	13	-	-	-						
MX150 ASSY RCP 2X8 LG B/2	334728192	B-LIGHT GRAY	GCP	PLR		M	R	1	2	3	4	5	6	7	8	SALEABLE		N/A	N/A	N/A	N/A
								9	10	11	-	-	14	15	16						
MX150 ASSY RCP 2X8 BK A/7	334728193	A-BLACK	GCP	PLR		M	R	1	2	3	4	5	6	7	8	SALEABLE		N/A	N/A	N/A	N/A
								-	-	-	-	-	-	-	16						
MX150 ASSY RCP 2X8 CPA BK A/8	334728194	A-BLACK	GCP	PLR	CPA	M	R	-	-	-	-	-	6	7	-	SALEABLE		N/A	N/A	N/A	N/A
								-	10	11	12	13	14	15	-						
MX150 ASSY RCP 2X8 BK A/8	334728195	A-BLACK	GCP	PLR		M	R	-	-	-	-	-	-	7	8	SALEABLE		N/A	N/A	N/A	N/A
								9	10	-	-	13	14	15	16						
MX150 ASSY RCP 2X8 BK A/13	334728196	A-BLACK	GCP	PLR		M	R	-	-	-	4	-	-	7	-	SALEABLE		N/A	N/A	N/A	N/A
								-	-	-	-	-	-	-	16						
MX150 ASSY RCP 2X8 BK A/9	334728197	A-BLACK	GCP	PLR		M	R	1	2	3	4	5	6	-	-	SALEABLE		N/A	N/A	N/A	N/A
								-	-	-	12	-	-	-	-						
MX150 ASSY RCP 2X8 BK A/11	334728198	A-BLACK	GCP	PLR		M	R	-	2	-	4	5	-	-	-	SALEABLE		N/A	N/A	N/A	N/A
								9	-	-	-	-	-	-	16						
MX150 ASSY RCP 2X8 BK A/7	334728199	A-BLACK	GCP	PLR		M	R	-	2	3	4	5	6	-	-	SALEABLE		N/A	N/A	N/A	N/A
								-	-	11	-	-	14	15	16						
MX150 ASSY RCP 2X8 BK A/9	334728200	A-BLACK	GCP	PLR		M	R	1	-	-	-	-	-	-	8	SALEABLE		N/A	N/A	N/A	N/A
								-	-	11	12	13	-	15	16						
MX150 ASSY RCP 2X8 BK A/6	334728201	A-BLACK	GCP	PLR		M	R	1	-	-	-	-	6	-	8	SALEABLE		N/A	N/A	N/A	N/A
								9	10	11	12	13	-	15	16						
MX150 ASSY RCP 2X8 BK A/7	334728202	A-BLACK	GCP	PLR		M	R	1	-	-	-	-	-	-	8	SALEABLE		N/A	N/A	N/A	N/A
								9	10	11	12	13	-	15	16						
MX150 ASSY RCP 2X8 BK A/12	334728203	A-BLACK	GCP	PLR		M	R	-	-	-	-	5	6	7	-	SALEABLE		N/A	N/A	N/A	N/A
								-	-	-	-	-	-	15	-						
MX150 ASSY RCP 2X8 BK A/10	334728204	A-BLACK	GCP	PLR		M	R	-	-	-	4	-	6	7	8	SALEABLE		N/A	N/A	N/A	N/A
								9	10	-	-	-	-	-	-						
MX150 ASSY RCP 2X8 BK A/12	334728205	A-BLACK	GCP	PLR		M	R	-	-	-	-	-	6	7	8	SALEABLE		N/A	N/A	N/A	N/A
								-	10	-	-	-	-	-	-						
MX150 ASSY RCP 2X8 BK A/6	334728206	A-BLACK	GCP	PLR		M	R	-	-	3	4	5	6	7	8	SALEABLE		N/A	N/A	N/A	N/A
								9	10	11	-	-	-	-	16						
MX150 ASSY RCP 2X8 BK A/9	334728207	A-BLACK	GCP	PLR		M	R	1	-	-	-	-	-	-	8	SALEABLE		N/A	N/A	N/A	N/A
								-	-	11	12	13	14	15	-						
MX150 ASSY RCP 2X8 BK A/8	334728209	A-BLACK	GCP	PLR		M	R	-	-	-	4	-	-	7	8	SALEABLE		N/A	N/A	N/A	N/A
								-	-	11	12	13	14	-	16						

molex

MX150 RECEPTACLE 2X8 SEALED ASSEMBLY MAT SEAL
BOM AND PIN OUT SHEET

ASSEMBLY DESCRIPTION	ASSEMBLY PART NUMBER	COMPONENT						BLOCKED TERMINALS								STATUS	COMMENT	OPTIONAL ATTACHMENTS SOLD SEPARATELY			
		THE PRESENCE OF AN ABBREVIATION INDICATES THE PRESENCE OF THAT COMPONENT						CAVITY WITH A NUMBER INDICATES BLOCKED TERMINAL POSITION CAVITY WITHOUT A NUMBER INDICATES OPEN TERMINAL POSITION													
		HOUSING KEY/COLOR	GROMMET CAP	PLR	CPA	MAT SEAL	RING SEAL											BACKSHELL WITH RIBS	BACKSHELL WITHOUT RIBS	90^0 ADAPTOR WITH RIBS	90^0 ADAPTOR WITHOUT RIBS
MX150 ASSY RCP 2X8 BK A/9	334728210	A-BLACK	GCP	PLR		M	R	-	-	-	4	-	6	7	-	SALEABLE		N/A	N/A	N/A	N/A
								-	-	11	12	13	-	-	16						
MX150 ASSY RCP 2X8 BK A/6	334728211	A-BLACK	GCP	PLR		M	R	-	-	3	4	5	-	7	-	SALEABLE		N/A	N/A	N/A	N/A
								9	-	11	12	13	-	15	16						
MX150 ASSY RCP 2X8 LG B/4	334728212	B-LIGHT GRAY	GCP	PLR		M	R	1	2	3	4	5	6	7	8	SALEABLE		N/A	N/A	N/A	N/A
								9	10	-	12	13	-	-	-						
MX150 ASSY RCP 2X8 LG B/1	334728213	B-LIGHT GRAY	GCP	PLR		M	R	1	2	3	4	5	6	7	8	SALEABLE		N/A	N/A	N/A	N/A
								9	10	-	12	13	14	15	16						
MX150 ASSY RCP 2X8 BK A/9	334728214	A-BLACK	GCP	PLR		M	R	1	-	-	-	-	6	-	-	SALEABLE		N/A	N/A	N/A	N/A
								9	-	11	12	-	-	15	16						
MX150 ASSY RCP 2X8 BK A/12	334728215	A-BLACK	GCP	PLR		M	R	1	-	-	-	-	6	-	-	SALEABLE		N/A	N/A	N/A	N/A
								9	-	-	-	-	-	15	-						
MX150 ASSY RCP 2X8 BK A/12	334728216	A-BLACK	GCP	PLR		M	R	-	2	3	-	-	-	7	8	SALEABLE		N/A	N/A	N/A	N/A
								-	-	-	-	-	-	-	-						
MX150 ASSY RCP 2X8 BK A/8	334728217	A-BLACK	GCP	PLR		M	R	-	-	-	4	5	6	-	-	SALEABLE		N/A	N/A	N/A	N/A
								-	10	11	12	-	14	15	-						
MX150 ASSY RCP 2X8 BK A/9	334728218	A-BLACK	GCP	PLR		M	R	-	-	-	-	-	6	-	8	SALEABLE		N/A	N/A	N/A	N/A
								9	10	11	12	-	-	-	16						
MX150 ASSY RCP 2X8 CPA BK A/2	334728219	A-BLACK	GCP	PLR	CPA	M	R	-	2	3	4	5	6	-	8	SALEABLE		N/A	N/A	N/A	N/A
								9	10	11	12	13	14	15	16						
MX150 ASSY RCP 2X8 CPA BK A/7	334728220	A-BLACK	GCP	PLR	CPA	M	R	-	-	-	-	5	6	7	-	SALEABLE		N/A	N/A	N/A	N/A
								-	10	11	12	13	14	15	-						
MX150 ASSY RCP 2X8 CPA BK A/8	334728221	A-BLACK	GCP	PLR	CPA	M	R	-	2	3	-	-	-	7	8	SALEABLE		N/A	N/A	N/A	N/A
								-	-	-	12	-	14	15	16						
MX150 ASSY RCP 2X8 CPA BK A/9	334728222	A-BLACK	GCP	PLR	CPA	M	R	1	-	3	4	-	-	7	-	SALEABLE		N/A	N/A	N/A	N/A
								-	-	-	-	-	14	15	16						
MX150 ASSY RCP 2X8 CPA BK A/9	334728223	A-BLACK	GCP	PLR	CPA	M	R	1	-	3	4	-	-	-	8	SALEABLE		N/A	N/A	N/A	N/A
								-	-	-	-	-	14	15	16						
MX150 ASSY RCP 2X8 CPA BK A/10	334728224	A-BLACK	GCP	PLR	CPA	M	R	1	-	-	-	-	-	-	-	SALEABLE		N/A	N/A	N/A	N/A
								-	-	11	12	13	-	15	16						
MX150 ASSY RCP 2X8 CPA BK A/13	334728225	A-BLACK	GCP	PLR	CPA	M	R	1	-	-	-	5	-	-	-	SALEABLE		N/A	N/A	N/A	N/A
								-	-	-	-	-	-	-	16						
MX150 ASSY RCP 2X8 CPA BK A/11	334728226	A-BLACK	GCP	PLR	CPA	M	R	1	2	-	-	-	-	-	-	SALEABLE		N/A	N/A	N/A	N/A
								-	-	11	12	-	-	15	-						
MX150 ASSY RCP 2X8 CPA BK A/5	334728227	A-BLACK	GCP	PLR	CPA	M	R	1	2	3	4	5	6	7	8	SALEABLE		N/A	N/A	N/A	N/A
								-	-	-	-	-	14	15	16						
MX150 ASSY RCP 2X8 CPA BK A/9	334728228	A-BLACK	GCP	PLR	CPA	M	R	-	-	-	-	-	6	-	8	SALEABLE		N/A	N/A	N/A	N/A
								9	10	11	12	-	-	-	16						
MX150 ASSY RCP 2X8 CPA BK A/10	334728229	A-BLACK	GCP	PLR	CPA	M	R	-	-	-	-	-	6	-	-	SALEABLE		N/A	N/A	N/A	N/A
								9	10	11	12	-	-	-	16						
MX150 ASSY RCP 2X8 CPA BK A/13	334728230	A-BLACK	GCP	PLR	CPA	M	R	-	-	-	-	-	-	7	-	SALEABLE		N/A	N/A	N/A	N/A
								-	-	-	-	13	-	15	-						
MX150 ASSY RCP 2X8 CPA BK A/7	334728231	A-BLACK	GCP	PLR	CPA	M	R	-	2	3	-	-	-	7	8	SALEABLE		N/A	N/A	N/A	N/A
								-	-	11	12	13	-	15	16						
MX150 ASSY RCP 2X8 CPA BK A/13	334728232	A-BLACK	GCP	PLR	CPA	M	R	-	-	-	-	-	-	7	-	SALEABLE		N/A	N/A	N/A	N/A
								-	-	-	-	-	-	15	16						
MX150 ASSY RCP 2X8 CPA BK A/12	334728233	A-BLACK	GCP	PLR	CPA	M	R	-	2	3	-	-	-	-	-	SALEABLE		N/A	N/A	N/A	N/A
								-	-	11	-	-	-	15	-						
MX150 ASSY RCP 2X8 CPA BK A/13	334728234	A-BLACK	GCP	PLR	CPA	M	R	-	-	-	-	-	-	-	-	SALEABLE		N/A	N/A	N/A	N/A
								9	-	-	12	-	-	-	16						
MX150 ASSY RCP 2X8 CPA BK A/6	334728235	A-BLACK	GCP	PLR	CPA	M	R	1	2	3	-	-	-	7	8	SALEABLE		N/A	N/A	N/A	N/A
								-	-	11	-	13	14	15	16						
MX150 ASSY RCP 2X8 CPA BK A/3	334728236	A-BLACK	GCP	PLR	CPA	M	R	1	2	3	4	5	6	7	-	SALEABLE		N/A	N/A	N/A	N/A
								9	10	11	12	13	14	-	-						

molex

MX150 RECEPTACLE 2X8 SEALED ASSEMBLY MAT SEAL
BOM AND PIN OUT SHEET

ASSEMBLY DESCRIPTION	ASSEMBLY PART NUMBER	COMPONENT						BLOCKED TERMINALS								STATUS	COMMENT	OPTIONAL ATTACHMENTS SOLD SEPARATELY			
		THE PRESENCE OF AN ABBREVIATION INDICATES THE PRESENCE OF THAT COMPONENT						CAVITY WITH A NUMBER INDICATES BLOCKED TERMINAL POSITION CAVITY WITHOUT A NUMBER INDICATES OPEN TERMINAL POSITION													
		HOUSING KEY/COLOR	GROMMET CAP	PLR	CPA	MAT SEAL	RING SEAL											BACKSHELL WITH RIBS	BACKSHELL WITHOUT RIBS	90^0 ADAPTOR WITH RIBS	90^0 ADAPTOR WITHOUT RIBS
MX150 ASSY RCP 2X8 CPA BK A/7	334728237	A-BLACK	GCP	PLR	CPA	M	R	-	-	3	4	5	6	7	-	SALEABLE		N/A	N/A	N/A	N/A
								-	-	11	12	13	14	-	-						
MX150 ASSY RCP 2X8 BK A/13	334728238	A-BLACK	GCP	PLR		M	R	-	-	-	-	-	-	-	-	SALEABLE		N/A	N/A	N/A	N/A
								-	-	11	12	13	-	-	-						
MX150 ASSY RCP 2X8 CPA BK A/11	334728239	A-BLACK	GCP	PLR	CPA	M	R	-	-	-	-	-	6	-	-	SALEABLE		N/A	N/A	N/A	N/A
								9	10	11	12	-	-	-	-						
MX150 ASSY RCP 2X8 BK A/8	334728240	A-BLACK	GCP	PLR		M	R	1	-	-	-	-	-	-	8	SALEABLE		N/A	N/A	N/A	N/A
								-	-	11	12	13	14	15	16						
MX150 ASSY RCP 2X8 CPA LG B/11	334728241	B-LIGHT GRAY	GCP	PLR	CPA	M	R	-	-	-	-	-	6	7	8	SALEABLE		N/A	N/A	N/A	N/A
								-	-	11	-	13	-	-	-						
MX150 ASSY RCP 2X8 BK A/8	334728242	A-BLACK	GCP	PLR		M	R	1	2	-	-	-	-	-	-	SALEABLE		N/A	N/A	N/A	N/A
								-	-	11	12	13	14	15	16						
MX150 ASSY RCP 2X8 BK A/8	334728243	A-BLACK	GCP	PLR		M	R	-	2	3	-	5	6	7	-	SALEABLE		N/A	N/A	N/A	N/A
								-	-	11	-	13	-	15	-						
MX150 ASSY RCP 2X8 CPA BK A/10	334728244	A-BLACK	GCP	PLR	CPA	M	R	-	2	-	-	-	6	-	8	SALEABLE		N/A	N/A	N/A	N/A
								9	10	-	-	-	-	-	16						
MX150 ASSY RCP 2X8 BK A/11	334728245	A-BLACK	GCP	PLR		M	R	-	-	-	-	-	6	-	-	SALEABLE		N/A	N/A	N/A	N/A
								-	-	11	-	13	14	15	-						
MX150 ASSY RCP 2X8 CPA BK A/14	334728246	A-BLACK	GCP	PLR	CPA	M	R	-	-	-	-	-	-	-	-	SALEABLE		N/A	N/A	N/A	N/A
								-	10	-	-	13	-	-	-						
MX150 ASSY RCP 2X8 BK A/7	334728247	A-BLACK	GCP	PLR		M	R	1	2	-	-	-	-	-	8	SALEABLE		N/A	N/A	N/A	N/A
								-	-	11	12	13	14	15	16						
MX150 ASSY RCP 2X8 BK A/12	334728248	A-BLACK	GCP	PLR		M	R	-	-	-	-	-	-	-	-	SALEABLE		N/A	N/A	N/A	N/A
								-	-	-	12	13	14	15	-						
MX150 ASSY RCP 2X8 BK A/10	334728249	A-BLACK	GCP	PLR		M	R	1	-	-	-	-	-	-	8	SALEABLE		N/A	N/A	N/A	N/A
								-	-	-	12	13	14	15	-						
MX150 ASSY RCP 2X8 BK A/8	334728250	A-BLACK	GCP	PLR		M	R	1	-	3	-	-	-	-	8	SALEABLE		N/A	N/A	N/A	N/A
								9	-	-	12	13	14	15	-						
MX150 ASSY RCP 2X8 BK A/4	334728251	A-BLACK	GCP	PLR		M	R	-	2	3	4	5	6	7	-	SALEABLE		N/A	N/A	N/A	N/A
								9	10	-	12	13	14	15	-						
MX150 ASSY RCP 2X8 CPA BK A/12	334728252	A-BLACK	GCP	PLR	CPA	M	R	-	-	-	-	5	6	-	-	SALEABLE		N/A	N/A	N/A	N/A
								9	-	-	-	-	-	-	16						
MX150 ASSY RCP 2X8 BK A/11	334728253	A-BLACK	GCP	PLR		M	R	-	-	3	-	-	-	-	-	SALEABLE		N/A	N/A	N/A	N/A
								9	-	-	-	13	14	15	-						
MX150 ASSY RCP 2X8 BK A/8	334728254	A-BLACK	GCP	PLR		M	R	1	-	3	-	-	-	-	8	SALEABLE		N/A	N/A	N/A	N/A
								9	-	-	-	13	14	15	16						
MX150 ASSY RCP 2X8 CPA BK A/12	334728255	A-BLACK	GCP	PLR	CPA	M	R	1	-	-	-	-	-	-	-	SALEABLE		N/A	N/A	N/A	N/A
								9	-	-	-	13	-	-	16						
MX150 ASSY RCP 2X8 CPA BK A/10	334728256	A-BLACK	GCP	PLR	CPA	M	R	-	-	-	4	-	6	7	8	SALEABLE		N/A	N/A	N/A	N/A
								9	10	-	-	-	-	-	-						
MX150 ASSY RCP 2X8 CPA BK A/11	334728257	A-BLACK	GCP	PLR	CPA	M	R	-	-	-	-	-	6	7	8	SALEABLE		N/A	N/A	N/A	N/A
								9	10	-	-	-	-	-	-						
MX150 ASSY RCP 2X8 CPA BK A/9	334728258	A-BLACK	GCP	PLR	CPA	M	R	1	-	3	-	-	6	7	8	SALEABLE		N/A	N/A	N/A	N/A
								-	-	-	-	-	-	15	16						
MX150 ASSY RCP 2X8 CPA BK A/13	334728259	A-BLACK	GCP	PLR	CPA	M	R	-	-	-	-	-	-	-	8	SALEABLE		N/A	N/A	N/A	N/A
								-	-	-	-	13	14	-	-						
MX150 ASSY RCP 2X8 CPA BK A/15	334728260	A-BLACK	GCP	PLR	CPA	M	R	-	-	3	-	-	-	-	-	SALEABLE		N/A	N/A	N/A	N/A
								-	-	-	-	-	-	-	-						
MX150 ASSY RCP 2X8 BK A/10	334728261	A-BLACK	GCP	PLR		M	R	-	-	3	-	-	-	-	-	SALEABLE		N/A	N/A	N/A	N/A
								9	-	-	12	13	14	15	-						
MX150 ASSY RCP 2X8 CPA BK A/14	334728262	A-BLACK	GCP	PLR	CPA	M	R	-	2	-	-	-	-	-	-	SALEABLE		N/A	N/A	N/A	N/A
								-	-	-	-	-	-	15	-						
MX150 ASSY RCP 2X8 CPA BK A/9	334728263	A-BLACK	GCP	PLR	CPA	M	R	-	-	-	4	-	6	7	-	SALEABLE		N/A	N/A	N/A	N/A
								-	-	11	12	13	-	-	16						

molex

MX150 RECEPTACLE 2X8 SEALED ASSEMBLY MAT SEAL
BOM AND PIN OUT SHEET

ASSEMBLY DESCRIPTION	ASSEMBLY PART NUMBER	COMPONENT						BLOCKED TERMINALS								STATUS	COMMENT	OPTIONAL ATTACHMENTS SOLD SEPARATELY			
		THE PRESENCE OF AN ABBREVIATION INDICATES THE PRESENCE OF THAT COMPONENT						CAVITY WITH A NUMBER INDICATES BLOCKED TERMINAL POSITION CAVITY WITHOUT A NUMBER INDICATES OPEN TERMINAL POSITION													
		HOUSING KEY/COLOR	GROMMET CAP	PLR	CPA	MAT SEAL	RING SEAL											BACKSHELL WITH RIBS	BACKSHELL WITHOUT RIBS	90^0 ADAPTOR WITH RIBS	90^0 ADAPTOR WITHOUT RIBS
MX150 ASSY RCP 2X8 CPA BK A/6	334728264	A-BLACK	GCP	PLR	CPA	M	R	-	-	3	4	5	-	7	-	SALEABLE		N/A	N/A	N/A	N/A
								9	-	11	12	13	-	15	16						
MX150 ASSY RCP 2X8 CPA LG B/2	334728265	B-LIGHT GRAY	GCP	PLR	CPA	M	R	1	2	3	4	5	6	7	8	SALEABLE		N/A	N/A	N/A	N/A
								9	10	11	-	-	14	15	16						
MX150 ASSY RCP 2X8 CPA LG B/14	334728266	B-LIGHT GRAY	GCP	PLR	CPA	M	R	-	-	-	-	-	-	-	-	SALEABLE		N/A	N/A	N/A	N/A
								-	-	-	12	13	-	-	-						
MX150 ASSY RCP 2X8 CPA LG B/4	334728267	B-LIGHT GRAY	GCP	PLR	CPA	M	R	1	2	-	4	5	6	7	-	SALEABLE		N/A	N/A	N/A	N/A
								9	10	11	-	-	14	15	16						
MX150 ASSY RCP 2X8 CPA LG B/10	334728268	B-LIGHT GRAY	GCP	PLR	CPA	M	R	-	2	-	4	5	6	-	-	SALEABLE		N/A	N/A	N/A	N/A
								-	-	-	12	13	-	-	-						
MX150 ASSY RCP 2X8 CPA BK A/12	334728269	A-BLACK	GCP	PLR	CPA	M	R	-	-	-	-	5	6	-	-	SALEABLE		N/A	N/A	N/A	N/A
								-	-	-	-	-	-	15	16						
MX150 ASSY RCP 2X8 CPA BK A/14	334728270	A-BLACK	GCP	PLR	CPA	M	R	-	-	-	-	-	-	-	-	SALEABLE		N/A	N/A	N/A	N/A
								-	-	-	12	13	-	-	-						
MX150 ASSY RCP 2X8 BK A/8	334728271	A-BLACK	GCP	PLR		M	R	-	-	-	-	-	-	-	8	SALEABLE		N/A	N/A	N/A	N/A
								-	10	11	12	13	14	15	16						
MX150 ASSY RCP 2X8 BK A/5	334728272	A-BLACK	GCP	PLR		M	R	-	2	-	4	5	-	-	8	SALEABLE		N/A	N/A	N/A	N/A
								-	10	11	12	13	14	15	16						
MX150 ASSY RCP 2X8 BK A/10	334728273	A-BLACK	GCP	PLR		M	R	-	-	-	-	-	6	-	-	SALEABLE		N/A	N/A	N/A	N/A
								-	-	11	-	13	14	15	16						
MX150 ASSY RCP 2X8 BK A/7	334728274	A-BLACK	GCP	PLR		M	R	-	-	-	-	5	6	7	-	SALEABLE		N/A	N/A	N/A	N/A
								9	10	11	-	13	14	15	-						
MX150 ASSY RCP 2X8 BK A/8	334728275	A-BLACK	GCP	PLR		M	R	-	-	3	-	-	6	-	-	SALEABLE		N/A	N/A	N/A	N/A
								9	-	11	-	13	14	15	16						
MX150 ASSY RCP 2X8 BK A/8	334728276	A-BLACK	GCP	PLR		M	R	-	2	-	4	5	-	-	8	SALEABLE		N/A	N/A	N/A	N/A
								-	-	-	-	13	14	15	16						
MX150 ASSY RCP 2X8 BK A/10	334728277	A-BLACK	GCP	PLR		M	R	-	-	-	-	-	-	-	-	SALEABLE		N/A	N/A	N/A	N/A
								9	-	11	12	13	14	15	-						
MX150 ASSY RCP 2X8 CPA BK A/12	334728278	A-BLACK	GCP	PLR	CPA	M	R	-	-	-	-	-	6	7	8	SALEABLE		N/A	N/A	N/A	N/A
								-	10	-	-	-	-	-	-						
MX150 ASSY RCP 2X8 CPA BK A/11	334728279	A-BLACK	GCP	PLR	CPA	M	R	-	2	3	4	-	-	-	-	SALEABLE		N/A	N/A	N/A	N/A
								-	-	11	12	-	-	-	-						
MX150 ASSY RCP 2X8 CPA BK A/12	334728280	A-BLACK	GCP	PLR	CPA	M	R	1	-	-	-	-	-	-	-	SALEABLE		N/A	N/A	N/A	N/A
								9	10	-	-	13	-	-	-						
MX150 ASSY RCP 2X8 CPA BK A/10	334728281	A-BLACK	GCP	PLR	CPA	M	R	1	-	-	-	-	-	-	-	SALEABLE		N/A	N/A	N/A	N/A
								9	10	11	12	13	-	-	-						
MX150 ASSY RCP 2X8 CPA BK A/8	334728282	A-BLACK	GCP	PLR	CPA	M	R	-	-	-	-	5	6	-	-	SALEABLE		N/A	N/A	N/A	N/A
								-	-	11	12	13	14	15	16						
MX150 ASSY RCP 2X8 CPA BK A/12	334728283	A-BLACK	GCP	PLR	CPA	M	R	-	-	-	-	-	-	7	-	SALEABLE		N/A	N/A	N/A	N/A
								-	-	-	-	-	14	15	16						
MX150 ASSY RCP 2X8 CPA BK A/13	334728284	A-BLACK	GCP	PLR	CPA	M	R	-	-	-	-	-	-	-	8	SALEABLE		N/A	N/A	N/A	N/A
								-	-	-	-	-	-	15	16						
MX150 ASSY RCP 2X8 CPA BK A/12	334728285	A-BLACK	GCP	PLR	CPA	M	R	1	-	-	-	-	6	-	-	SALEABLE		N/A	N/A	N/A	N/A
								9	-	-	-	-	-	15	-						
MX150 ASSY RCP 2X8 BK A/6	334728286	A-BLACK	GCP	PLR		M	R	1	2	3	4	5	6	7	8	SALEABLE		N/A	N/A	N/A	N/A
								-	-	-	-	13	-	15	-						
MX150 ASSY RCP 2X8 CPA BK A/12	334728287	A-BLACK	GCP	PLR	CPA	M	R	-	-	-	-	-	-	-	-	SALEABLE		N/A	N/A	N/A	N/A
								-	-	-	12	13	14	15	-						
MX150 ASSY RCP 2X8 CPA BK A/13	334728288	A-BLACK	GCP	PLR	CPA	M	R	-	-	-	-	-	-	-	-	SALEABLE		N/A	N/A	N/A	N/A
								-	10	-	-	13	-	-	16						
MX150 ASSY RCP 2X8 LG B/12	334728289	B-LIGHT GRAY	GCP	PLR		M	R	-	-	-	-	-	-	-	-	SALEABLE		N/A	N/A	N/A	N/A
								-	-	11	-	-	14	15	16						
MX150 ASSY RCP 2X8 CPA BK A/14	334728290	A-BLACK	GCP	PLR	CPA	M	R	-	-	-	-	-	-	-	-	SALEABLE		N/A	N/A	N/A	N/A
								9	10	-	-	-	-	-	-						

molex

MX150 RECEPTACLE 2X8 SEALED ASSEMBLY MAT SEAL
BOM AND PIN OUT SHEET

ASSEMBLY DESCRIPTION	ASSEMBLY PART NUMBER	COMPONENT THE PRESENCE OF AN ABBREVIATION INDICATES THE PRESENCE OF THAT COMPONENT						BLOCKED TERMINALS CAVITY WITH A NUMBER INDICATES BLOCKED TERMINAL POSITION CAVITY WITHOUT A NUMBER INDICATES OPEN TERMINAL POSITION								STATUS	COMMENT	OPTIONAL ATTACHMENTS SOLD SEPARATELY			
		HOUSING KEY/COLOR	GROMMET CAP	PLR	CPA	MAT SEAL	RING SEAL											BACKSHELL WITH RIBS	BACKSHELL WITHOUT RIBS	90^0 ADAPTOR WITH RIBS	90^0 ADAPTOR WITHOUT RIBS
MX150 ASSY RCP 2X8 CPA BK A/4	334728291	A-BLACK	GCP	PLR	CPA	M	R	-	-	3	4	5	6	-	-	SALEABLE		N/A	N/A	N/A	N/A
								9	10	11	12	13	14	15	16						
MX150 ASSY RCP 2X8 BK A/12	334728292	A-BLACK	GCP	PLR		M	R	-	-	-	4	-	-	7	-	SALEABLE		N/A	N/A	N/A	N/A
								-	-	-	-	-	14	-	16						
MX150 ASSY RCP 2X8 CPA BK A/8	334728293	A-BLACK	GCP	PLR	CPA	M	R	-	2	-	4	-	-	-	-	SALEABLE		N/A	N/A	N/A	N/A
								9	10	11	-	-	14	15	16						
MX150 ASSY RCP 2X8 BK A/9	334728294	A-BLACK	GCP	PLR		M	R	1	-	-	-	-	6	-	8	SALEABLE		N/A	N/A	N/A	N/A
								-	10	11	-	-	-	15	16						
MX150 ASSY RCP 2X8 BK A/13	334728295	A-BLACK	GCP	PLR		M	R	-	-	-	-	-	6	-	-	SALEABLE		N/A	N/A	N/A	N/A
								-	10	11	-	-	-	-	-						
MX150 ASSY RCP 2X8 CPA BK A/9	334728296	A-BLACK	GCP	PLR	CPA	M	R	-	-	-	4	5	-	-	-	SALEABLE		N/A	N/A	N/A	N/A
								9	10	-	-	13	14	-	16						
MX150 ASSY RCP 2X8 CPA BK A/9	334728297	A-BLACK	GCP	PLR	CPA	M	R	-	-	-	-	5	-	7	-	SALEABLE		N/A	N/A	N/A	N/A
								9	10	-	-	13	14	-	16						
MX150 ASSY RCP 2X8 CPA LG B/10	334728298	B-LIGHT GRAY	GCP	PLR	CPA	M	R	-	-	-	-	-	6	7	-	SALEABLE		N/A	N/A	N/A	N/A
								-	-	-	12	13	14	15	-						
MX150 ASSY RCP 2X8 CPA BK A/13	334728299	A-BLACK	GCP	PLR	CPA	M	R	-	-	-	-	-	6	-	-	SALEABLE		N/A	N/A	N/A	N/A
								-	10	11	-	-	-	-	-						
MX150 ASSY RCP 2X8 CPA BK A/12	334728300	A-BLACK	GCP	PLR	CPA	M	R	1	-	-	-	-	-	-	-	SALEABLE		N/A	N/A	N/A	N/A
								-	-	11	12	13	-	-	-						
MX150 ASSY RCP 2X8 CPA BK A/14	334728301	A-BLACK	GCP	PLR	CPA	M	R	1	-	-	-	-	-	-	-	SALEABLE		N/A	N/A	N/A	N/A
								-	-	-	-	13	-	-	-						
MX150 ASSY RCP 2X8 CPA BK A/10	334728302	A-BLACK	GCP	PLR	CPA	M	R	-	2	-	-	-	-	-	-	SALEABLE		N/A	N/A	N/A	N/A
								9	-	-	12	13	14	15	-						
MX150 ASSY RCP 2X8 CPA BK A/10	334728303	A-BLACK	GCP	PLR	CPA	M	R	-	-	3	-	-	-	-	-	SALEABLE		N/A	N/A	N/A	N/A
								9	-	-	12	13	14	15	-						
MX150 ASSY RCP 2X8 CPA BK A/8	334728304	A-BLACK	GCP	PLR	CPA	M	R	1	-	3	-	-	-	-	8	SALEABLE		N/A	N/A	N/A	N/A
								9	-	-	12	13	14	15	-						
MX150 ASSY RCP 2X8 CPA LG B/13	334728305	B-LIGHT GRAY	GCP	PLR	CPA	M	R	-	-	-	-	5	-	-	-	SALEABLE		N/A	N/A	N/A	N/A
								-	-	-	12	-	14	-	-						
MX150 ASSY RCP 2X8 CPA BK A/7	334728306	A-BLACK	GCP	PLR	CPA	M	R	-	-	-	4	5	6	7	-	SALEABLE		N/A	N/A	N/A	N/A
								9	10	-	-	13	14	-	16						
MX150 ASSY RCP 2X8 CPA BK A/10	334728307	A-BLACK	GCP	PLR	CPA	M	R	-	-	-	-	5	-	-	-	SALEABLE		N/A	N/A	N/A	N/A
								9	10	-	-	13	14	-	16						
MX150 ASSY RCP 2X8 BK A/11	334728308	A-BLACK	GCP	PLR		M	R	-	-	-	-	-	-	-	-	SALEABLE		N/A	N/A	N/A	N/A
								-	10	11	-	13	14	15	-						

TABLE OF CONTENTS

SHEET NO.	SHEET DESCRIPTION
1	NOTES AND BOM
2	CONFIGURATIONS
3-4	KEY CONFIGURATIONS
5	RECEPTACLE CONNECTOR ASSEMBLY
6	BACKSHELL NOTES
7-8	BACKSHELL
9-10	BACKSHELL CONFIGURATIONS
11	2X10 CONNECTOR INTERFACE DEFINITION

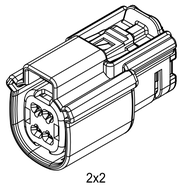

2x2

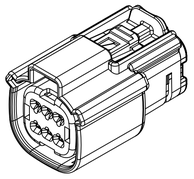

2x3

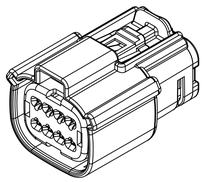

2x4

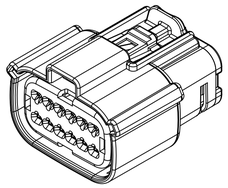

2x6

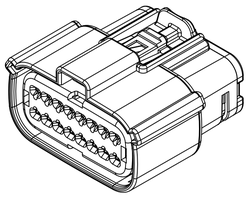

2x8

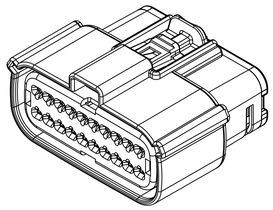

2x10

NOTES: VALID UNLESS OTHERWISE SPECIFIED

1. GENERAL:

a. APPLICATION SPECIFICATION SEE: AS-33472-100
- -CONTAINS: PRODUCT INTRODUCTION, PRODUCT SUMMARY, CONNECTOR ASSEMBLY, PACKAGING INFORMATION, CONNECTOR MATING, SERVICE INSTRUCTIONS, ELECTRICAL CONTINUITY CHECKING, CRIMPING, AND TROUBLESHOOTING.
- -DESIGNED TO MATE WITH DEVICE OR CONNECTOR AS SPECIFIED IN THE MATING INTERFACE/CONNECTOR DRAWINGS CHART.
- *DENOTES DRAWINGS THAT CAN BE ACCESSED AT <http://ewcap.uscarteams.org/>.
- -ASSEMBLY SHIPPED WITH PLR IN PRE-LOCK POSITION (SEE PLR PRE-LOCK VIEW SHEET 5).

b. PRODUCT SPECIFICATION SEE:
- -STANDARD CONFIGURATION (STD): PS-33472-000
- C8 - MID-VOLT CONFIGURATION : PS-33472-000
- -TRANSMISSION CONFIGURATION (TRNS):
  - CONTAINS SILICONE: TS-160038-0001
  - SILICONE FREE: TBD
- -UL V0 CONFIGURATION (UL V0): PS-160074-0001
  - CONTAINS: PRODUCT INTRODUCTION, PRODUCT SUMMARY, RATINGS (CURRENT, TEMPERATURE, SEALING, AND FLAMMABILITY), TERMINALS, WIRE DIAMETER RANGE, PRODUCT VALIDATION, AND PRODUCT DEVIATIONS.

c. PACKAGING SPECIFICATION PER MOLEX DRAWING: SEE PACKAGING CHART

d. PARTS MUST BE IN COMPLIANCE TO MOLEX CHEMICAL SUBSTANCES FOR PRODUCTS AND PACKAGING SPECIFICATION: QEHS-699000-301

e. DATA MUST BE SUBMITTED UNDER THE MOLEX PART NUMBER TO IMDS (COMPANY ID#13255)

2. DESIGN - MATERIALS:

a. FOR BILL OF MATERIALS SEE:
- -STANDARD CONFIGURATION SD-33472-0002
- -TRANSMISSION CONGURATION
  - CONTAINS SILICONE: SD-160038-0002
  - SILICONE FREE: SD-160092-0002
- -UL V0 CONFIGURATION SD-160074-0002
- C8 - MID-VOLT CONFIGURATION SD-300361-0002

b. TRANSMISSION CONNECTOR COMPONENTS MUST MEET THE MATERIAL REQUIREMENTS SPECIFIED IN TS-160038-0001 & TBD

3. DESIGN - GEOMETRY:

a. THE 3-D CAD DATA IS BASIC (WITHOUT TOLERANCE) AND MASTER FOR THIS PART WITH THE EXCEPTION OF UNDERLINED DIMENSIONS. DIMENSIONAL INFORMATION NOT SHOWN ON THIS DRAWING IS DEFINED BY THE DATA FILE AT ITS LATEST REVISION.

b. GEOMETRIC DIMENSIONS AND TOLERANCES PER ASME Y14.5M-2009

c. EDGES AND UNDIMENSIONED DETAILS PER ISO13715

d. CORNERS SHOWN AS SHARP TO BE R 0.2 MAX.

e. LETTERING SHALL BE 0.15 MAX RAISED IN 0.25 MAX RECESS PAD. THIS INCLUDES RECYCLING CODE, CAVITY ID, VENDOR IDENTIFICATION, AND CUSTOMER MATERIAL NUMBER.

f. VISUAL DEFECTS SHALL MEET COSMETIC STANDARD PS-45499-002 (Class B).

g. LASER MARKING:
1. PART NUMBER
2. DAY OF THE YEAR
3. SHIFT
4. YEAR

FOR ADDITIONAL INFORMATION SEE SECTION 5 UNDER PROCEDURES IN ES-34735-008.

h. 2X2 CLIP-SLOT DESIGN IS BASED ON USCAR/EWCAP 7mm CLIP SLOT EWCAP - 005 - 7
2X3 THRU 2X10 CLIP-SLOT DESIGN IS BASED ON USCAR/EWCAP 11mm CLIP SLOT EWCAP - 005 - 11

PACKAGING

	DESCRIPTION	DRAWING NO.
C9	2X2	PK-31300-903
	2X3	PK-31300-903
	2X4	PK-31300-903
	2X6	PK-31300-903
	2X8	PK-31300-903
	2X10	PK-31300-903

MATING INTERFACE/CONNECTOR DRAWINGS

	DESCRIPTION	INTERFACE DEFINITION	MOLEX INLINE
	STANDARD 2X2	*150-S-004-2-Z02	SD-33482-0001
	UL V0 2X2	*150-S-004-2-Z02	SD-33482-0001
C8	MID-VOLT 2X2	*150-S-004-2-Z02	SD-33482-0001
	STANDARD 2X3	*150-S-006-2-Z02	SD-33482-0001
	TRANSMISSION 2X3	*150-S-006-2-Z02	N/A
C8	MID-VOLT 2X3	*150-S-006-2-Z02	SD-33482-0001
	STANDARD 2X4	*150-S-008-2-Z02	SD-33482-0001
	UL V0 2X4	*150-S-008-2-Z02	SD-33482-0001
	STANDARD 2X6	*150-S-012-2-Z01	SD-33482-0001
	UL V0 2X6	*150-S-012-2-Z01	SD-33482-0001
	TRANSMISSION 2X6	*150-S-012-2-Z01	N/A
	STANDARD 2X8	*150-S-016-2-Z01	SD-33482-0001
	STANDARD 2X10	SD-33472-0001	SD-33482-0001
	UL V0 2X10	SD-33472-0001	SD-33482-0001
C8	MID-VOLT 2X10	SD-33472-0001	SD-33482-0001

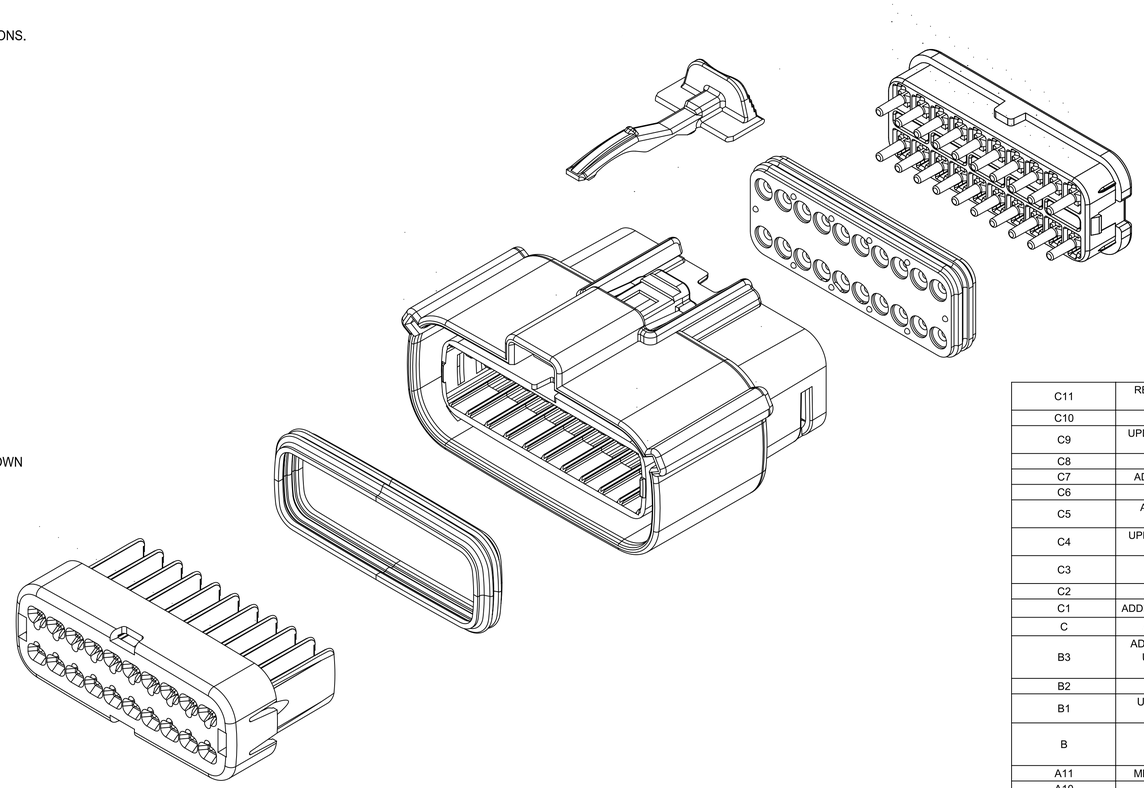

REV	REV DESCRIPTION
C11	REMOVED "NOT VALIDATED" TEXT FROM SHEET 11
C10	ADDED RELIEF SLOT - CANCELLED
C9	UPDATE 2X2 PACKAGING DRAWING NO. ON SHEET 1
C8	ADDE MID-VOLT VERSION ASSY.
C7	ADDED TRANSMISSION 2X6 IN APPENDIX
C6	CORRECTED 2X6 UL V0 DIM "J"
C5	ADDED UL V0 VERSION PRODUCT "PS" INFORMATION
C4	UPDATED GENERAL TOLERANCES IN TITLE BLOCK
C3	CORRECTED 2X2 DIM A AND D, CORRECTED 2X4 DIM D
C2	ADDED MOLEX BACKSHELL DETAILS
C1	ADDED 2X6-TRNS.-WITH/WITHOUT CLIPSLOT *
C	ADDED 2X10-STD.-WITH CLIPSLOT *
B3	ADD ROW FOR 2X6 V0 ON SHEET 5DIM3# UPDATE TO 25.0 MAX FOR V0DIM11# UPDATE TO 33.85 MAX FOR V0
B2	ADD 2X6 UL V0 CONFIGURATIONS
B1	UPDATE 2X6 W/O CLIPSLOT DIM G ON TABLE OF SHEET 5
B	ADDED 2X2 - STD- WITH CLIPSLOT, 2X8 - STD- WITH CLIPSLOT AND NOTE h
A11	MINOR GEOMETRY CHANGE FOR UL V0
A10	UPDATED 2X4 DRAWING NUMBER
A9	UPDATED 2X10 PART NUMBERS
A8	UPDATED 2X3 DRAWING NUMBER
A7	UPDATED 2X10 INTERFACE
A6	ADDED TRANSMISSION REFERENCES
A5	ADD 2X10 INTERFACE SHEETS
A4	ADD UL V0 CONFIGURATIONS
A3	ADDED 2X3 STD AND TRANSMISSION
A2	UPDATED 2X8 BLD DRAWINGS
A1	FIXED TYPO IN NOTE 1a, UPDATED 2X6 MOLEX INLINE BLADE DRAWING
A	INITIAL RELEASE

INSPECTION NUMBER LOG
LAST NUMBER: 11 ADDED: 11 REMOVED:

THIS DRAWING CONTAINS INFORMATION THAT IS PROPRIETARY TO MOLEX ELECTRONIC TECHNOLOGIES, LLC AND SHOULD NOT BE USED WITHOUT WRITTEN PERMISSION

FUNCTIONAL SYMBOLS: FA = 0, FC = 0, FP = 0

DIVISIONAL SYMBOLS

DIMENSION UNITS	SCALE
MM	1:1

GENERAL TOLERANCES (UNLESS SPECIFIED)

ANGULAR TOL	± 1°
4 PLACES	±
3 PLACES	±
2 PLACES	± 0.100
1 PLACE	± 0.20
0 PLACES	±

DRAFT WHERE APPLICABLE MUST REMAIN WITHIN DIMENSIONS

CURRENT REV DESC: SEE REVISION TABLE

STATUS: Production
DRWN: Yuki Song 2025-07-16
CHK'D: Elvis Song 2025-07-17
APPR: Isong05 2025-07-17

THIRD ANGLE PROJECTION | DRAWING: A1-SIZE | SERIES: 33472

molex

MX150 RCPT
DUAL ROW SEALED ASSEMBLY

PRODUCT CUSTOMER DRAWING

DOCUMENT NUMBER	DOC TYPE	DOC PART	REVISION
SD-33472-0001	PSD	001	C11

MATERIAL NUMBER	CUSTOMER	SHEET NUMBER
	GENERAL MARKET	1 OF 11

FORMAT TC/signoff-A1
PRINTED BY
DATE 2025/08/01

SHEET DESCRIPTION

CONFIGURATIONS

C8

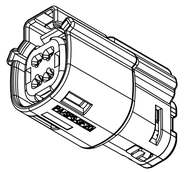

2X2 - STD.
2X2 - TRNS. - SILICONE FREE
2X2 - MID-VOLT

B

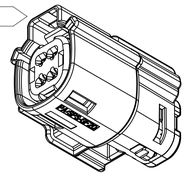

2X2 - STD. - WITH CLIPSLOT *

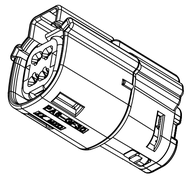

† 2X2 - UL V0

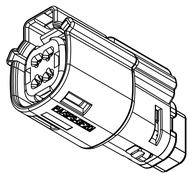

2X2 - STD. - LENGTHENED

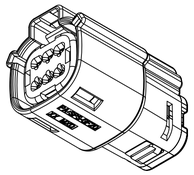

2X3 - STD.
2X3 - TRNS. - CONTAINS SILICONE

C8

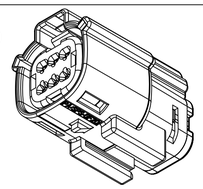

2X3 - STD. - WITH CLIPSLOT
2X3 - MID-VOLT. - WITH CLIPSLOT

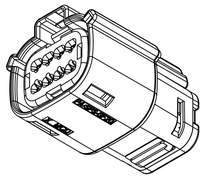

2X4 - STD.

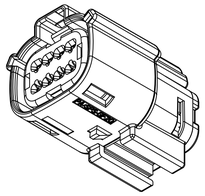

2X4 - STD. - WITH CLIPSLOT *

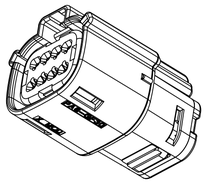

† 2X4 - UL V0

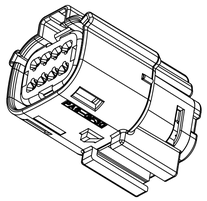

† 2X4 - UL V0-WITH CLIPSLOT*

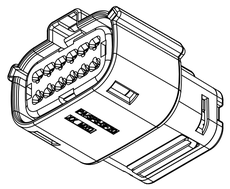

2X6 - STD.
C1 † 2X6 - TRNS.

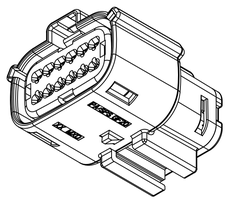

2X6 - STD. - WITH CLIPSLOT *
C1 † 2X6 - TRNS. - WITH CLIPSLOT *

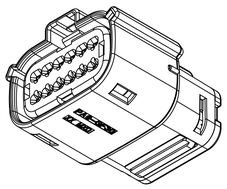

† 2X6 - UL V0

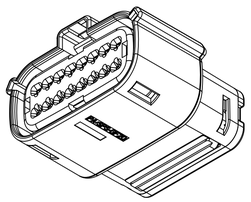

2X8 - STD.

B

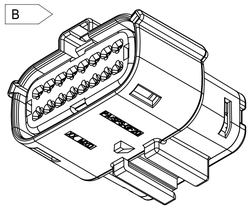

2X8 - STD. - WITH CLIPSLOT *

C8

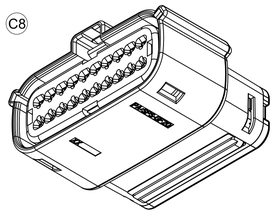

2X10 - STD.
2X10 - MID-VOLT.

C

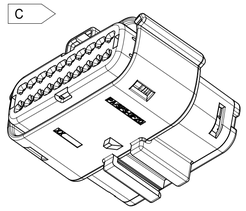

2X10 - STD. - WITH CLIPSLOT *

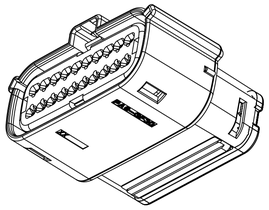

† 2X10 - UL V0

* WITH CLIPSLOT CONFIGURATION DOES NOT
MEET THE USCAR PACKAGING FRAME REQUIREMENTS
† MINOR GEOMETRY DIFFERENCE THAN STANDARD CONFIGURATION
SEE NOTES 1a & 2a-b FOR MORE INFORMATION

THIS DRAWING CONTAINS INFORMATION THAT IS PROPRIETARY TO MOLEX ELECTRONIC TECHNOLOGIES, LLC AND SHOULD NOT BE USED WITHOUT WRITTEN PERMISSION

FUNCTIONAL SYMBOLS	DIMENSION UNITS	SCALE
FA = 0	MM	1:1
FC = 0	GENERAL TOLERANCES (UNLESS SPECIFIED)	
FP = 0	ANGULAR TOL	± 1°
DIVISIONAL SYMBOLS	4 PLACES	±
	3 PLACES	±
	2 PLACES	± 0.100
	1 PLACE	± 0.20
	0 PLACES	±
	DRAFT WHERE APPLICABLE MUST REMAIN WITHIN DIMENSIONS	

CURRENT REV DESC: SEE REVISION TABLE

STATUS: Production
DRWN: Yuki Song 2025-07-16
CHK'D: Elvis Song 2025-07-17
APPR: Isong05 2025-07-17

THIRD ANGLE PROJECTION | DRAWING: A1-SIZE | SERIES: 33472

molex

MX150 RCPT
DUAL ROW SEALED ASSEMBLY

PRODUCT CUSTOMER DRAWING

DOCUMENT NUMBER	DOC TYPE	DOC PART	REVISION
SD-33472-0001	PSD	001	C11

MATERIAL NUMBER	CUSTOMER	SHEET NUMBER
	GENERAL MARKET	2 OF 11

FORMAT: TCLengineerA1
REVISION: D
DATE: 2022/08/01

SHEET DESCRIPTION

KEY CONFIGURATIONS

2X2

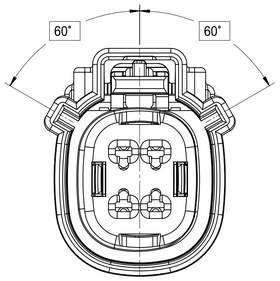

KEY A

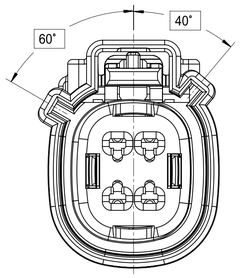

KEY B

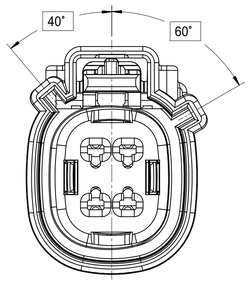

KEY C

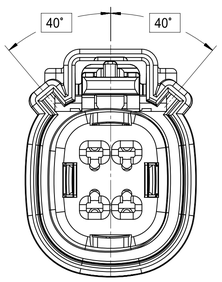

KEY D

2X3

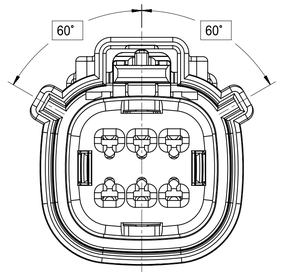

KEY A

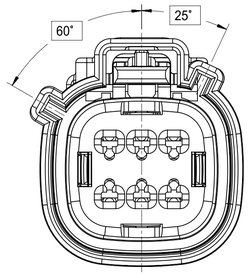

KEY B

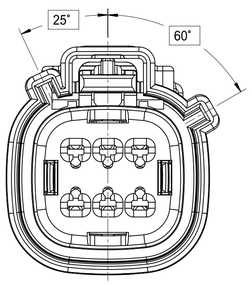

KEY C

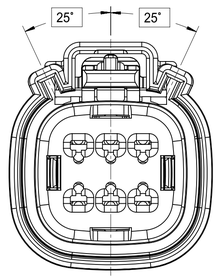

KEY D

2X4

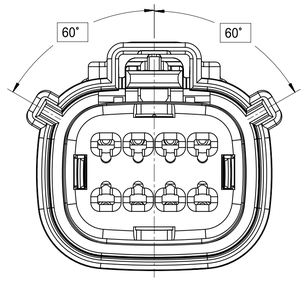

KEY A

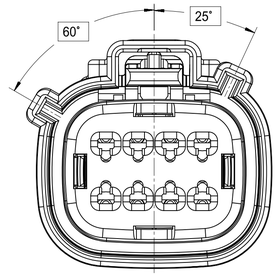

KEY B

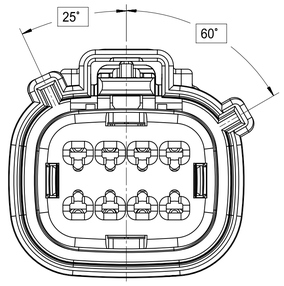

KEY C

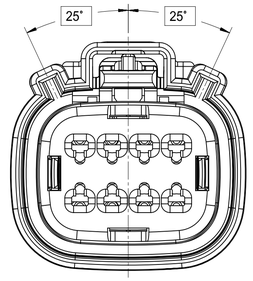

KEY D

FUNCTIONAL SYMBOLS		
FA = 0	DIMENSION UNITS	SCALE
	MM	1:1
FC = 0	GENERAL TOLERANCES (UNLESS SPECIFIED)	
	ANGULAR TOL	± 1˚
FP = 0	4 PLACES	±
DIVISIONAL SYMBOLS	3 PLACES	±
	2 PLACES	± 0.100
	1 PLACE	± 0.20
	0 PLACES	±
	DRAFT WHERE APPLICABLE MUST REMAIN WITHIN DIMENSIONS	

THIS DRAWING CONTAINS INFORMATION THAT IS PROPRIETARY TO MOLEX ELECTRONIC TECHNOLOGIES, LLC AND SHOULD NOT BE USED WITHOUT WRITTEN PERMISSION

CURRENT REV DESC: SEE REVISION TABLE

STATUS: Production

DRWN:	Yuki Song	2025-07-16
CHK'D:	Elvis Song	2025-07-17
APPR:	Isong05	2025-07-17

THIRD ANGLE PROJECTION | DRAWING: A1-SIZE | SERIES: 33472

molex

MX150 RCPT
DUAL ROW SEALED ASSEMBLY

PRODUCT CUSTOMER DRAWING

DOCUMENT NUMBER	DOC TYPE	DOC PART	REVISION
SD-33472-0001	PSD	001	C11

MATERIAL NUMBER	CUSTOMER	SHEET NUMBER
	GENERAL MARKET	3 OF 11

FORMAT: TC1Engineer.F
REVISION: B
DATE: 2022/06/01

SHEET DESCRIPTION

KEY CONFIGURATIONS CONT.

2X6

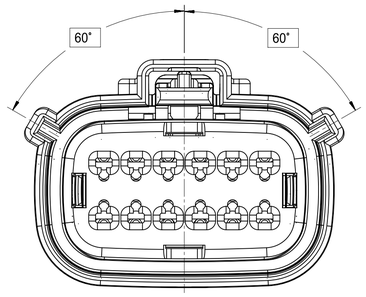

KEY A

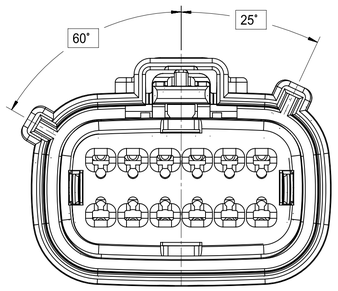

KEY B

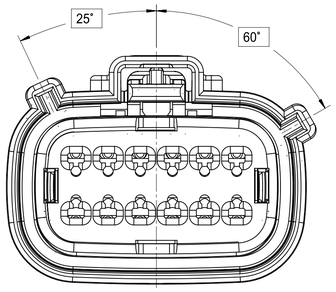

KEY C

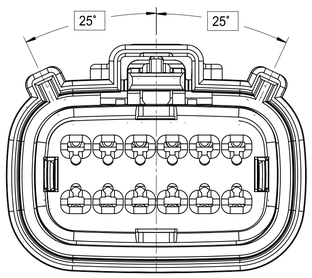

KEY D

2X8

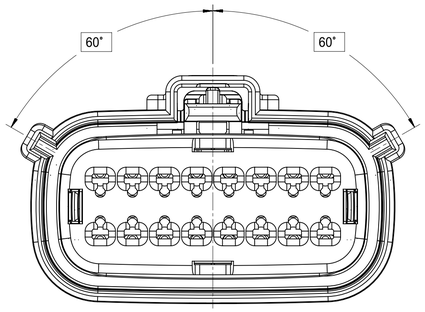

KEY A

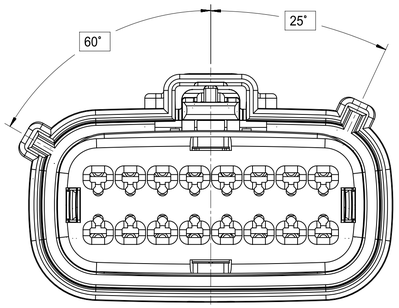

KEY B

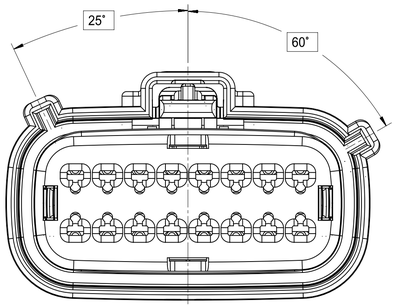

KEY C

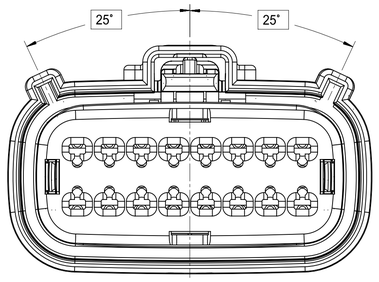

KEY D

2X10

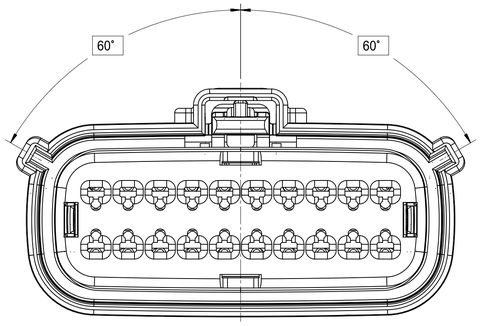

KEY A

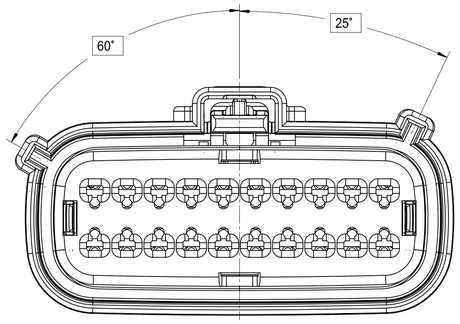

KEY B

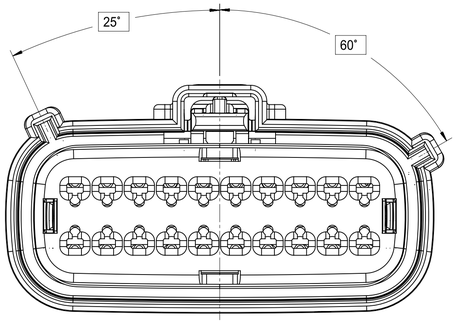

KEY C

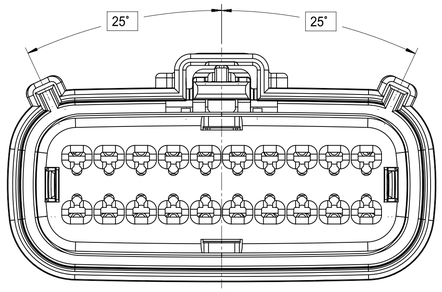

KEY D

THIS DRAWING CONTAINS INFORMATION THAT IS PROPRIETARY TO MOLEX ELECTRONIC TECHNOLOGIES, LLC AND SHOULD NOT BE USED WITHOUT WRITTEN PERMISSION

FUNCTIONAL SYMBOLS	DIMENSION UNITS	SCALE
FA = 0	MM	1:1
FC = 0	GENERAL TOLERANCES (UNLESS SPECIFIED)	
FP = 0	ANGULAR TOL	± 1˚
DIVISIONAL SYMBOLS	4 PLACES	±
	3 PLACES	±
	2 PLACES	± 0.100
	1 PLACE	± 0.20
	0 PLACES	±

DRAFT WHERE APPLICABLE MUST REMAIN WITHIN DIMENSIONS

CURRENT REV DESC: SEE REVISION TABLE

STATUS: Production

DRWN:	Yuki Song	2025-07-16
CHK'D:	Elvis Song	2025-07-17
APPR:	Isong05	2025-07-17

THIRD ANGLE PROJECTION

DRAWING	SERIES
A1-SIZE	33472

molex

MX150 RCPT
DUAL ROW SEALED ASSEMBLY

PRODUCT CUSTOMER DRAWING

DOCUMENT NUMBER	DOC TYPE	DOC PART	REVISION
SD-33472-0001	PSD	001	C11

MATERIAL NUMBER	CUSTOMER	SHEET NUMBER
	GENERAL MARKET	4 OF 11

FORMAT: 01-Engineering
REVISION: B
DATE: 2022/08/01

SHEET DESCRIPTION

RECEPTACLE CONNECTOR ASSEMBLY

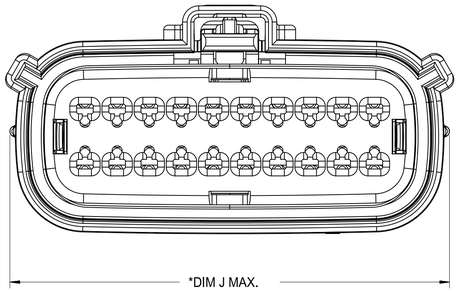

* APPLIES TO UL-V0 CONFIGURATIONS ONLY

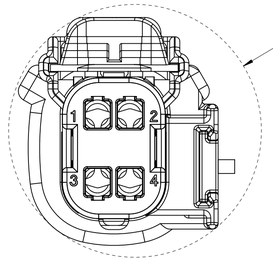

B APPLIES TO 2X2 - STD. - WITH CLIPSLOT ONLY

CHARTED DIMENSIONS

DESCRIPTION	DIMENSIONS							
	A	B	C	D	E	F	G	J
2X2 W/O CLIPSLOT	18.75	1.75	25.45	24.90	37.65	N/A	2.75±0.50	
2X2 W/ CLIPSLOT	18.75	1.75	27.65	24.90	37.65	N/A	2.75±0.50	
2X2 LENGTHENED	18.75	1.75	25.45	24.90	42.25	N/A	2.75±0.50	20.04
2X3 W/ CLIPSLOT	22.25	3.5	30.50	N/A	37.65	27.96	4.0±0.4	
2X3 W/O CLIPSLOT	22.25	3.5	26.24	24.90	37.65	N/A	4.0±0.4	
2X4 W/ CLIPSLOT	25.75	1.75	31.50	N/A	37.65	28.00	2.75±0.50	27.04
2X4 W/O CLIPSLOT	25.75	1.75	29.19	24.90	37.65	N/A	2.75±0.50	27.04
2X6 W/ CLIPSLOT	32.75	1.75	35.58	N/A	37.65	27.76	2.75±0.50	
C6 2X6 W/O CLIPSLOT	32.75	1.75	35.58	24.90	37.65	N/A	2.75±0.50	34.04
2X8 W/O CLIPSLOT	39.80	1.75	42.25	24.90	37.65	N/A	4.0±0.4	
2X8 W/ CLIPSLOT	39.80	1.75	42.25	N/A	37.65	27.80	4.0±0.4	
2X10 W/O CLIPSLOT	46.75	1.75	49.95	24.90	37.65	N/A	2.75±0.50	48.04
2X10 W/ CLIPSLOT	46.75	1.75	49.95	N/A	37.65	27.80	2.75±0.50	

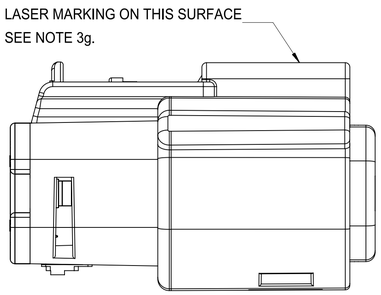

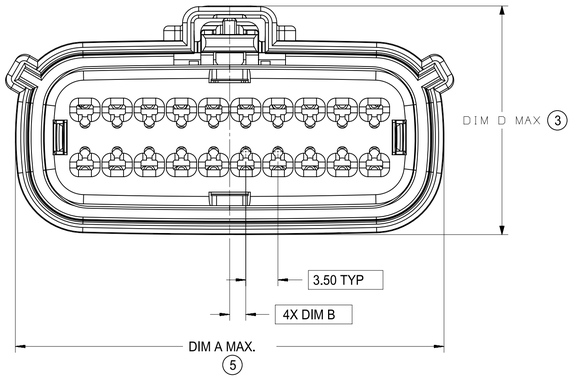

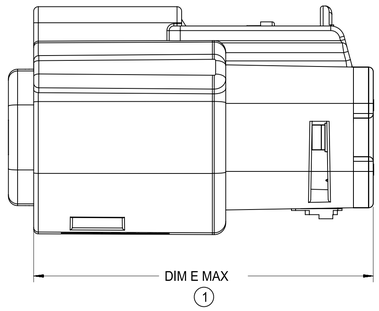

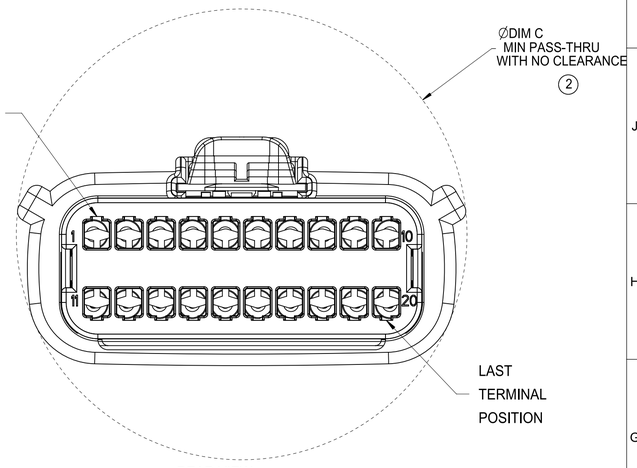

REAR VIEW
(WIRE HARNESS SIDE)

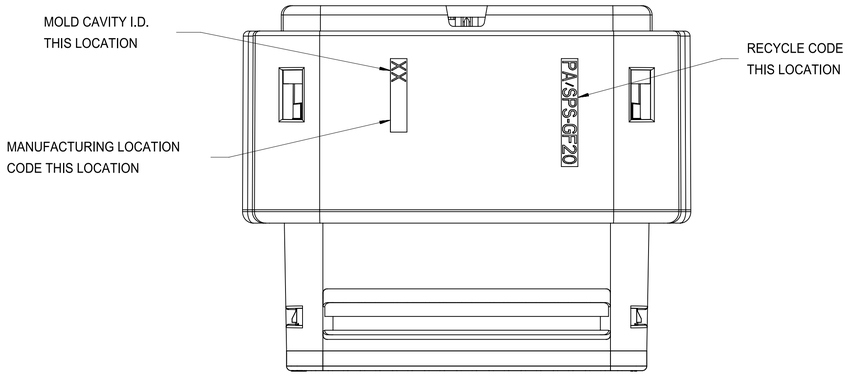

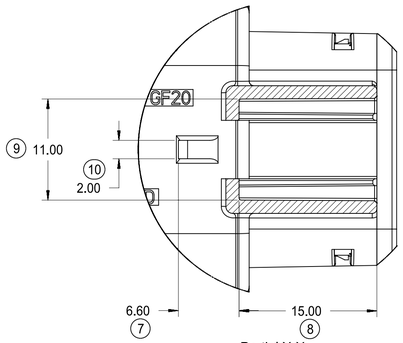

Partial X-X
SCALE 3:1

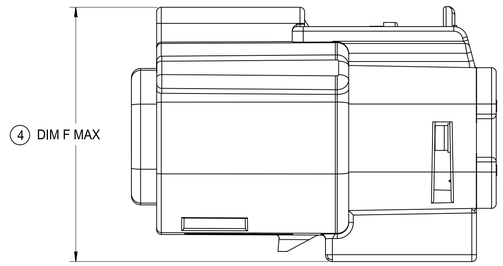

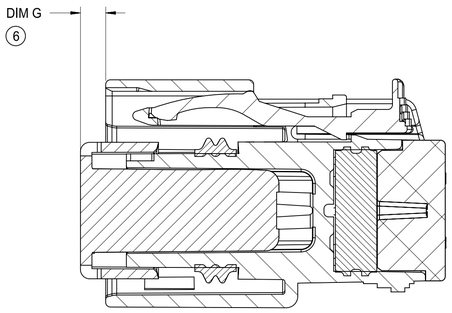

PRIMARY LOCK REINFORCEMENT (PLR) SHOWN
IN PRE-STAGED POSITION

SECTION Y-Y

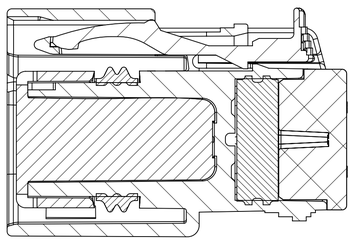

PRIMARY LOCK REINFORCEMENT (PLR) SHOWN
IN FINAL-LOCK POSITION

SECTION Z-Z

THIS DRAWING CONTAINS INFORMATION THAT IS PROPRIETARY TO MOLEX ELECTRONIC TECHNOLOGIES, LLC AND SHOULD NOT BE USED WITHOUT WRITTEN PERMISSION

FUNCTIONAL SYMBOLS
E A = 0
E C = 0
E D = 0

DIVISIONAL SYMBOLS

DIMENSION UNITS	SCALE
MM	1:1

GENERAL TOLERANCES (UNLESS SPECIFIED)

ANGULAR TOL	± 1°
4 PLACES	±
3 PLACES	±
2 PLACES	± 0.100
1 PLACE	± 0.20
0 PLACES	±

DRAFT WHERE APPLICABLE MUST REMAIN WITHIN DIMENSIONS

CURRENT REV DESC: SEE REVISION TABLE

STATUS: Production
DRWN: Yuki Song 2025-07-16
CHK'D: Elvis Song 2025-07-17
APPR: Isong05 2025-07-17

THIRD ANGLE PROJECTION

DRAWING	SERIES
A1-SIZE	33472

molex

MX150 RCPT
DUAL ROW SEALED ASSEMBLY

PRODUCT CUSTOMER DRAWING

DOCUMENT NUMBER	DOC TYPE	DOC PART	REVISION
SD-33472-0001	PSD	001	C11

MATERIAL NUMBER	CUSTOMER	SHEET NUMBER
	GENERAL MARKET	5 OF 11

SHEET DESCRIPTION
BACKSHELL NOTES

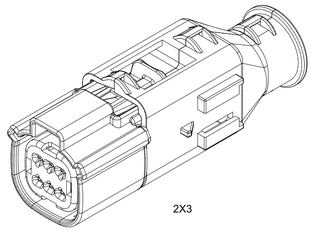

2X3

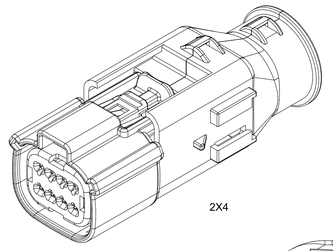

2X4

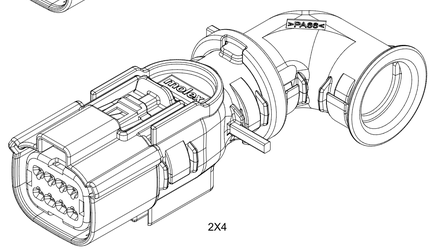

2X4

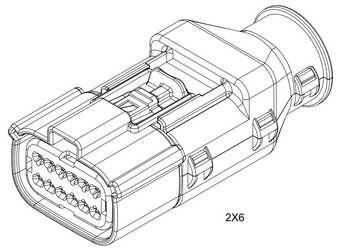

2X6

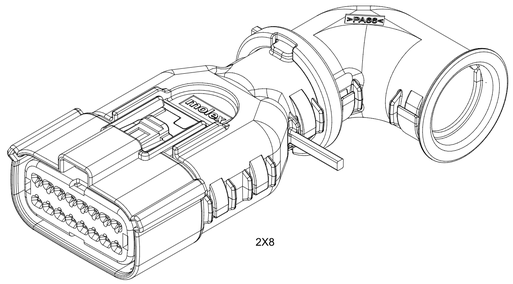

2X8

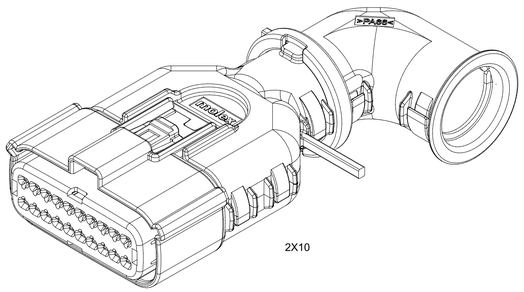

2X10

BACKSHELL NOTES: VALID UNLESS OTHERWISE SPECIFIED

1. GENERAL:

a. APPLICATION SPECIFICATION SEE: AS-34951-001

-DESIGNED TO MATE WITH RECEPTACLE SEALED ASSEMBLY SPECIFIED IN MOLEX DRAWING SD-33472-0001.

-SYSTEM TO BE USED WITH WIRE WITHIN DIAMETER RANGE OF 1.2mm TO 2.69mm.

-COMPONENTS ARE OPTIONAL AND MUST BE PURCHASED SEPERATELY.

-DESIGN IS OWNED BY SCHLEMMER FOR SCHLEMMER BACKSHELL.

-DESIGN IS OWNED BY MOLEX FOR MOLEX BACKSHELL.

-90˚ ADAPTOR DESIGN IS OWNED BY MOLEX.

-FOR ADDITIONAL INFORMATION SEE THE BACKSHELL COMPONENT DRAWING SD-34951-0001.

BACKSHELL CUSTOMER
MODEL NUMBER LEGEND

34951-XXXX

CUSTOMER MODEL COMPONENTS
- 0 - SCHLEMMER BACKSHELL ONLY
- 1 - SCHLEMMER BACKSHELL & MX150 HOUSING KEY A ASSEMBLY
- 2 - SCHLEMMER BACKSHELL & MX150 HOUSING KEY B ASSEMBLY
- 3 - SCHLEMMER BACKSHELL & MX150 HOUSING KEY C ASSEMBLY
- 4 - SCHLEMMER BACKSHELL & MX150 HOUSING KEY D ASSEMBLY
- 5 - MOLEX BACKSHELL ONLY
- 6 - MOLEX BACKSHELL & MX150 HOUSING KEY A ASSEMBLY
- 7 - MOLEX BACKSHELL & MX150 HOUSING KEY B ASSEMBLY
- 8 - MOLEX BACKSHELL & MX150 HOUSING KEY C ASSEMBLY
- 9 - MOLEX BACKSHELL & MX150 HOUSING KEY D ASSEMBLY

BACKSHELL FEATURES
- 1 - WITH RIBS
- 2 - WITHOUT RIBS
- 3 - 90˚ ADAPTOR

MX150 CIRCUIT SIZE 04, 06, 08, 12, 16, 20

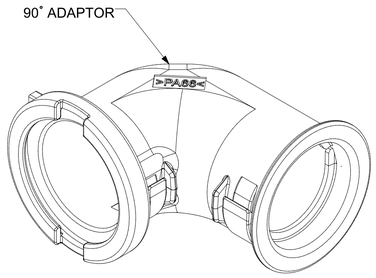

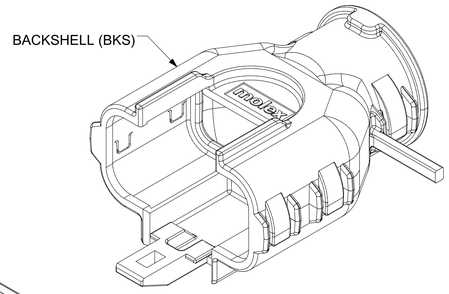

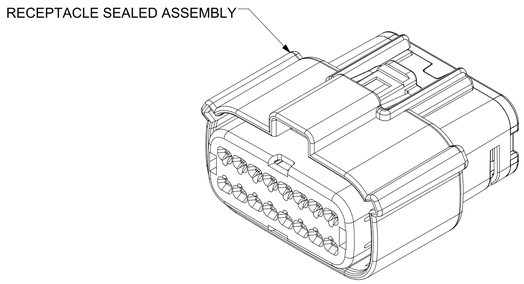

SCALE 2:1

THIS DRAWING CONTAINS INFORMATION THAT IS PROPRIETARY TO MOLEX ELECTRONIC TECHNOLOGIES, LLC AND SHOULD NOT BE USED WITHOUT WRITTEN PERMISSION

FUNCTIONAL SYMBOLS	DIMENSION UNITS	SCALE	CURRENT REV DESC: SEE REVISION TABLE
FA = 0	MM	1.5:1	
FC = 0	GENERAL TOLERANCES (UNLESS SPECIFIED)		
FP = 0	ANGULAR TOL	± 1˚	
DIVISIONAL SYMBOLS	4 PLACES	±	
	3 PLACES	±	
	2 PLACES	± 0.100	
	1 PLACE	± 0.20	
	0 PLACES	±	
	DRAFT WHERE APPLICABLE MUST REMAIN WITHIN DIMENSIONS		

STATUS: Production
DRWN: Yuki Song 2025-07-16
CHK'D: Elvis Song 2025-07-17
APPR: Isong05 2025-07-17

THIRD ANGLE PROJECTION	DRAWING	SERIES	MATERIAL NUMBER	CUSTOMER	SHEET NUMBER
	A1-SIZE	33472		GENERAL MARKET	6 OF 11

molex

MX150 RCPT
DUAL ROW SEALED ASSEMBLY

PRODUCT CUSTOMER DRAWING

DOCUMENT NUMBER	DOC TYPE	DOC PART	REVISION
SD-33472-0001	PSD	001	C11

SHEET DESCRIPTION
SCHLEMMER BACKSHELL

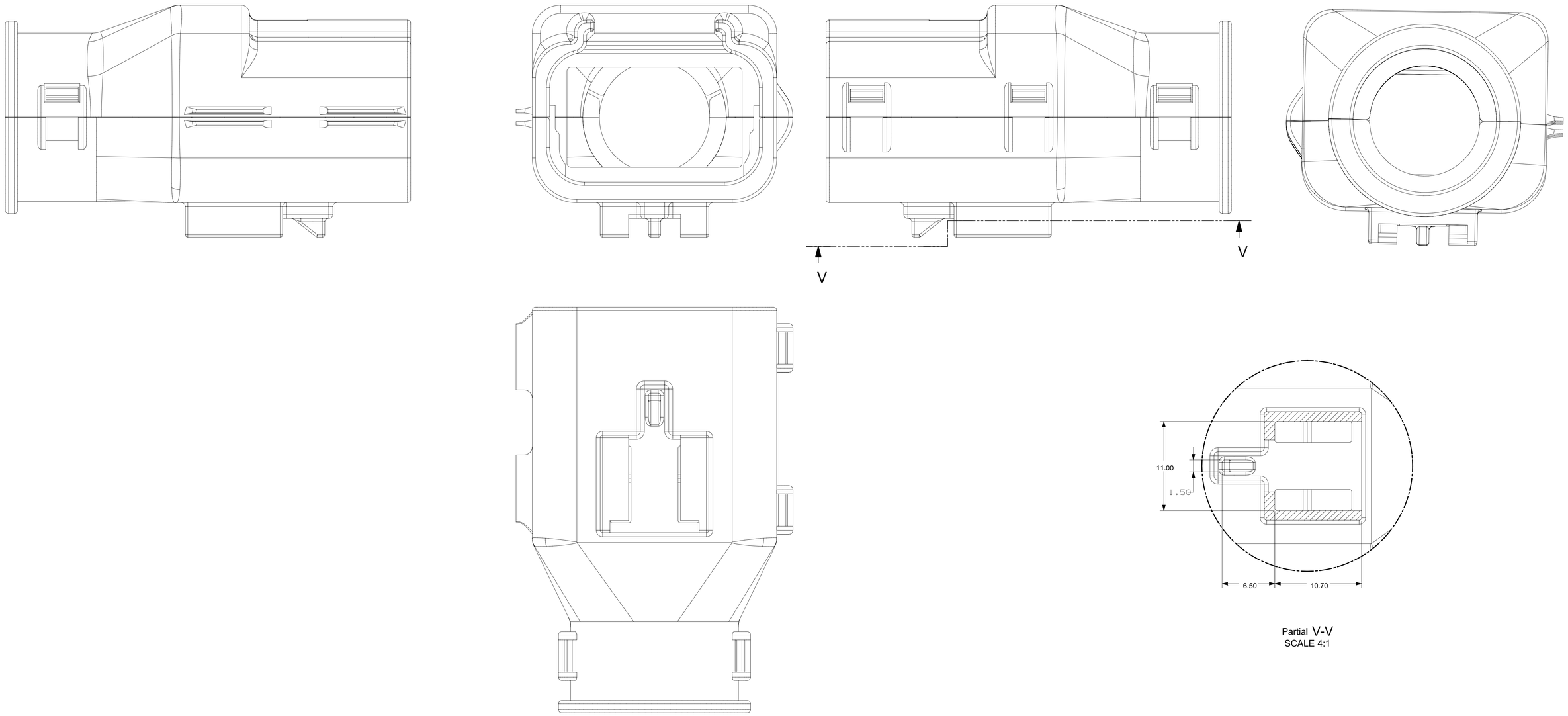

Partial V-V
SCALE 4:1

FUNCTIONAL SYMBOLS	THIS DRAWING CONTAINS INFORMATION THAT IS PROPRIETARY TO MOLEX ELECTRONIC TECHNOLOGIES, LLC AND SHOULD NOT BE USED WITHOUT WRITTEN PERMISSION			
FA = 0	DIMENSION UNITS: MM	SCALE: 4:1	CURRENT REV DESC: SEE REVISION TABLE	molex
FC = 0	GENERAL TOLERANCES (UNLESS SPECIFIED)			MX150 RCPT DUAL ROW SEALED ASSEMBLY
FP = 0	ANGULAR TOL ± 1°			
DIVISIONAL SYMBOLS	4 PLACES ±			PRODUCT CUSTOMER DRAWING
	3 PLACES ±			
	2 PLACES ± 0.100		STATUS: Production	DOCUMENT NUMBER: SD-33472-0001 / DOC TYPE: PSD / DOC PART: 001 / REVISION: C11
	1 PLACE ± 0.20		DRWN: Yuki Song 2025-07-16	
	0 PLACES ±		CHK'D: Elvis Song 2025-07-17	
			APPR: Isong05 2025-07-17	
	DRAFT WHERE APPLICABLE MUST REMAIN WITHIN DIMENSIONS	THIRD ANGLE PROJECTION	DRAWING: A1-SIZE / SERIES: 33472	MATERIAL NUMBER / CUSTOMER: GENERAL MARKET / SHEET NUMBER: 7 OF 11

SHEET DESCRIPTION
MOLEX BACKSHELL

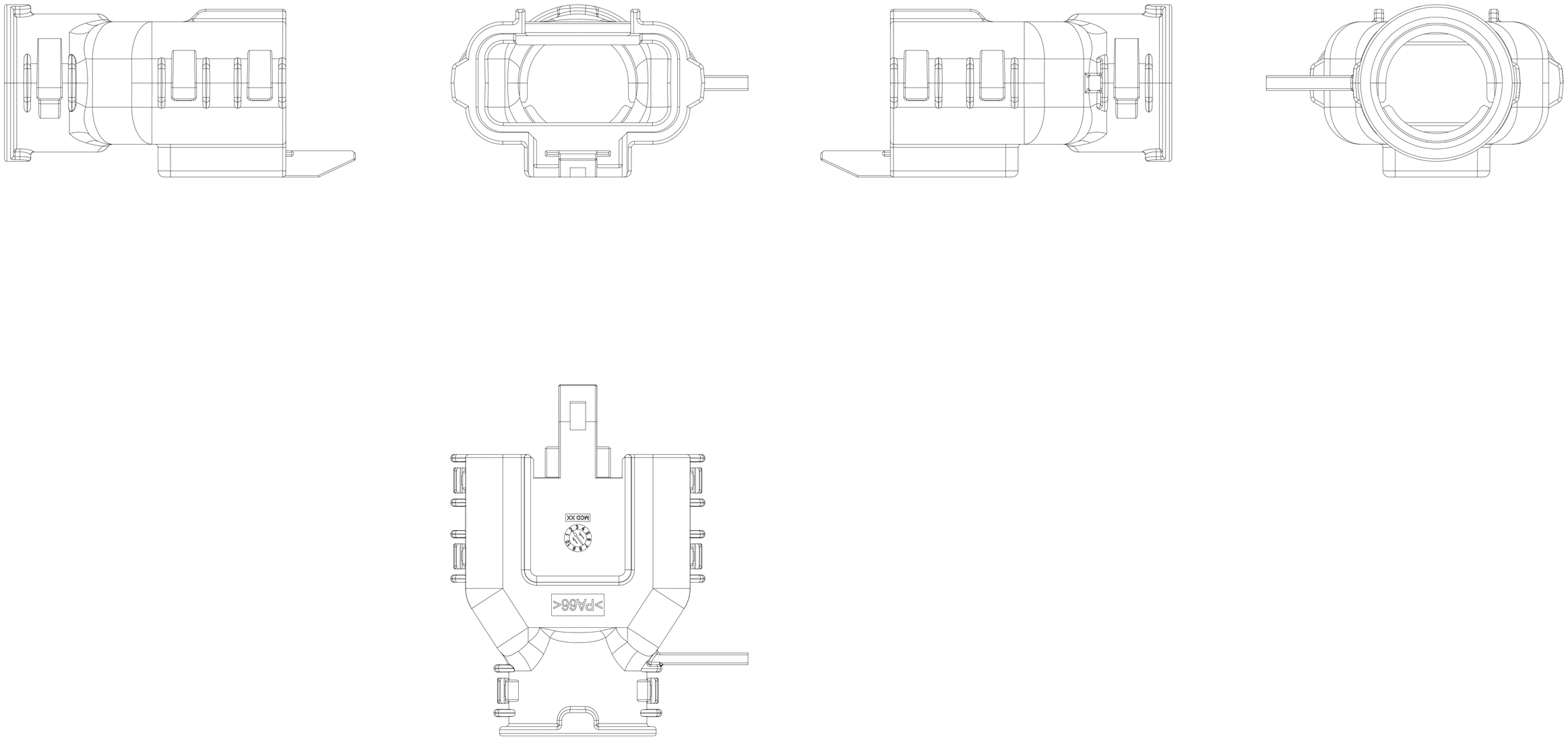

THIS DRAWING CONTAINS INFORMATION THAT IS PROPRIETARY TO MOLEX ELECTRONIC TECHNOLOGIES, LLC AND SHOULD NOT BE USED WITHOUT WRITTEN PERMISSION

FUNCTIONAL SYMBOLS	DIMENSION UNITS	SCALE
FA = 0	MM	3:1
FC = 0	GENERAL TOLERANCES (UNLESS SPECIFIED)	
FP = 0	ANGULAR TOL	± 1°
DIVISIONAL SYMBOLS	4 PLACES	±
	3 PLACES	±
	2 PLACES	± 0.100
	1 PLACE	± 0.20
	0 PLACES	±
	DRAFT WHERE APPLICABLE MUST REMAIN WITHIN DIMENSIONS	

CURRENT REV DESC: SEE REVISION TABLE

STATUS: Production
DRWN: Yuki Song 2025-07-16
CHK'D: Elvis Song 2025-07-17
APPR: Isong05 2025-07-17

THIRD ANGLE PROJECTION

DRAWING	SERIES
A1-SIZE	33472

molex

MX150 RCPT
DUAL ROW SEALED ASSEMBLY

PRODUCT CUSTOMER DRAWING

DOCUMENT NUMBER	DOC TYPE	DOC PART	REVISION
SD-33472-0001	PSD	001	C11

MATERIAL NUMBER	CUSTOMER	SHEET NUMBER
	GENERAL MARKET	8 OF 11

SHEET DESCRIPTION
SCHLEMMER BACKSHELL CONFIGURATIONS

CHARTED DIMENSIONS	
DESCRIPTION	DIMENSIONS
	H
2X3 W/ CLIPSLOT	N/A
2X3 W/O CLIPSLOT	28.50
2X4 W/ CLIPSLOT	N/A
2X4 W/O CLIPSLOT	30.75
2X6 W/ CLIPSLOT	N/A
2X6 W/O CLIPSLOT	35.83

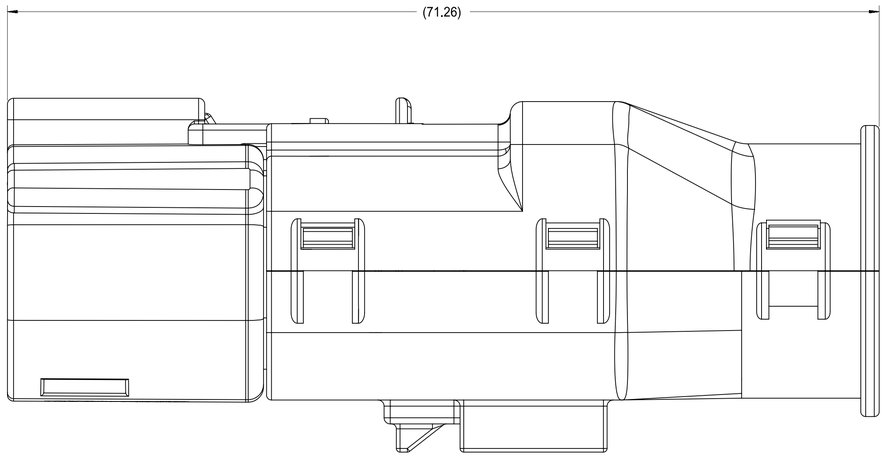

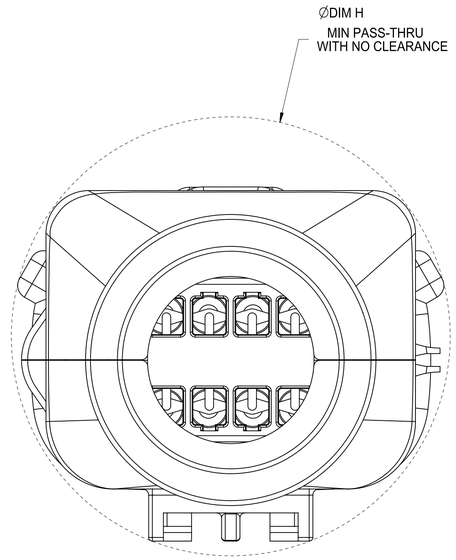

RECEPTACLE SEALED ASSEMBLY WITH RECEPTACLE BACKSHELL

THIS DRAWING CONTAINS INFORMATION THAT IS PROPRIETARY TO MOLEX ELECTRONIC TECHNOLOGIES, LLC AND SHOULD NOT BE USED WITHOUT WRITTEN PERMISSION

FUNCTIONAL SYMBOLS	DIMENSION UNITS	SCALE
FA = 0	MM	4:1
FC = 0	GENERAL TOLERANCES (UNLESS SPECIFIED)	
FP = 0	ANGULAR TOL	± 1°
DIVISIONAL SYMBOLS	4 PLACES	±
	3 PLACES	±
	2 PLACES	± 0.100
	1 PLACE	± 0.20
	0 PLACES	±
	DRAFT WHERE APPLICABLE MUST REMAIN WITHIN DIMENSIONS	

CURRENT REV DESC: SEE REVISION TABLE

STATUS: Production
DRWN: Yuki Song 2025-07-16
CHK'D: Elvis Song 2025-07-17
APPR: Isong05 2025-07-17

THIRD ANGLE PROJECTION | DRAWING: A1-SIZE | SERIES: 33472

molex

MX150 RCPT
DUAL ROW SEALED ASSEMBLY

PRODUCT CUSTOMER DRAWING

DOCUMENT NUMBER	DOC TYPE	DOC PART	REVISION
SD-33472-0001	PSD	001	C11

MATERIAL NUMBER | CUSTOMER: GENERAL MARKET | SHEET NUMBER: 9 OF 11

FORMAT: TC-large-pdf-A1
REVISION: B
DATE: 2022/08/01

SHEET DESCRIPTION
MOLEX BACKSHELL CONFIGURATIONS

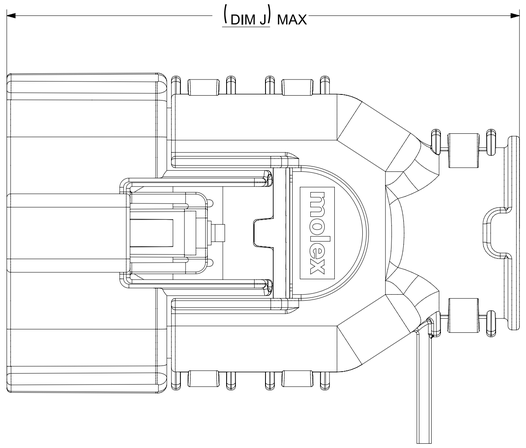

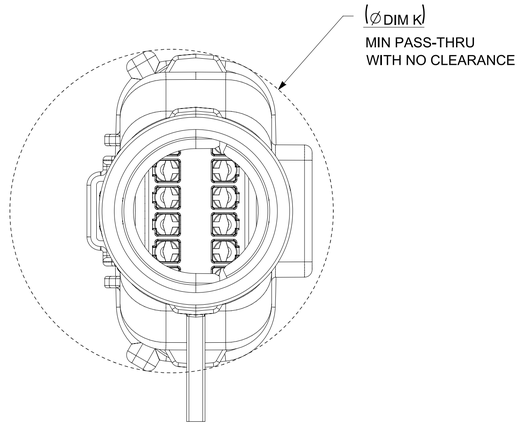

RECEPTACLE SEALED ASSEMBLY WITH RECEPTACLE BACKSHELL

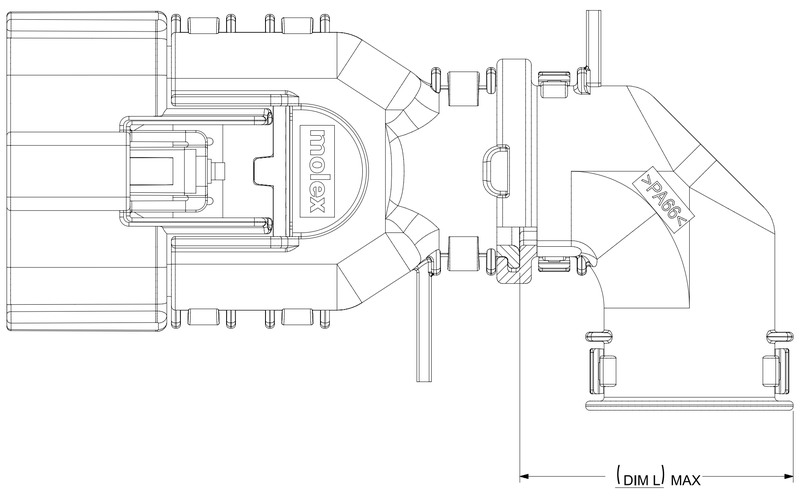

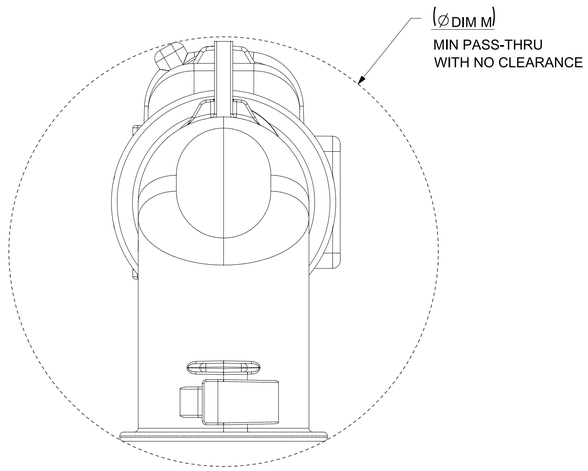

ADD THE VALUE OF 'L' TO THE TOTAL DIMENSION
WHENEVER ADAPTOR IS USED

CHARTED DIMENSIONS

	DESCRIPTION	DIMENSIONS			
		J	K	L	M
	2X2 W/O CLIPSLOT	TBD	TBD	TBD	TBD
B	2X2 W/ CLIP SLOT	TBD	TBD	TBD	TBD
	2X2 LENGTHENED	TBD	TBD	TBD	TBD
	2X4 W/ CLIPSLOT	58.39	32.85	32.10	44.26
	2X4 W/O CLIPSLOT	N/A	N/A	N/A	N/A
	2X8 W/ CLIPSLOT	67.19	42.65	36.10	56.49
B	2X8 W/O CLIPSLOT	N/A	N/A	N/A	N/A
	2X10 W/ CLIPSLOT	67.19	42.65	36.10	56.49
C	2X10 W/O CLIPSLOT	N/A	N/A	N/A	N/A

THIS DRAWING CONTAINS INFORMATION THAT IS PROPRIETARY TO MOLEX ELECTRONIC TECHNOLOGIES, LLC AND SHOULD NOT BE USED WITHOUT WRITTEN PERMISSION

FUNCTIONAL SYMBOLS
FA = 0
FC = 0
FP = 0

DIVISIONAL SYMBOLS

DIMENSION UNITS	SCALE
MM	2.5:1

GENERAL TOLERANCES (UNLESS SPECIFIED)

ANGULAR TOL	± 1°
4 PLACES	±
3 PLACES	±
2 PLACES	± 0.100
1 PLACE	± 0.20
0 PLACES	±

DRAFT WHERE APPLICABLE MUST REMAIN WITHIN DIMENSIONS

CURRENT REV DESC: SEE REVISION TABLE

STATUS: Production
DRWN: Yuki Song 2025-07-16
CHK'D: Elvis Song 2025-07-17
APPR: Isong05 2025-07-17

THIRD ANGLE PROJECTION

DRAWING	SERIES
A1-SIZE	33472

molex

MX150 RCPT
DUAL ROW SEALED ASSEMBLY

PRODUCT CUSTOMER DRAWING

DOCUMENT NUMBER	DOC TYPE	DOC PART	REVISION
SD-33472-0001	PSD	001	C11

MATERIAL NUMBER	CUSTOMER	SHEET NUMBER
	GENERAL MARKET	10 OF 11

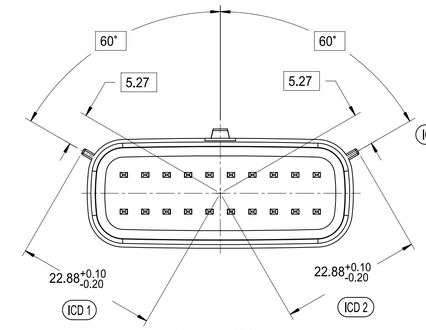

KEYING OPTION A
SCALE 4:1

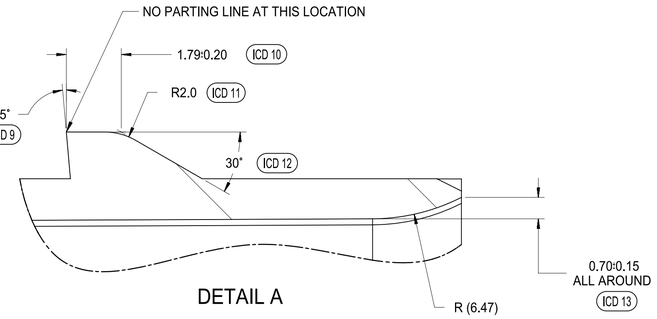

DETAIL A
SCALE 10:1

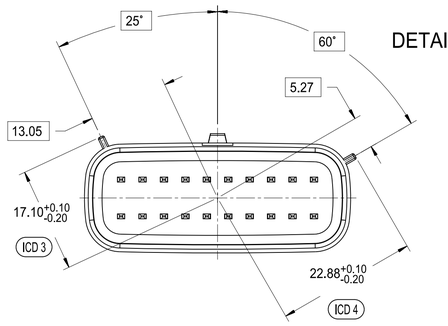

KEYING OPTION B
SCALE 4:1

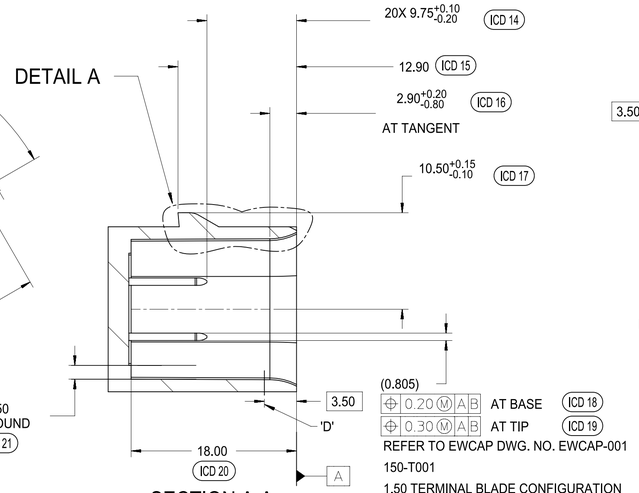

0.20 M A B AT BASE ICD 18
0.30 M A B AT TIP ICD 19
REFER TO EWCAP DWG. NO. EWCAP-001
150-T001
1.50 TERMINAL BLADE CONFIGURATION

SECTION A-A

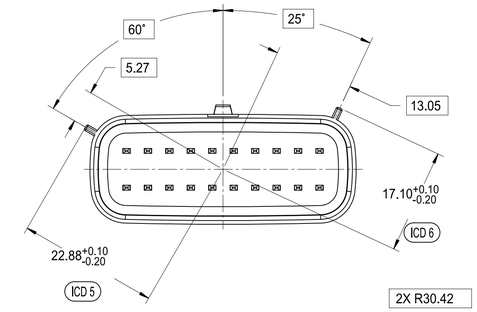

KEYING OPTION C
SCALE 4:1

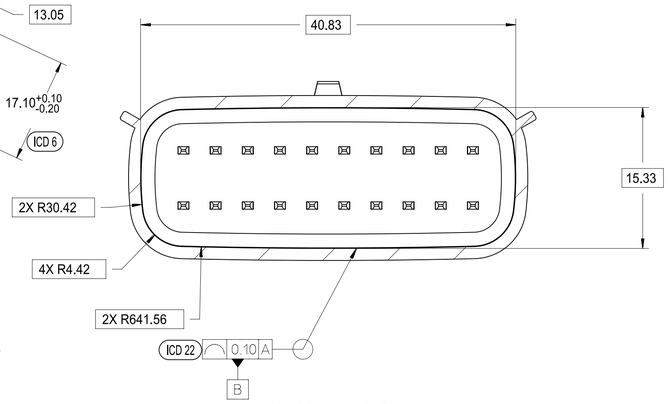

SECTION C-C

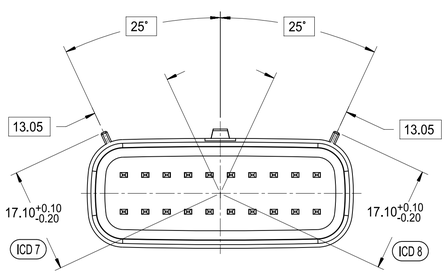

KEYING OPTION D
SCALE 4:1

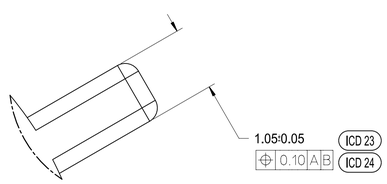

DETAIL C
SCALE 20:1
APPLIES 2X
SEE KEYING OPTION VIEWS
FOR POSITIONS

IF HEADER IS RECESSED INTO A POCKET, THESE DIMENSIONS REPRESENT
THE MINIMUM CLEARANCE REQUIRED FOR THE MATING CONNECTOR SHROUD

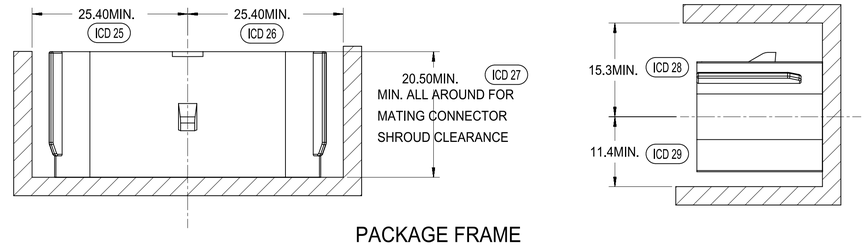

PACKAGE FRAME

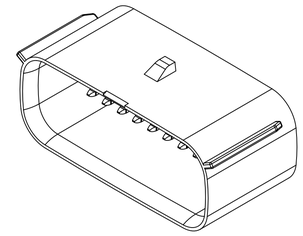

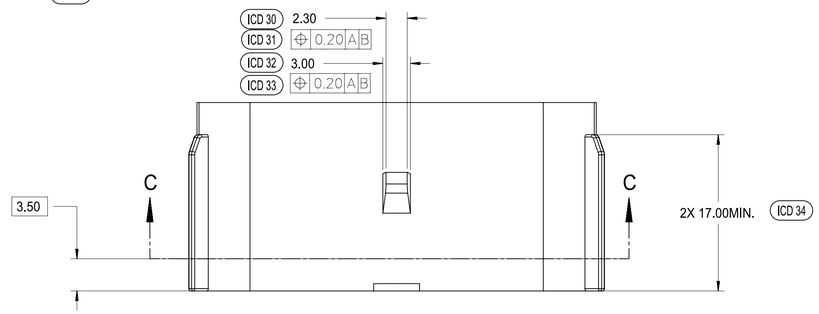

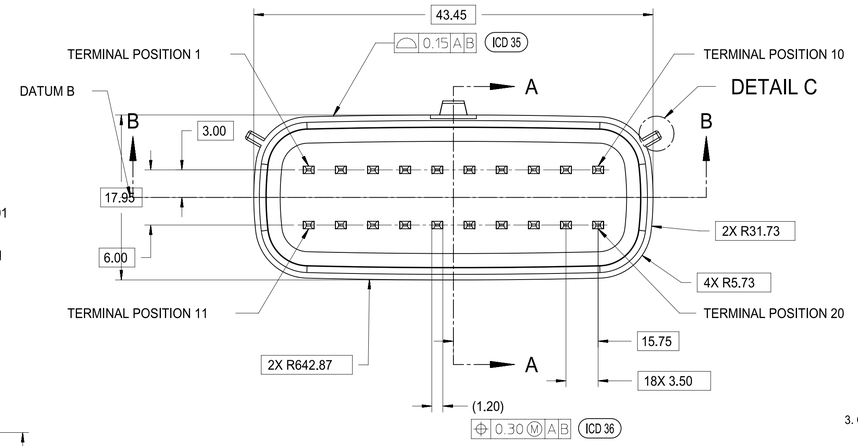

REFER TO EWCAP DWG. NO. EWCAP-001
150-T001
1.50 TERMINAL BLADE CONFIGURATION

SURFACE MUST BE FREE
OF SURFACE DEFECTS AND
PARTING LINES FOR
SEALING ALL AROUND

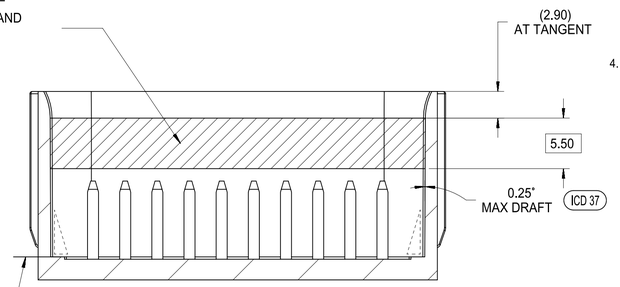

CONSTRUCTION BELOW THIS SURFACE IS
NOT CONTROLLED BY EWCAP. NO PLASTIC
FEATURES MAY EXTEND ABOVE THIS SURFACE.

SECTION B-B

MATING INTERFACE NOTES: VALID UNLESS OTHERWISE SPECIFIED

1. GENERAL:
   a. DESIGNED TO MATE WITH MOLEX CONNECTOR 33472-2XXX & 160008-0XXX & 160074-0XXX
      A FULL SHROUD ON THE MATING CONNECTOR IS REQUIRED TO INSURE THAT THE CONNECTOR-HEADER POLARIZATION FEATURES (OPTIONS A THRU D) WILL FUNCTION. THE FULL SHROUD ALSO PREVENTS SCOOP DAMAGE TO THE HEADER PINS. REFER TO 'SAE/USCAR-12 CONNECTOR DESIGN GUIDE LINES' FOR ADDITIONAL INFORMATION
   b. PARTS MUST BE IN COMPLIANCE TO MOLEX CHEMICAL SUBSTANCES FOR PRODUCTS AND PACKAGING SPECIFICATION: ES-40000-5016
   c. FLAMMABILITY REQUIREMENT: PER ISO3795 OR GM3191
      1. BURN RATE 100mm/MIN MAXIMUM
      2. MATERIAL MUST BE SELF EXTINGUISHING

2. MATERIALS:
   a. MATERIAL: SPS/NYLON GF20, REGRIND 20% MAX BY WEIGHT
   b. STANDARD COLORS FOR POLARIZATION (SEE KEYING OPTIONS TABLE). DEVIATION REQUIRES APPROVAL OF AUTHORIZED PERSON
   c. FOR BLADE BASE MATERIAL, PLATING AND PROCESS LUBRICANT:
      1. TIN: - BASE MATERIAL:COPPER ALLOY, CONDUCTIVITY >=60% IACS AT 20°C;
         TENSILE STRENGTH >= 410 N/mm²P - BARRIER MATERIAL: NICKEL DEPOSIT FROM NICKEL SULFAMATE PLATING SOLUTION W/O ANY ADDITIVES
         THICKNESS: 1.25 - 2.25 MICROMETERS
         - TOP LAYER: 100% ELECTRO-DEPOSITED TIN, MATTE FINISH
         THICKNESS: 2.5 - 4.0 MICROMETERS
      2. SILVER: - BARRIER MATERIAL: ELECTRO-DEPOSITED DUCTILE SULPHAMATE NICKEL
         THICKNESS: 1.25 - 2.25 MICROMETERS
         - TOP LAYER: ELECTRO-DEPOSITED SEMI-BRIGHT PURE SILVER (0.5% MAX IMPURITIES) OVER NICKEL ANTI-TARNISH TREATMENT EVERBRIGHT WS
         THICKNESS: 1.9 - 3.3 MICROMETERS
      3. BLADES MUST CONFORM TO ES-40000-5007, EXCEPT FOR SPECULAR REFLECTIVITY - SECTION 6.0
      4. ANY PROCESS LUBRICANT REMAINING ON THE TERMINAL MUST NOT VARNISH OR DEGRADE IT'S ELECTRICAL PERFORMANCE UP TO A MAXIMUM CLASS AMBIENT TERMPERATURE PER SAE USCAR-2 FOR 1008 HOURS, PROCESS LUBRICANTS SHOULD BE APPROVED BY THE RESPONSIBLE ENGINEER.
      5. INFORMATION FOR BLADE DESIGN WAS DEVELOPED FROM EWCAP DWG: EWCAP-001

3. GEOMETRY:
   a. THIS IS A 100% CAD GENERATED PART. THE CAD MATHEMATICAL DATA IS THE MASTER FOR THIS PART. FOR DIMENSIONAL OR ANY INFORMATION NOT SHOWN ON THIS DRAWING, ANALYZE THE CAD MODEL.
   b. GEOMETRIC DIMENSIONS AND TOLERANCES PER ASME Y14.5M - 1994
   c. GENERAL TOLERANCES: SEE TITLE BLOCK
   d. EDGES AND UNDIMENSIONED DETAILS PER ISO13715

4. MANUFACTURING:
   a. DRAFT TO BE WITHIN TOLERANCE.
      PLUS DRAFT - INDICATES A DIMENSION REPRESENTS THE SMALLEST SIZE OF A FEATURE. DRAFT WILL ADD MATERIAL.
      MINUS DRAFT - INDICATES A DIMENSION REPRESENTS THE LARGEST SIZE OF A FEATURE. DRAFT WILL REMOVE MATERIAL.
   b. ALLOWABLE FLASH MAX 0.20 HIGH BY MAX 0.13 THICK.
   c. ALLOWABLE SPLIT/PARTING LINE MISMATCH 0.2 MAX.
   d. VISUAL DEFECTS SHALL MEET COSMETIC STANDARD PS-45499-002 (Class B)
   e. NO EXTERNAL MOLD RELEASE AGENT ALLOWED DURING MANUFACTURING
   f. NO PARTING LINES, NO DRAFT, MISMATCHES OR EJECTOR MARKS PERMISSIBLE WITHIN SEALING SURFACE. SEALING SURFACE TOOLING TO BE PROCESSED TO A SURFACE FINISH OF NTMA #70 (400 PAPER) MINIMUM

P/N	OPTION	MATING CONNECTOR COLOR
150-S-020-2-D02	D	STONE GRAY
150-S-020-2-C02	C	DK GRAY
150-S-020-2-B02	B	LT GRAY
150-S-020-2-A02	A	BLACK

THIS DRAWING CONTAINS INFORMATION THAT IS PROPRIETARY TO MOLEX ELECTRONIC TECHNOLOGIES, LLC AND SHOULD NOT BE USED WITHOUT WRITTEN PERMISSION

FUNCTIONAL SYMBOLS: FA = 0, FC = 0, FP = 0
DIVISIONAL SYMBOLS

DIMENSION UNITS	SCALE
MM	1:1

GENERAL TOLERANCES (UNLESS SPECIFIED)

ANGULAR TOL	± 1°
4 PLACES	±
3 PLACES	±
2 PLACES	± 0.100
1 PLACE	± 0.20
0 PLACES	±

DRAFT WHERE APPLICABLE MUST REMAIN WITHIN DIMENSIONS

CURRENT REV DESC: SEE REVISION TABLE

STATUS: Production
DRWN: Yuki Song 2025-07-16
CHK'D: Elvis Song 2025-07-17
APPR: Isong05 2025-07-17

THIRD ANGLE PROJECTION | DRAWING: A1-SIZE | SERIES: 33472

molex

MX150 RCPT
DUAL ROW SEALED ASSEMBLY

PRODUCT CUSTOMER DRAWING

DOCUMENT NUMBER	DOC TYPE	DOC PART	REVISION
SD-33472-0001	PSD	001	C11

MATERIAL NUMBER | CUSTOMER: GENERAL MARKET | SHEET NUMBER: 11 OF 11

FORMAT: TCdesignA1
SIZE: 841x594
DATE: 2020/06/01

TABLE OF CONTENTS	
SHEET NO.	SHEET DESCRIPTION
1	NOTES AND BOM
2	CPA DETAIL

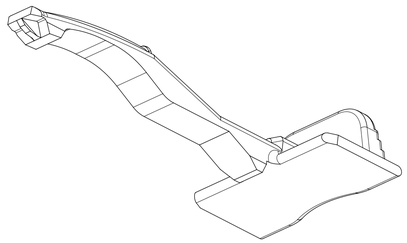

SCALE 5:1

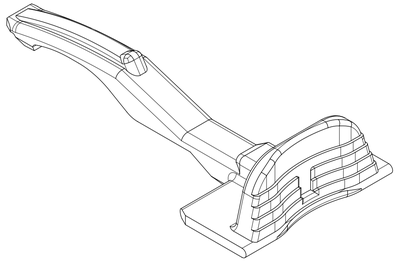

SCALE 5:1

CPA NOTES: VALID UNLESS OTHERWISE SPECIFIED

1. GENERAL:
a. APPLICATION SPECIFICATION SEE: AS-33611-001 AND AS-33472-100
DESIGNED TO MATE WITH RECEPTACLE SEALED ASSEMBLY AS SPECIFIED IN THE BOM
b. PRODUCT SPECIFICATION SEE: PS-33472-000 AND PS-33471-000 AND PS-33476-000.
c. PACKAGING SPECIFICATION SEE: PK-30907-812.
d. PARTS MUST BE IN COMPLIANCE TO MOLEX CHEMICAL SUBSTANCES FOR PRODUCTS AND PACKAGING SPECIFICATION: QEHS-699000-300
e. DATA MUST BE SUBMITTED UNDER THE MOLEX PART NUMBER TO IMDS (COMPANY ID#13255)

2. DESIGN - MATERIALS:
a. PBT GF30
b. RED

3. DESIGN GEOMETRY:
a. THIS IS A 100% CAD GENERATED PART. THE CAD MATHEMATICAL DATA IS THE MASTER FOR THIS PART. FOR DIMENSIONAL OR ANY INFORMATION NOT SHOWN ON THIS DRAWING, ANALYZE THE CAD MODEL.
b. GEOMETRIC DIMENSIONS AND TOLERANCES PER ASME Y14.5M - 1994
c. EDGES AND UNDIMENSIONED DETAILS PER ISO13715
d. CORNERS SHOWN AS SHARP TO BE R 0.2 MAX.
e. VISUAL DEFECTS SHALL MEET COSMETIC STANDARDS PS-45499-002 (CLASS B).

MOLEX PART NUMBER	STATUS	MATING ASSEMBLY DESCRIPTION	MATING ASSEMBLY DRAWING
33611-0001	SALEABLE	MX150 1X2 WAY RECEPTACLE MAT SEAL	SD-33471-021
		MX150 1X3 WAY RECEPTACLE MAT SEAL	SD-33471-031
		MX150 1X4 WAY RECEPTACLE MAT SEAL	SD-33471-041
		MX150 1X5 WAY RECEPTACLE MAT SEAL	SD-33471-051
		MX150 1X6 WAY RECEPTACLE MAT SEAL	SD-33471-061
		MX150 2X2 WAY RECEPTACLE MAT SEAL	SD-33472-041
		MX150 2X3 WAY RECEPTACLE MAT SEAL	SD-33472-061
		MX150 2X3 WAY RECEPTACLE MAT SEAL W/CLIPSLOT	SD-33472-071
		MX150 2X4 WAY RECEPTACLE MAT SEAL	SD-33472-081
		MX150 2X4 WAY RECEPTACLE MAT SEAL W/CLIPSLOT	SD-33472-091
		MX150 2X6 WAY RECEPTACLE MAT SEAL	SD-33472-121
		MX150 2X6 WAY RECEPTACLE MAT SEAL W/CLIPSLOT	SD-33472-131
		MX150 2X8 WAY RECEPTACLE MAT SEAL	SD-33472-161
		MX150 2X10 WAY RECEPTACLE MAT SEAL	SD-33472-201
		MX150 HYBRID 16 WAY	SD-33476-161
		MX150 HYBRID 16 WAY W/CLIP SLOT	SD-33476-181

REV	DESCRIPTION
A3	DOCUMENT TYPE CHANGED FROM SD-33611-001 PDD TO SD-33611-001 PSD
A2	NX RE-MASTERING
A	INITIAL RELEASE

SYMBOLS	
A = 0	
E = 0	
B = 0	
S = 0	
= 0	
C = 0	
= 0	
= 0	
V = 0	

THIS DRAWING CONTAINS INFORMATION THAT IS PROPRIETARY TO MOLEX ELECTRONIC TECHNOLOGIES, LLC AND SHOULD NOT BE USED WITHOUT WRITTEN PERMISSION

DIMENSION UNITS	SCALE
mm	10:1

GENERAL TOLERANCES (UNLESS SPECIFIED)		
ANGULAR TOL	±	3.0 °
4 PLACES	±	
3 PLACES	±	
2 PLACES	±	0.1
1 PLACE	±	0.3
0 PLACES	±	

DRAFT WHERE APPLICABLE MUST REMAIN WITHIN DIMENSIONS

CURRENT REV DESC:

EC NO: 620500
DRWN: MSELANGOVAN 2019/07/02
CHK'D: KBORUSZEWSKI 2019/07/11
APPR: MVANSLAMBROU 2019/07/13

INITIAL REVISION:
DRWN: RELEASE 2019/06/26
APPR: MVANSLAMBROU 2019/07/13

molex

1.5MM STANDARD CONNECTOR
CONNECTOR POS. ASSURANCE

PRODUCT CUSTOMER DRAWING

THIRD ANGLE PROJECTION	DRAWING	SERIES	MATERIAL NUMBER	CUSTOMER	SHEET NUMBER
	D-SIZE	33611	SEE BOM	GENERAL MARKET	1 OF 2

DOCUMENT NUMBER	DOC TYPE	DOC PART	REVISION
SD-33611-001	PSD	001	A3

DOCUMENT STATUS	P1	RELEASE DATE	2019/07/13 12:33:05

FORMAT: master-tb-prod-D
REVISION: 11
DATE: 2018/01/16

CPA DETAIL

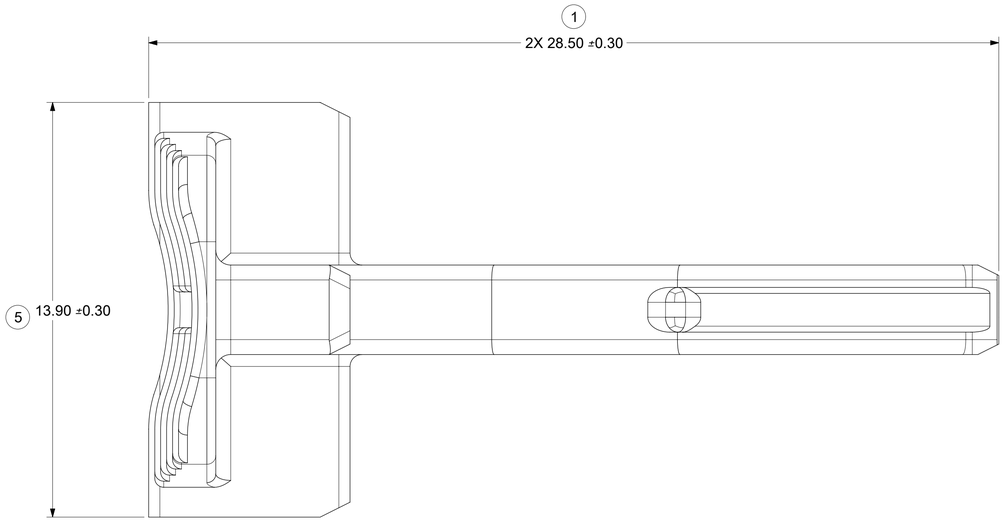

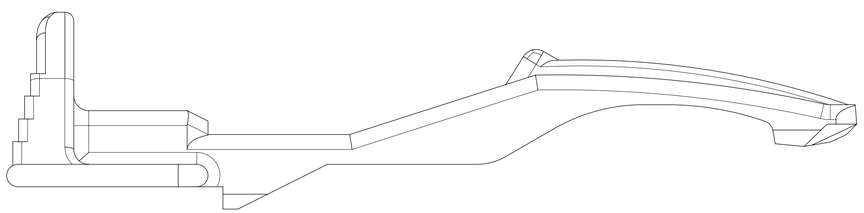

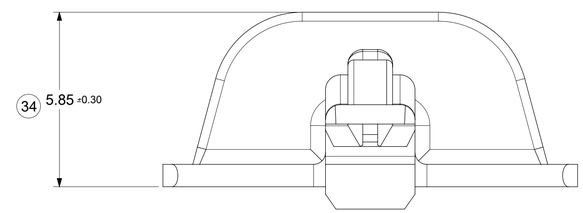

SYMBOLS	
E =	0
E =	0
E =	0
S =	0
=	0
C =	0
=	0
=	0
V =	0

THIS DRAWING CONTAINS INFORMATION THAT IS PROPRIETARY TO MOLEX ELECTRONIC TECHNOLOGIES, LLC AND SHOULD NOT BE USED WITHOUT WRITTEN PERMISSION

DIMENSION UNITS	SCALE
mm	10:1

GENERAL TOLERANCES (UNLESS SPECIFIED)

ANGULAR TOL	±	3.0 °
4 PLACES	±	
3 PLACES	±	
2 PLACES	±	0.1
1 PLACE	±	0.3
0 PLACES	±	

DRAFT WHERE APPLICABLE MUST REMAIN WITHIN DIMENSIONS

CURRENT REV DESC:

EC NO: 620500
DRWN: MSELANGOVAN 2019/07/02
CHK'D: KBORUSZEWSKI 2019/07/11
APPR: MVANSLAMBROU 2019/07/13

INITIAL REVISION:
DRWN: RELEASE 2019/06/26
APPR: MVANSLAMBROU 2019/07/13

THIRD ANGLE PROJECTION | DRAWING: D-SIZE | SERIES: 33611

molex

1.5MM STANDARD CONNECTOR
CONNECTOR POS. ASSURANCE

PRODUCT CUSTOMER DRAWING

DOCUMENT NUMBER	DOC TYPE	DOC PART	REVISION
SD-33611-001	PSD	001	A3

MATERIAL NUMBER	CUSTOMER	SHEET NUMBER
SEE BOM	GENERAL MARKET	2 OF 2

DOCUMENT STATUS	P1	RELEASE DATE	2019/07/13 12:33:05

TEMPLATE: mpdm-fb-prod-v7
REVISION: R
DATE: 2019-04-18