MAT'L NO (LOOSE PC)	ENG NO (LOOSE PC)	MAT'L NO (ON TAPE)	ENG NO (ON TAPE)	STUD SIZE	∅"S" ±.010 (0.25)
191640006	SA-235-06	191641155	SA-235-06T	6	.146 (3.71)
191640007	SA-235-08	191641156	SA-235-08T	8	.173 (4.39)
191640008	SA-235-10	191641157	SA-235-10T	10	.198 (5.03)

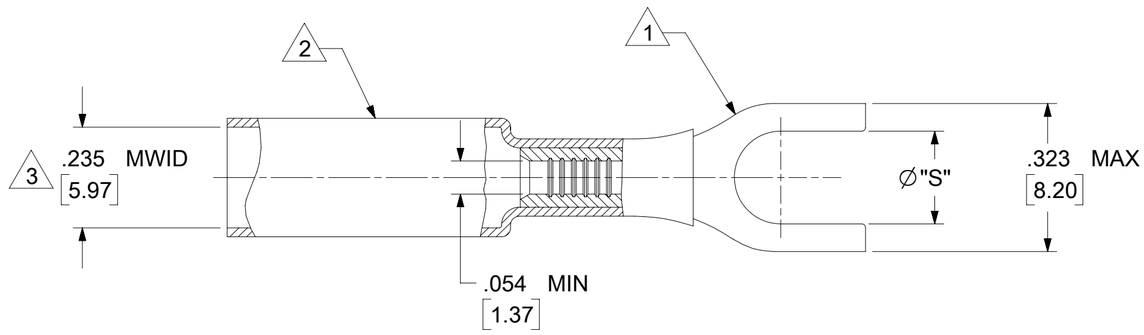

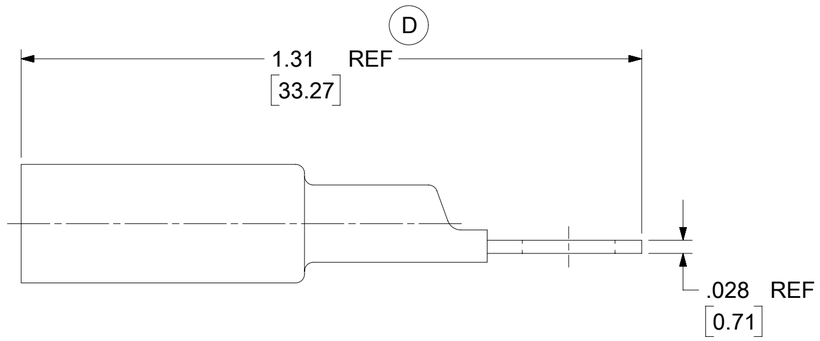

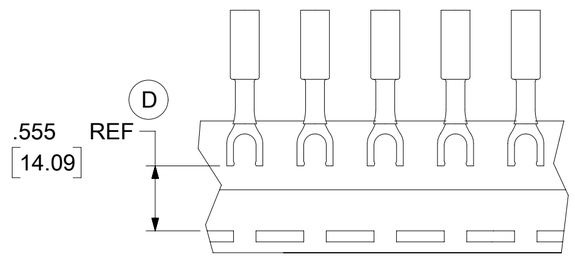

PARTS ON TAPE

NOTES:
1. TERMINAL MATERIAL: TIN PLATED COPPER
2. INSULATION MATERIAL: HEAT SHRINKABLE TUBING WITH HOTMELT ADHESIVE LINER. COLOR: RED.
3. MWID = MAXIMUM WIRE INSULATION DIAMETER.
4. MUST BE RoHS COMPLIANT.

THIS DRAWING CONTAINS INFORMATION THAT IS PROPRIETARY TO MOLEX ELECTRONIC TECHNOLOGIES, LLC AND SHOULD NOT BE USED WITHOUT WRITTEN PERMISSION

SYMBOLS: = 0 / = 0 / = 0 / = 0 / = 0 / = 0 / = 0 / = 0

DIMENSION UNITS: IN/MM
SCALE: NTS

GENERAL TOLERANCES (UNLESS SPECIFIED)

	MM	INCH
4 PLACES	±	±
3 PLACES	±	±
2 PLACES	±	±
1 PLACE	±	±
0 PLACES	±	±
ANGULAR TOL	± °	

DRAFT WHERE APPLICABLE MUST REMAIN WITHIN DIMENSIONS

CURRENT REV DESC: MADE DIMS REF

EC NO: 803695
DRWN: DEANNM1 2024/11/01
CHK'D: ETHRODAHL 2024/11/11
APPR: ETHRODAHL 2024/11/11

INITIAL REVISION:
DRWN: ASAYDEH 2013/05/12
APPR: RDEROSS 2013/05/12

THIRD ANGLE PROJECTION | DRAWING: C-SIZE | SERIES: 19164

molex

SPADE TERMINAL
NIAC 22-18 AWG

PRODUCT CUSTOMER DRAWING

DOCUMENT NUMBER	DOC TYPE	DOC PART	REVISION
SD-19164-025	PSD	001	D

MATERIAL NUMBER	CUSTOMER	SHEET NUMBER
SEE CHART	GENERAL MARKET	1 OF 1

DOCUMENT STATUS	P1	RELEASE DATE	2024/11/11 14:28:59

FORMAT: Eng-lega-master-tb-prod-C
REVISION: D
DATE: 2018/01/18