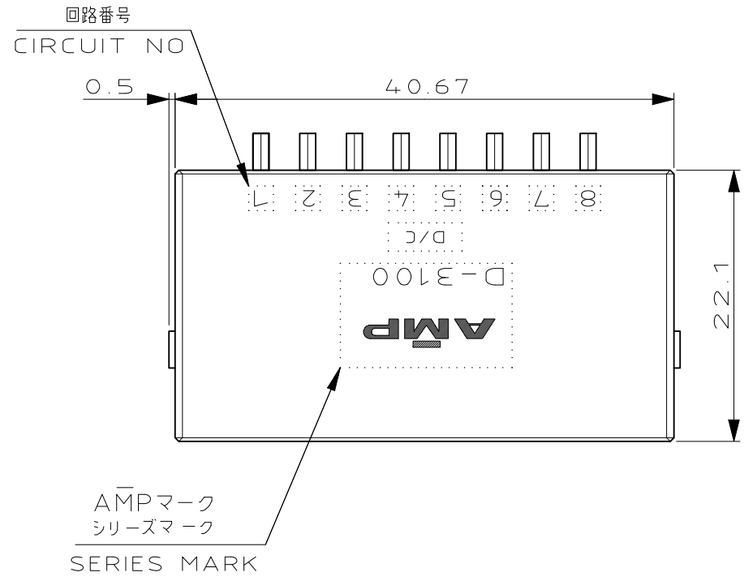

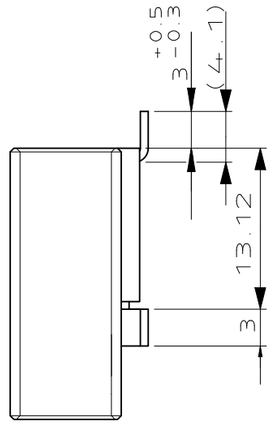

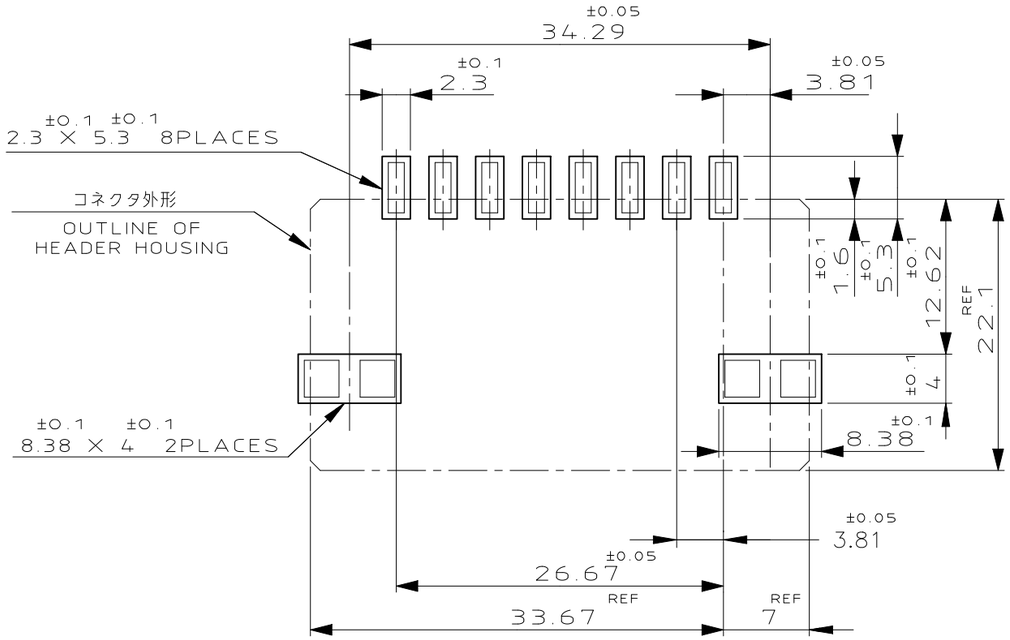

推奨基板取付け寸法

（非累積公差）
（コネクタ搭載面）

RECOMEND BOARD PATTERN
(NOT ACCUMULATE TOLERANCE)
(CONNECTOR MOUNT SIDE)

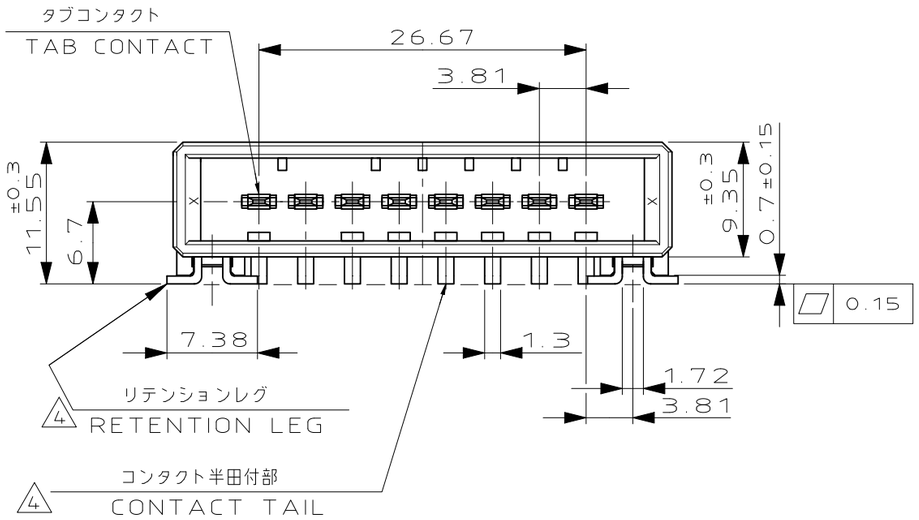

NOTES

1. MATERIAL:HOUSING:GLASS FILED THERMO PLASTIC ,UL94V-0
   CONTACT:COPPER ALLOY
   RETENTION LEG:COPPER ALLOY
2. FINISH(CONTACT AREA):0.38μm PdNi & Au PLATING OVER NICKEL
3. FINISH(CONTACT AREA):0.76μm PdNi & Au PLATING OVER NICKEL
4. FINISH(RETENTION LEG): TIN PLATED (SOLDER TYING) OVER NICKEL

4 3	1-179188-3
4 2	1-179188-2
(FINISH)	製品番号 (PART NO.)

LTR	REVISION RECORD	DR	CHK	DATE
B	REVISED PER ECR-25-250800	FZ	RB	03JAN 2025
A	REVISED FJD0-0039-03	TS		
0	RELEASED FJ00-0450-93	NM	SM	'93 8/20

Copyright © 1993
AMP(Japan) LTD.
ALL RIGHTS RESERVED.

TE Connectivity

WIRE RANGE	mm²(AWG −)
INSULATION DIA	− mmφ
MATERIAL	SEE NOTE 注記参照
FINISH	SEE NOTE 注記参照
DR.	18 AUG 93 N.Matsulara
DE.	18 AUG 93 N.Matsulara
CHK.	20 AUG 93 S.MANABE
APP.	20 AUG 93 S.MANABE

NAME: 8 POS SINGLE ROW SMT TYPE HORIZONTAL HDR ASS'Y FOR DYNAMIC 3100

一般公差 (GENERAL TOLERANCE)
10以下 : ±0.2
10を超え 30以下 : ±0.3
30を超え100以下 : ±0.4
角度 : ±3°

SIZE	LOC	NUMBER
A3	J	C-179188

SCALE	REV.	SHEET
2-1	B	1 OF 1

(CUSTOMER DRAWING) 顧客用図面

NUMBER 179188
3rd ANGLE PROJECTION
METRIC
PROJ NO.393-611
DIMENSIONS IN MILLIMETERS. DO NOT SCALE PRINT
PRINT DIST

AMP-J
REV.10/'83