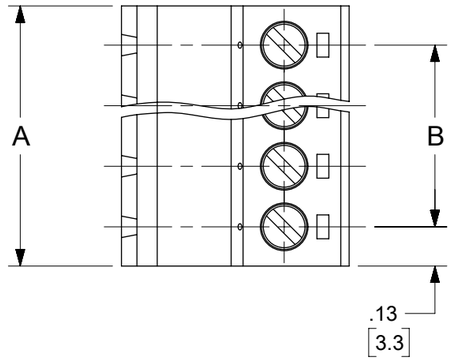


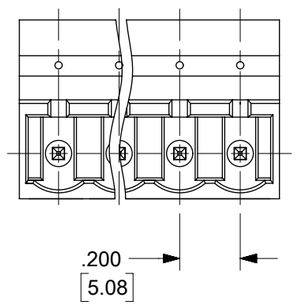


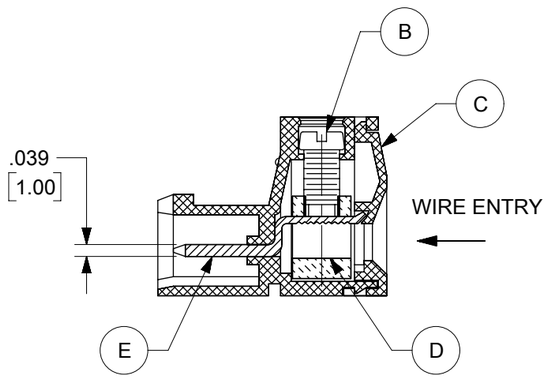


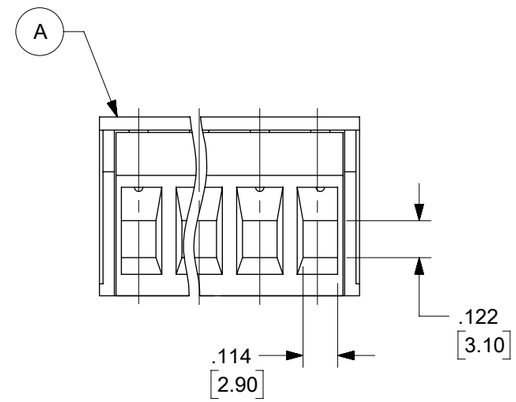


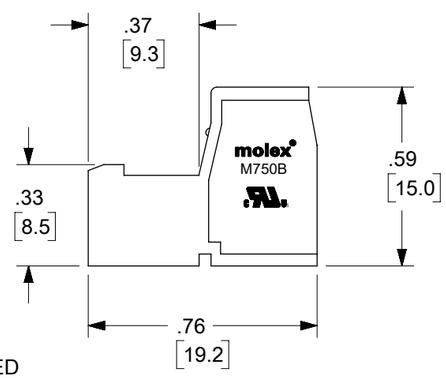


## PART NUMBER DATA

| CIRCUITS | PART NUMBER | ENGINEERING NUMBER | HOUSING COLOR | PART NUMBER | ENGINEERING NUMBER | HOUSING COLOR | A IN | A mm | B IN | B mm |
|---|---|---|---|---|---|---|---|---|---|---|
| 2 | 397150002 | M750B-16-2-02-3 | GREEN | 397151002 | M750B-16-2-02-1 | BLACK | 0.46 | 11.7 | 0.200 | 5.08 |
| 3 | 397150003 | M750B-16-2-03-3 | GREEN | | M750B-16-2-03-1 | BLACK | 0.66 | 16.7 | 0.400 | 10.16 |
| 4 | 397150004 | M750B-16-2-04-3 | GREEN | | M750B-16-2-04-1 | BLACK | 0.86 | 21.8 | 0.600 | 15.24 |
| 5 | 397150005 | M750B-16-2-05-3 | GREEN | | M750B-16-2-05-1 | BLACK | 1.06 | 26.9 | 0.800 | 20.32 |
| 6 | 397150006 | M750B-16-2-06-3 | GREEN | | M750B-16-2-06-1 | BLACK | 1.26 | 32.0 | 1.000 | 25.40 |
| 7 | 397150007 | M750B-16-2-07-3 | GREEN | | M750B-16-2-07-1 | BLACK | 1.46 | 37.1 | 1.200 | 30.48 |
| 8 | 397150008 | M750B-16-2-08-3 | GREEN | | M750B-16-2-08-1 | BLACK | 1.66 | 42.1 | 1.400 | 35.56 |
| 9 | 397150009 | M750B-16-2-09-3 | GREEN | | M750B-16-2-09-1 | BLACK | 1.86 | 47.2 | 1.600 | 40.64 |
| 10 | 397150010 | M750B-16-2-10-3 | GREEN | | M750B-16-2-10-1 | BLACK | 2.06 | 52.3 | 1.800 | 45.72 |
| 11 | 397150011 | M750B-16-2-11-3 | GREEN | | M750B-16-2-11-1 | BLACK | 2.26 | 57.4 | 2.000 | 50.80 |
| 12 | 397150012 | M750B-16-2-12-3 | GREEN | | M750B-16-2-12-1 | BLACK | 2.46 | 62.5 | 2.200 | 55.88 |
| 13 | | M750B-16-2-13-3 | GREEN | | M750B-16-2-13-1 | BLACK | 2.66 | 67.5 | 2.400 | 60.96 |
| 14 | | M750B-16-2-14-3 | GREEN | | M750B-16-2-14-1 | BLACK | 2.86 | 72.6 | 2.600 | 66.04 |
| 15 | | M750B-16-2-15-3 | GREEN | | M750B-16-2-15-1 | BLACK | 3.06 | 77.7 | 2.800 | 71.12 |
| 16 | | M750B-16-2-16-3 | GREEN | | M750B-16-2-16-1 | BLACK | 3.26 | 82.8 | 3.000 | 76.20 |
| 17 | | M750B-16-2-17-3 | GREEN | | M750B-16-2-17-1 | BLACK | 3.46 | 87.9 | 3.200 | 81.28 |
| 18 | | M750B-16-2-18-3 | GREEN | | M750B-16-2-18-1 | BLACK | 3.66 | 92.9 | 3.400 | 86.36 |
| 19 | | M750B-16-2-19-3 | GREEN | | M750B-16-2-19-1 | BLACK | 3.86 | 98.0 | 3.600 | 91.44 |
| 20 | | M750B-16-2-20-3 | GREEN | | M750B-16-2-20-1 | BLACK | 4.06 | 103.1 | 3.800 | 96.52 |
| 21 | | M750B-16-2-21-3 | GREEN | | M750B-16-2-21-1 | BLACK | 4.26 | 108.2 | 4.000 | 101.59 |
| 22 | | M750B-16-2-22-3 | GREEN | | M750B-16-2-22-1 | BLACK | 4.46 | 113.3 | 4.200 | 106.67 |
| 23 | | M750B-16-2-23-3 | GREEN | | M750B-16-2-23-1 | BLACK | 4.66 | 118.3 | 4.400 | 111.75 |
| 24 | | M750B-16-2-24-3 | GREEN | | M750B-16-2-24-1 | BLACK | 4.86 | 123.4 | 4.600 | 116.83 |

REF. LAST 2 DIGITS OF PART NUMBER EQUALS CIRCUIT COUNT

## TOLERANCES

| MM | TOL | INCH | TOL |
|---|---|---|---|
| 0-6 | ±0.25 | 0-.24 | ±.010 |
| >6-30 | ±0.40 | .24-1.18 | ±.016 |
| >30-120 | ±0.50 | 1.18-4.76 | ±.020 |
| >120 | ±0.80 | >4.76 | ±.031 |

## ENGINEERING NUMBER LEGEND

M750B-16-2-XX-3

SERIES — STYLE — PITCH — POLES — COLOR

CONTACT FACTORY FOR OPTIONAL COLORS

SPECIFICATIONS

1.MATERIAL:
- A. BODY : PA66.UL94 V-0
- B. SCREW: M3, STEEL.ZINC PLATED
- C. COVER: PA66.UL94 V-0
- D. CAGE: BRASS.NI PLATED
- E. TERMINAL :BRASS.TIN PLATED

2.WIRE SIZE: 24 ~ 12AWG
3.RATING: 250V,12A
4.MAX TORQUE : 4.4LBF.IN
5.WIRE STRIP LENGTH: .20in.(5.0mm)
6.OPERATING TEMPERATURE : -40°C TO +105°C
7.DIMS. SHOWN ARE FOR REFERENCE ONLY

THIS DRAWING CONTAINS INFORMATION THAT IS PROPRIETARY TO MOLEX ELECTRONIC TECHNOLOGIES, LLC AND SHOULD NOT BE USED WITHOUT WRITTEN PERMISSION

| DIMENSION UNITS | SCALE |
|---|---|
| INCH/MM | NTS |

GENERAL TOLERANCES (UNLESS SPECIFIED)

| | |
|---|---|
| ANGULAR TOL | ± ° |
| 4 PLACES | ± |
| 3 PLACES | ± |
| 2 PLACES | ± |
| 1 PLACE | ± |
| 0 PLACES | ± |

DRAFT WHERE APPLICABLE MUST REMAIN WITHIN DIMENSIONS

CURRENT REV DESC: RELEASE TO "GENERAL MARKET" RESTRICTION STATUS

EC NO: 773119
DRWN: WLEUNG 2024/01/03
CHK'D: JANEY 2024/01/03
APPR: HKNEELAND 2024/01/04

INITIAL REVISION:
DRWN: MBRZOZOWSKI 2018/09/12
APPR: JFMURPHY 2018/09/12

molex

PLUG, 5.08MM MALE HORIZONTAL

PRODUCT CUSTOMER DRAWING

| DOCUMENT NUMBER | DOC TYPE | DOC PART | REVISION |
|---|---|---|---|
| 397150004 | PSD | 000 | B |

| THIRD ANGLE PROJECTION | DRAWING | SERIES | MATERIAL NUMBER | CUSTOMER | SHEET NUMBER |
|---|---|---|---|---|---|
| | B-SIZE | 39715 | SEE TABLE | | 1 OF 1 |

| DOCUMENT STATUS | P1 | RELEASE DATE | 2024/01/04 23:19:59 |
|---|---|---|---|

FORMAT: master-tb-prod-B
REVISION: J1
DATE: 2021/05/01