THIS DRAWING IS UNPUBLISHED. RELEASED FOR PUBLICATION 20
© COPYRIGHT 20 BY - ALL RIGHTS RESERVED.

REVISIONS

P	LTR	DESCRIPTION	DATE	DWN	APVD
	A3	ECR-20-008040	08JUN2020	S.C	C.W
	A4	ECR-19-006141	02JUL2020	G.W	C.W
	B	ECR-22-132011	19JUL2022	B.P	C.W
	B1	ECR-25-236292	16APR2025	G.W	C.W

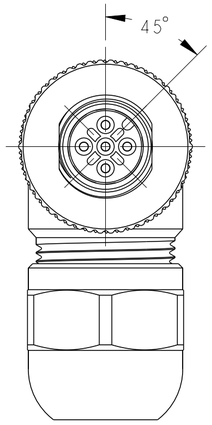

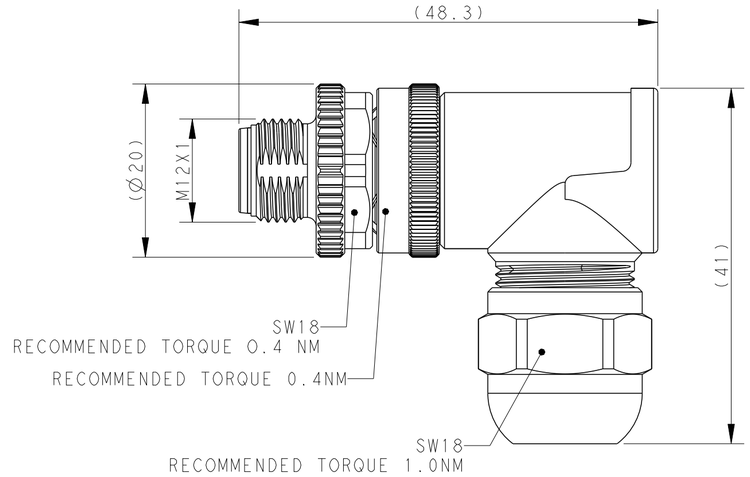

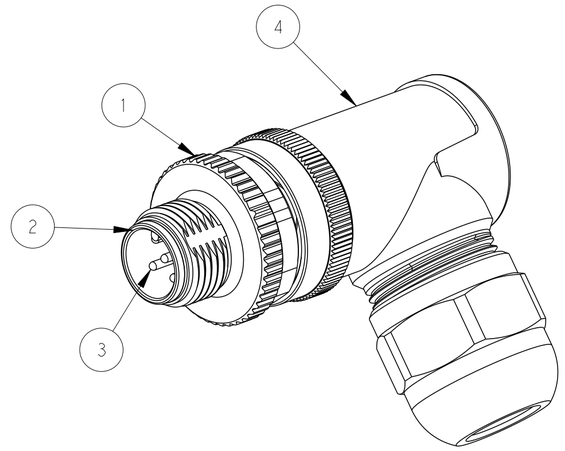

TECHNICAL DATA	T411301X02X-000	T411301X03X-000	T411301X04X-000	T411301X05X-00X	T411301X08X-00X
RATED VOLTAGE	250V	250V	250V	60V	30V
RATED CURRENT	4A	4A	4A	4A	2A
POLLUTION DEGREE	3	3	3	3	3
OVERVOLTAGE CATEGORY	II	II	II	II	II
CONTACT RESISTANCE	≤10mΩ	≤10mΩ	≤10mΩ	≤10mΩ	≤10mΩ
INSULATION RESISTANCE	>100MΩ	>100MΩ	>100MΩ	>100MΩ	>100MΩ
DEGREE OF PROTECTION	IP67	IP67	IP67	IP67	IP67
OPERATION TEMPERATURE	-40~85°C	-40~85°C	-40~85°C	-40~85°C	-40~85°C

PIN ARRANGEMENT
A-CODE

T411301X02X-000

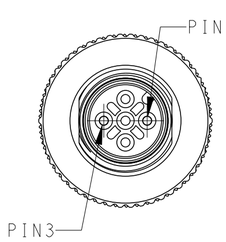

T411301X03X-000

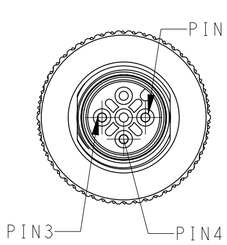

T411301X04X-000

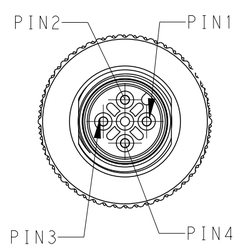

T411301X05X-00X

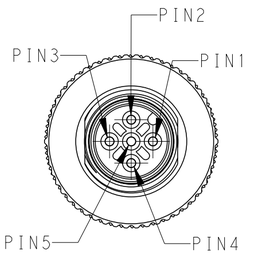

T411301208X-00X

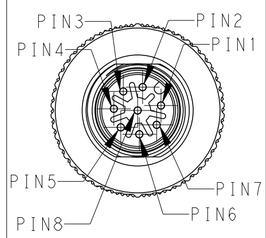

TE PN	TYPE
T4113012081-001	RPC-M12-MR-8CON-PG9-SHU-LN
T4113012051-001	RPC-M12-MR-5CON-PG9-SHU-LN
T4113012081-000	RPC-M12-MR-8CON-PG9-SHU
T4113011081-000	RPC-M12-MR-8CON-PG7-SHU
T4113012082-000	RPC-M12-MR-8CON-PG9-SH
T4113011082-000	RPC-M12-MR-8CON-PG7-SH
T4113012051-000	RPC-M12-MR-5CON-PG9-SHU
T4113011051-000	RPC-M12-MR-5CON-PG7-SHU
T4113012052-000	RPC-M12-MR-5CON-PG9-SH
T4113011052-000	RPC-M12-MR-5CON-PG7-SH
T4113012041-000	RPC-M12-MR-4CON-PG9-SHU
T4113011041-000	RPC-M12-MR-4CON-PG7-SHU
T4113012042-000	RPC-M12-MR-4CON-PG9-SH
T4113011042-000	RPC-M12-MR-4CON-PG7-SH
T4113012031-000	RPC-M12-MR-3CON-PG9-SHU
T4113011031-000	RPC-M12-MR-3CON-PG7-SHU
T4113012032-000	RPC-M12-MR-3CON-PG9-SH
T4113011032-000	RPC-M12-MR-3CON-PG7-SH
T4113012021-000	RPC-M12-MR-2CON-PG9-SHU
T4113011021-000	RPC-M12-MR-2CON-PG7-SHU
T4113012022-000	RPC-M12-MR-2CON-PG9-SH
T4113011022-000	RPC-M12-MR-2CON-PG7-SH

NOTE:
1. MATERIAL:
   ITEM NO.1:NUT -ZINC DIE-CAST,NICKEL PLATED
   ITEM NO.2:HOUSING -PA
   ITEM NO.3:CONTACT -BRONZE
   ITEM NO.4: HOUSING BODY: -BRASS
2. CONTACT FINISH:
   GOLD OVER NICKEL OR SILVER OVER NICKEL
3. CABLE WIRES:
   FOR 2~5 PIN:
   24AWG/0.25mm²...18AWG/0.75mm² (WITHOUT FERRULE)
   26AWG/0.14mm²...20AWG/0.50mm² (WITH FERRULE)
   FOR 8 PIN:
   24AWG/0.25mm²...20AWG/0.50mm² (WITHOUT FERRULE)
   26AWG/0.14mm²...22AWG/0.34mm² (WITH FERRULE)
4. ALLDIMENSIONS ARE FOR NOMINAL REFERENCE ONLY UNLESS OTHERWISE STATED
5. PACKAGEING: 1PIECE IN A BAG
6. PN INFORMATION

T411301XXXX-000
- CONTACT FINISH:
  1: GOLD OVER NICKEL
  2: SILVER OVER NICKEL
- NUMBERS OF PINS:
  02: 2 PINS
  03: 3 PINS
  04: 4 PINS
  05: 5 PINS
  08: 8 PINS
  ...
- CABLE OUTLET:
  1: PG7(CABLE FEED: 4-6mm)
  2: PG9(CABLE FEED: 6-8mm)

THIS DRAWING IS A CONTROLLED DOCUMENT.

DIMENSIONS: mm

TOLERANCES UNLESS OTHERWISE SPECIFIED:
0 PLC ±
1 PLC ±0.25
2 PLC ±0.15
3 PLC ±-
4 PLC ±-
ANGLES ±-

MATERIAL -
FINISH -

DWN 24AUG2015 Nick Pan
CHK 24AUG2015 Kobby Zhao
APVD 24AUG2015 Xiang Xu
PRODUCT SPEC 108-106140
APPLICATION SPEC 114-137144
WEIGHT -

TE Connectivity

NAME M12 MALE, RA, SHIELDED CONNECTOR A CODE, SCREW TERMINAL

SIZE	CAGE CODE	DRAWING NO	RESTRICTED TO
A2	-	C-T411301XXXX000	-

Customer Drawing SCALE 2:1 SHEET 1 OF 1 REV B1

1471-9 (3/13)