THIS DRAWING IS UNPUBLISHED. RELEASED FOR PUBLICATION 20
© COPYRIGHT 20 BY TYCO ELECTRONICS CORPORATION. ALL RIGHTS RESERVED.

LOC	DIST
GE	00

REVISIONS

P	LTR	DESCRIPTION	DATE	DWN	APVD
	0	RLSD PER EC 0K40-0431-04	21DEC2004	RDW	LLV

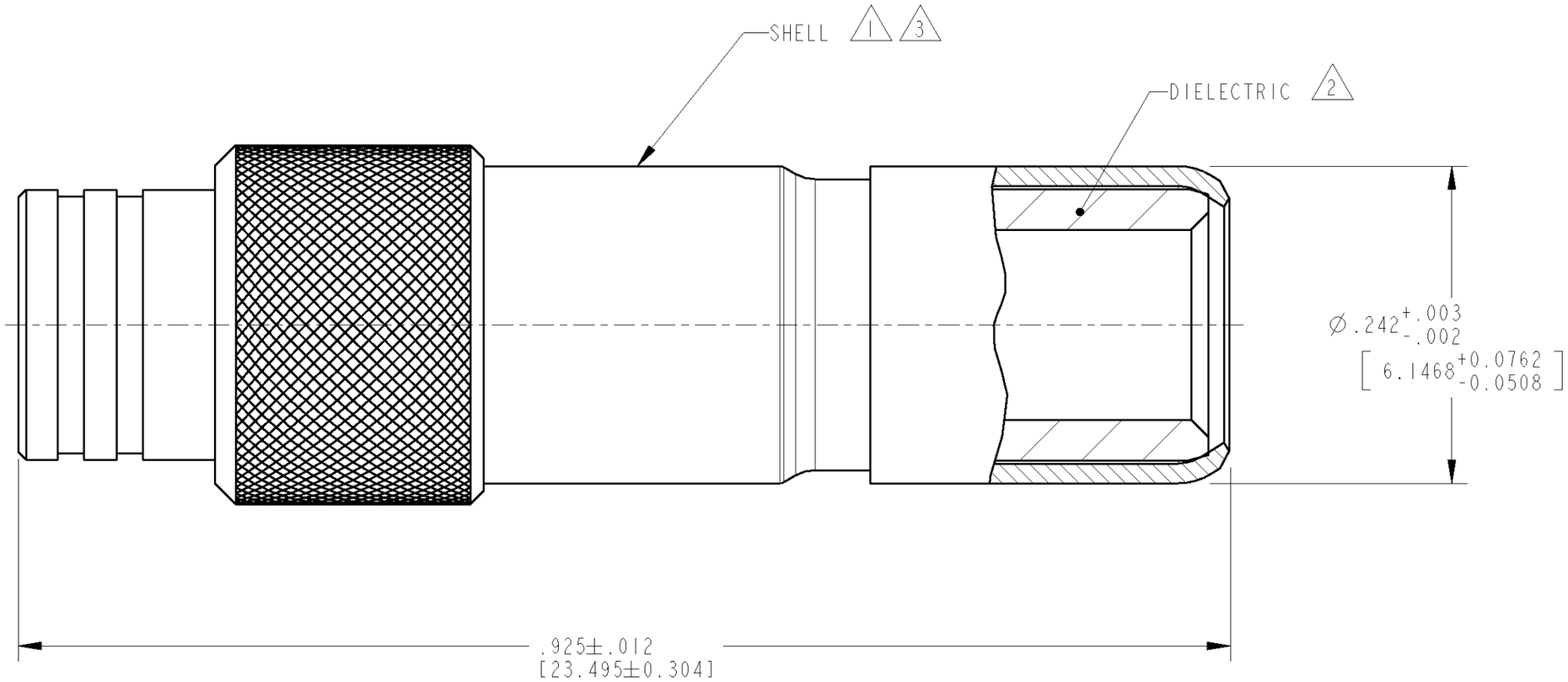

1 MATERIAL: BRASS PER QQ-B-626.

2 MATERIAL: POLYMETHYLPENTENE (TPX)

3 FINISH: BRIGHT TIN PLATE PER ASTM-B-545

1326947-1

PART NUMBER

THIS DRAWING IS A CONTROLLED DOCUMENT FOR TYCO ELECTRONICS CORPORATION IT IS SUBJECT TO CHANGE AND THE CONTROLLING ENGINEERING ORGANIZATION SHOULD BE CONTACTED FOR THE LATEST REVISION.

DIMENSIONS: INCHES [mm]

TOLERANCES UNLESS OTHERWISE SPECIFIED:
0 PLC ±-
1 PLC ±-
2 PLC ±-
3 PLC ±-
4 PLC ±-
ANGLES ±-

MATERIAL 1 2

FINISH 3

DWN R. WOOTEN 21DEC2004
CHK L. VARSIK 21DEC2004
APVD L. VARSIK 21DEC2004
PRODUCT SPEC -
APPLICATION SPEC -
WEIGHT -

CUSTOMER DRAWING

tyco Electronics
Tyco Electronics
Harrisburg, PA 17105-3608

NAME SUB ASSEMBLY, JACK SNAP-LOCK
-

SIZE	CAGE CODE	DRAWING NO	RESTRICTED TO
A3	00779	C-1326947	-

SCALE 0:1 SHEET 1 OF 1 REV 0

AMP 1470-19 REV 31MAR2000

Pro/ENGINEER DRAWING