PART NUMBER	ENGINEERING NUMBER	MOUNT OPTION	PLATING	MAT'L.	PACKAGING
39-31-1032	5569-03A4-BL	4	BLANK	BL	BULK
39-30-3035	5569-03A4	4	BLANK	BLANK	
39-30-4033	5569-03A4GS2	4	15 GOLD	BLANK	
39-30-3037	5569-03A4G	4	30 GOLD	BLANK	
39-30-3032	5569-03A3-210	3	BLANK	210	TRAY
39-30-3034	5569-03A3G-210	3	30 GOLD		
39-30-3036	5569-03A4-210	4	BLANK		BULK
39-30-4030	5569-03A4G2-210	4	15 GOLD		
39-30-3038	5569-03A4G-210	4	30 GOLD	210	
NO E.D.P.	5569-03A5G	5	30 GOLD	BLANK	
NO E.D.P.	5569-03A5MS	5	TIN/NICKEL	BLANK	
NO E.D.P.	5569-03A5G-210	5	30 GOLD	210	
39-34-3037	5569-03A5MS-210	5	TIN/NICKEL	210	
46999-0700	5569-03A8MS-130	8	TIN/NICKEL	130	TRAY

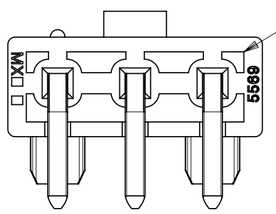

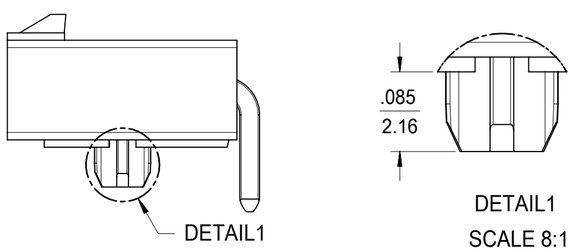

PRESS FIT OPTION

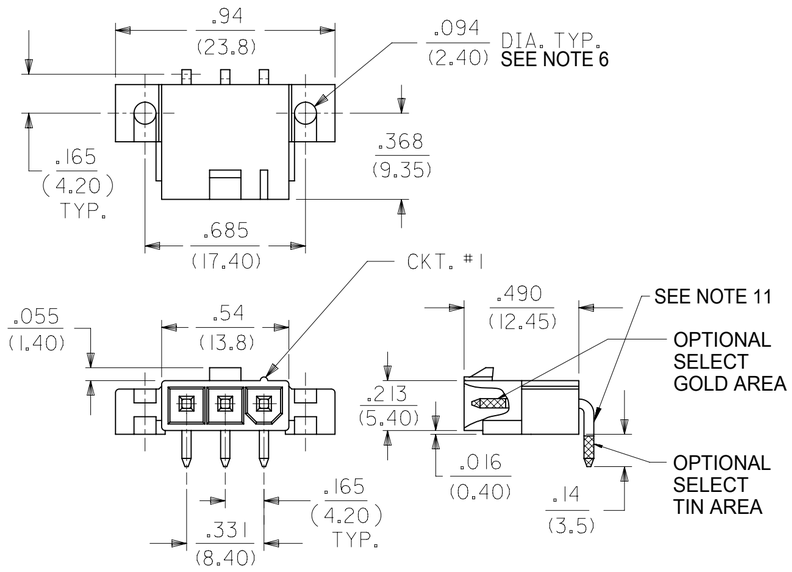

RIGHT ANGLE HEADER
(SCREW MOUNT)

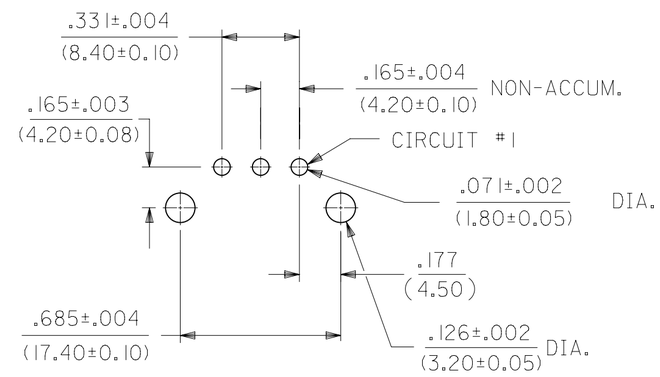

RECOMMENDED HOLE LAYOUT FOR
.070/(1.78) MAX. THICK P.C. BOARD
VIEWED FROM COMPONENT SIDE

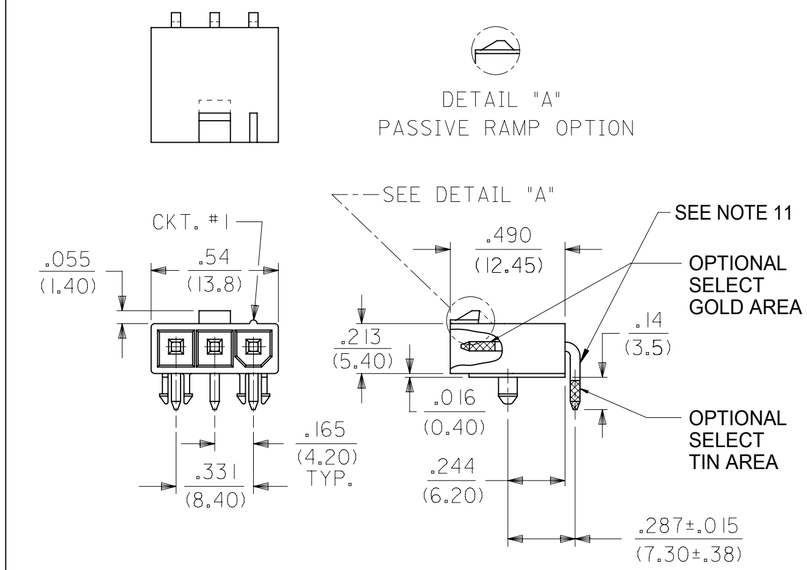

RIGHT ANGLE HEADER
(PEG MOUNT)

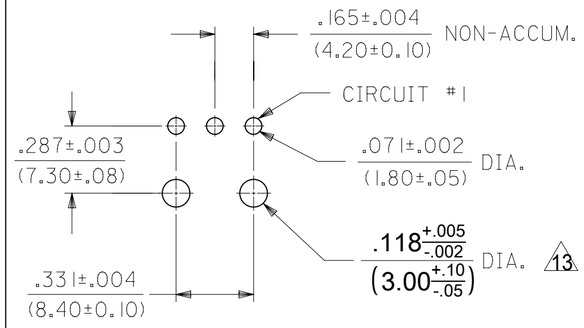

RECOMMENDED HOLE LAYOUT FOR
.070/(1.78) MAX. THICK P.C. BOARD
VIEWED FROM COMPONENT SIDE

NOTES:

1) HOUSING MATERIAL:
"BLANK" = NYLON 6/6, U.L. 94V-2, COLOR: NATURAL.
130 = LCP, U.L. 94V-0, COLOR: BLACK
IEC 60335-1, 5TH EDITION GLOW WIRE CAPABLE
210 = NYLON 6/6, U.L. 94V-0, COLOR: NATURAL.
BL = NYLON 6/6, U.L. 94V-2, COLOR: BLACK.
TERMINAL MATERIAL: BRASS, ALLOY

2) TERMINAL PLATING:
"BLANK," MS - .000100/(0.00254) MIN. MATTE TIN OVER .000050/(0.00127) MIN. NICKEL
G - .000030/(.00076) MIN. SELECT GOLD, .000100/(.00254) MIN. SELECT MATTE TIN OVER .000050/(.00127) MIN. NICKEL OVERALL.
G2,GS2 - .000015/(.00038) MIN. SELECT GOLD, .000100/(.0254) MIN. SELECT MATTE TIN OVER .000050/(.00127) MIN. NICKEL OVERALL.

3) PRODUCT SPECIFICATION: PS-5556-001

4) PACKAGING SPECIFICATION: BULK PACK PER PK-5569-002
TRAY PACK PER PK-5569-005

5) PART MATES WITH MOLEX RECEPTACLE #5557,46994 AND 200453.

6) PART IS DESIGNED FOR USE WITH #4 OR M3 SELF TAPPING SCREWS.

7) DISCOLORATION IN THE BANDOLIER CARRIER AREA OF THE PIN IS INHERENT TO THE PLATING PROCESS AND IS DUE TO THE MASKING EFFECT OF THE CARRIER. THIS DISCOLORATION IS IN A NON-FUNCTIONAL AREA OF THE PIN AND WILL NOT AFFECT THE PERFORMANCE OF THE HEADER ASSEMBLY.

8) CONNECTORS ARE NOT BE BE MATED OR UNMATED WHILE CIRCUITS ARE LIVE.

9) PARTS ARE NOT DESIGNED FOR CURRENT SHARING.

10) PART CONFORMS TO CLASS "B" REQUIREMENTS OF "COSMETIC SPECIFICATION PS-45499-002.'"

11) FORMING MARKS ON PINS ARE ACCEPTABLE

12 CORNER CORE-OUTS ARE OPTIONAL AND MAY OR MAY NOT BE PRESENT

13 HOLE TOLERANCE FOR PART NUMBER 46999-0700 IS ±.001 / ±0.03

LEGEND

5569-03A**-*

SERIES NO.
CIRCUIT SIZE
ASSEMBLY
MOUNTING & RAMP OPTION
"3" = SCREW MOUNT, POSITIVE RAMP
"4" = PEG MOUNT, POSITIVE RAMP
"5" = PEG MOUNT, PASSIVE RAMP
"8" = PRESS FIT PEG, POSITIVE RAMP
HOUSING MAT'L. OPTION (SEE NOTE 1)
PLATING OPTION (SEE NOTE 2)

THIS DRAWING REPLACES DRAWING SDA-5569-03A**

THIS DRAWING CONTAINS INFORMATION THAT IS PROPRIETARY TO MOLEX ELECTRONIC TECHNOLOGIES, LLC AND SHOULD NOT BE USED WITHOUT WRITTEN PERMISSION

DIMENSION UNITS	SCALE
IN/MM	NTS

GENERAL TOLERANCES (UNLESS SPECIFIED)

	MM	INCH
4 PLACES	±	±
3 PLACES	±	± 0.01
2 PLACES	± 0.25	± 0.015
1 PLACE	± 0.38	±
0 PLACES	±	±
ANGULAR TOL	± 3.0 °	

DRAFT WHERE APPLICABLE MUST REMAIN WITHIN DIMENSIONS

CURRENT REV DESC:

EC NO: 806008
DRWN: JERRYW8 2024/11/27
CHK'D: XQZHANG 2024/12/09
APPR: XQZHANG 2024/12/09

INITIAL REVISION:
DRWN: GEP 1990/09/20
APPR: FSMITH 2014/05/16

THIRD ANGLE PROJECTION | DRAWING: C-SIZE | SERIES: 5569

molex

RIGHT ANGLE HEADER ASSY,
3 CKT., SINGLE ROW, MINI-FIT JR. SERIES

PRODUCT CUSTOMER DRAWING

DOCUMENT NUMBER	DOC TYPE	DOC PART	REVISION
55690304-SD	PSD	000	A2

MATERIAL NUMBER	CUSTOMER	SHEET NUMBER
SEE CHART	GENERAL MARKET	1 OF 1

DOCUMENT STATUS	P1	RELEASE DATE	2024/12/09 01:53:10

FORMAT: Eng-legs-master-B-prod-C
REVISION: E1
DATE: 2021/05/01