CUSTOMER DRAWING		
CATALOG # 15SRB1-R		
ECN #	APPRVD.	DATE
	PJO	02MAY07

SAFETY ORGANIZATIONS

THIS FILTER HAS BEEN FORMALLY RECOGNIZED, CERTIFIED OR APPROVED BY THE LISTED AGENCY. THEREFORE, ALL TEST/REQUIREMENTS SPECIFIED IN THE LATEST REVISION OF THE FOLLOWING AGENCY STANDARDS HAVE BEEN MET:

UL RECOGNIZED: UL 1283
CSA CERTIFIED: CSA 22.2, # 0,0.4,8
VDE APPROVED: EN 133 200

OPERATING SPECIFICATIONS

LINE CURRENT/VOLTAGE: 15 AMP, 120/250 VAC,
10 AMP/40°C, 250 VAC

LINE FREQUENCY: 50-60Hz

MAXIMUM LEAKAGE CURRENT,
EACH LINE TO GROUND: 9.6µA @ 120V 60Hz
16.6µA @ 250V 50Hz

OPERATING AMBIENT TEMP. RANGE: -10°C TO +40°C @ RATED CURRENT, I_r.

IN AN AMBIENT, T_a, HIGHER THAN 40°C, THE MAXIMUM OPERATING CURRENT, I_o, IS AS FOLLOWS:

$$I_o = I_r \sqrt{\frac{100 - T_a}{60}}$$

RELIABILITY SPECIFICATIONS:

STORAGE TEMPERATURE: -40°C TO +85°C
HUMIDITY: 21 DAYS @ 40°C 95% RH.
CURRENT OVERLOAD TEST: 6 TIMES I_r FOR 8 SECONDS

TEST SPECIFICATIONS:

INDUCTANCE: N/A mH
CAPACITANCE: (MEASURED @ 1KHz, 0.250VAC MAX., 25°C±1°C)
LINE TO GROUND: 100pF ± 20%
LINE TO LINE: N/A
DISCHARGE RESISTOR: N/A
L/G AND L/L I.R.
NO DISCHARGE RESISTOR: 6000MΩ (MIN.) @ 100VDC, 20°C AND 50% RH

RECOMMENDED RECEIVING INSPECTION HIPOT:

LINE TO GROUND: 1500 VAC FOR 1 MINUTE
LINE TO LINE: 1450 VDC FOR 1 MINUTE

FILTER APPROVAL:

THE BEST WAY TO SELECT AND QUALIFY A FILTER IS FOR YOUR ENGINEERING TO TEST THE UNIT IN YOUR EQUIPMENT.

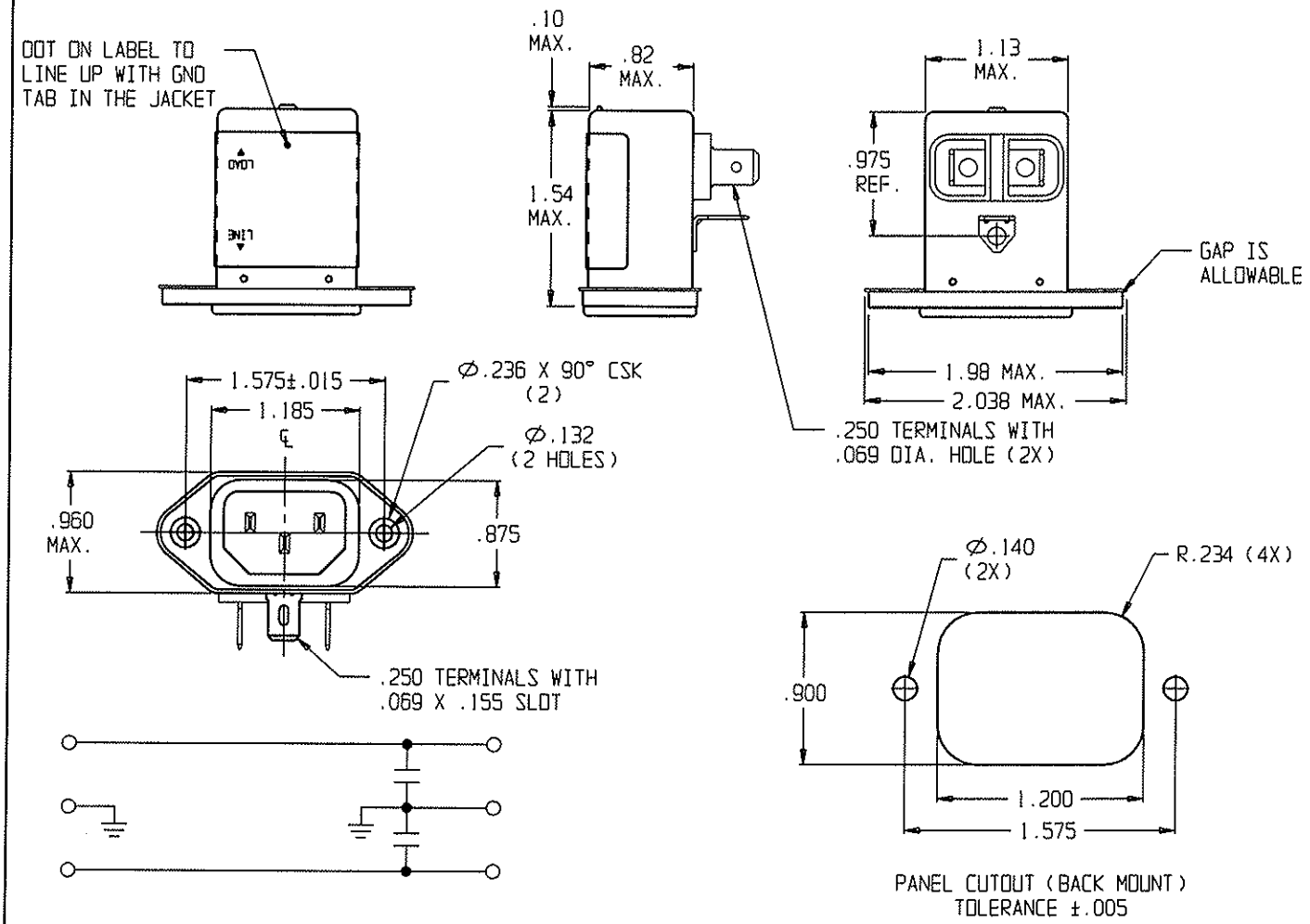

50Ω- 50Ω(MINIMUM) INSERTION LOSS

FREQUENCY MHz	1.0	5.0	10	50	100	300
COMMON dB	/	/	/	3	6	22
DIFF. dB	/	/	/	/	/	/

THIRD ANGLE PROJECTION

UNLESS OTHERWISE SPECIFIED, TOLERANCE TO BE ±.025
MATERIAL & FINISH: AS SUPPLIED

This document is proprietary to CORCOM INC. and is not to be reproduced nor used for manufacturing purposes except on CORCOM'S prior written consent.

tyco Electronics corcom
620 S. BUTTERFIELD RD. MUNDELEIN IL 60060

POWER LINE FILTER

CAD FILE: G:\CD\15SRB2-R00		TYCO # 4-6609987-7	
SCALE: .75:1	DATE: 18JAN06	CATALOG NO. 15SRB2-R	REV. 0
DRW. BY: SO	ORIG: PJO		