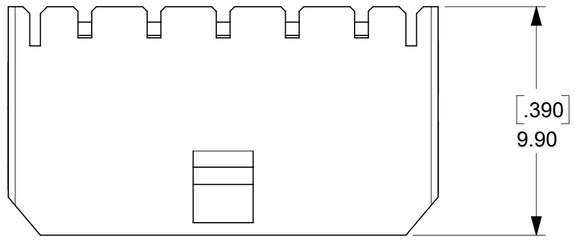

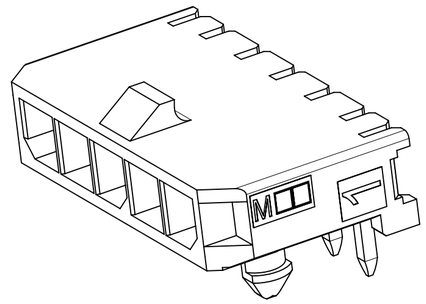

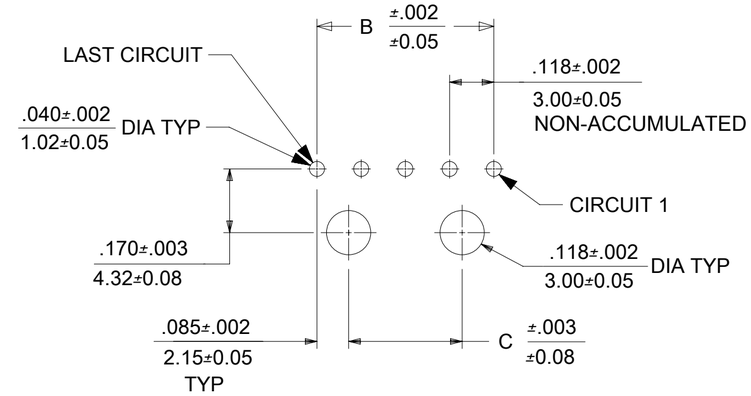

CKTS	A	B	C
2	.380 / 9.65	.118 / 3.00	N/A
3	.498 / 12.65	.236 / 6.00	N/A
4	.616 / 15.65	.354 / 9.00	.185 / 4.70
5	.734 / 18.64	.472 / 12.00	.303 / 7.70
6	.852 / 21.64	.591 / 15.00	.421 / 10.70
7	.970 / 24.64	.709 / 18.00	.539 /13.70
8	1.088 / 27.64	.827 / 21.00	.657 / 16.70
9	12.06 / 30.63	.945 / 24.00	.776 / 19.70
10	1.325 / 33.66	1.063 / 27.00	.894 / 22.70
11	1.443 / 36.65	1.181 / 30.00	1.012 / 25.70
12	1.561 / 39.65	1.299 / 33.00	1.130 / 28.70

PCB LAYOUT: COMPONENT SIDE
RECOMMENDED PCB THICKNESS: .062/1.57
4-12 CIRCUIT HEADERS

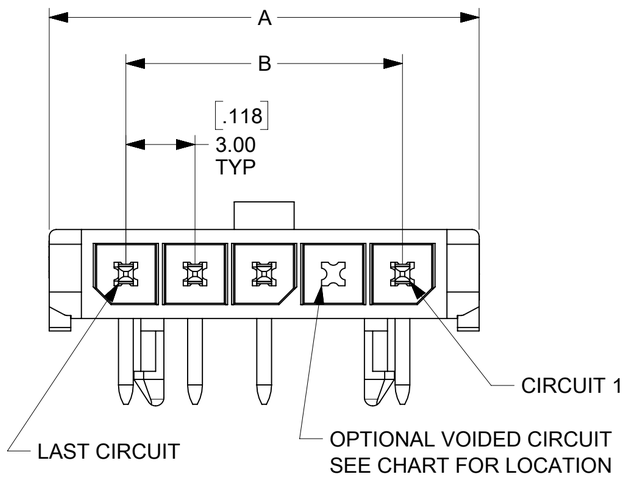

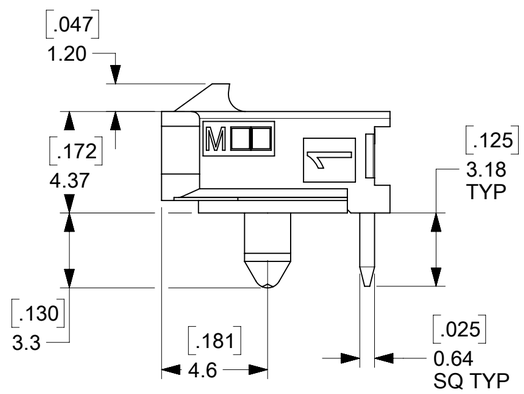

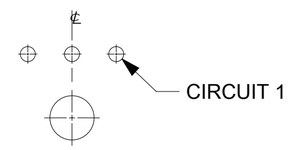

PCB LAYOUT: 3 CKT

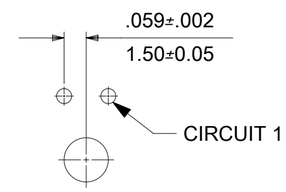

PCB LAYOUT: 2 CKT

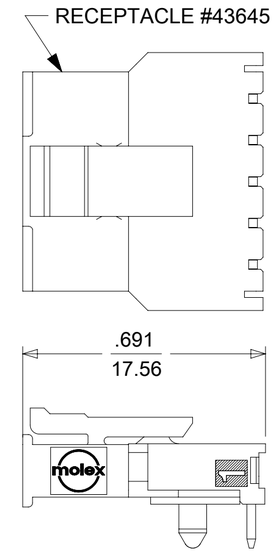

MATED MICRO FIT CONNECTOR

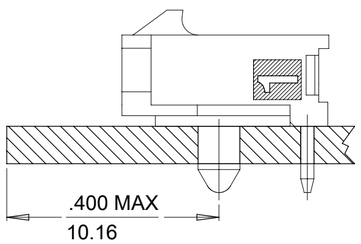

LOCATION DETAIL (SEE NOTE 6)

CKTS	FINISH A MATERIAL NUMBER	VOID CKT #	FINISH B MATERIAL NUMBER	VOID CKT #	FINISH C MATERIAL NUMBER	VOID CKT #	FINISH D MATERIAL NUMBER
02	43650-0200	N/A	43650-0201	N/A	43650-0202	N/A	43650-0237
03	43650-0300	N/A	43650-0301	N/A	43650-0302	N/A	
04	43650-0400	N/A	43650-0401	N/A	43650-0402	N/A	
05	43650-0500	N/A	43650-0501	N/A	43650-0502	N/A	
06	43650-0600	N/A	43650-0601	N/A	43650-0602	N/A	
07	43650-0700	N/A	43650-0701	N/A	43650-0702	N/A	
08	43650-0800	N/A	43650-0801	N/A	43650-0802	N/A	
09	43650-0900	N/A	43650-0901	N/A	43650-0902	N/A	
10	43650-1000	N/A	43650-1001	N/A	43650-1002	N/A	
11	43650-1100	N/A	43650-1101	N/A	43650-1102	N/A	
12	43650-1200	N/A	43650-1201	N/A	43650-1202	N/A	
03	43650-1300	2					
05					43650-1502	2,3,4	
09	43650-1900	2,4,5	43650-1901	2,4,6,8			
10					43650-2002	2,3,5,6,8,9	
10					43650-3002	2,4,6,8,9	

NOTES:

1. HOUSING MATERIAL: LIQUID CRYSTAL POLYMER, GLASS FILLED. UL94V-0,
   COLOR - BLACK
   TERMINAL MATERIAL: BRASS ALLOY
2. FINISH:
   A = .000060/(0.00152) MIN. REFLOWED MATTE TIN OVER
   .000050/(0.00127) MIN. NICKEL
   (FINISH IS BRIGHT IN APPEARANCE, THICKNESS AS APPLIED PRIOR TO REFLOW)

   B = .000015/(0.00038) MIN. SELECT GOLD IN CONTACT AREA
   .000100/(0.00254) MIN. SELECT MATTE TIN ON SOLDER TAILS BOTH OVER
   .000050/(0.00127) NICKEL OVERALL

   C = .000030/(0.00076) MIN. SELECT GOLD IN CONTACT AREA
   .000100/(0.00254) MIN. SELECT MATTE TIN ON SOLDER TAILS BOTH OVER
   .000050/(0.00127) NICKEL OVERALL

   D = .000100/(0.00254) MIN. MATTE TIN OVER
   .000050/(0.00127) MIN. NICKEL

3. PRODUCT SPECIFICATION: PS-43650
4. TRAY PACKAGED : SEE MOLEX DRAWING PK-70873-0321
5. MATES WITH MICRO FIT (3.0) RECEPTACLE SERIES 43645
6. TO AVOID INTERFERENCE BETWEEN RECEPTACLE AND PCB, HEADER MUST BE PLACED WITHIN .400/(10.16) MAX. FROM EDGE OF PCB, AS SHOWN IN LOCATION DETAIL.
7. PARTS CONFORM TO CLASS 'B' REQUIREMENTS OF COSMETIC SPECIFICATION PS-45499-002
8. TEXT ON PART IS FOR REFERENCE ONLY. TEXT AND TEXT LOCATION MAY VARY DEPENDING ON PART NUMBER AND/OR TOOL.

DOCUMENT STATUS	P1	RELEASE DATE	2024/11/05 02:42:29

THIS DRAWING CONTAINS INFORMATION THAT IS PROPRIETARY TO MOLEX ELECTRONIC TECHNOLOGIES, LLC AND SHOULD NOT BE USED WITHOUT WRITTEN PERMISSION

DIMENSION UNITS	SCALE
mm	NTS

GENERAL TOLERANCES (UNLESS SPECIFIED)

	MM	INCH
4 PLACES	±	±
3 PLACES	±	± 0.01
2 PLACES	± 0.25	± 0.014
1 PLACE	± 0.35	±
0 PLACES	±	±
ANGULAR TOL	± 0.5 °	

DRAFT WHERE APPLICABLE MUST REMAIN WITHIN DIMENSIONS

CURRENT REV DESC:

EC NO: 801794
DRWN: ZIXUAQ 2024/02/19
CHK'D: XQZHANG 2024/11/05
APPR: XQZHANG 2024/11/05

INITIAL REVISION:
DRWN: KSAMIEC 2000/07/07
APPR: FSMITH 2016/03/18

THIRD ANGLE PROJECTION | DRAWING: C-SIZE | SERIES: 43650

molex

MICROFIT(3.0) RIGHT ANGLE THRU HOLE PEGS
SINGLE ROW - TRAY

PRODUCT CUSTOMER DRAWING

DOCUMENT NUMBER	DOC TYPE	DOC PART	REVISION
SD-43650-001	PSD	000	D8

MATERIAL NUMBER	CUSTOMER	SHEET NUMBER
SEE CHART	GENERAL MARKET	1 OF 1