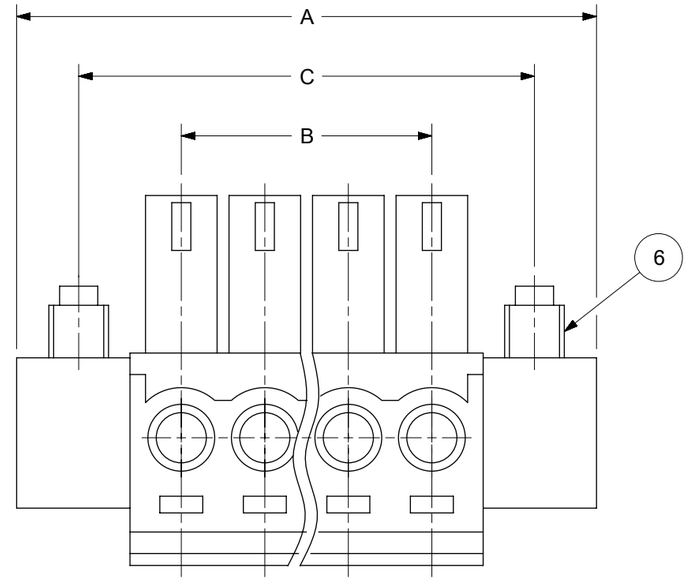

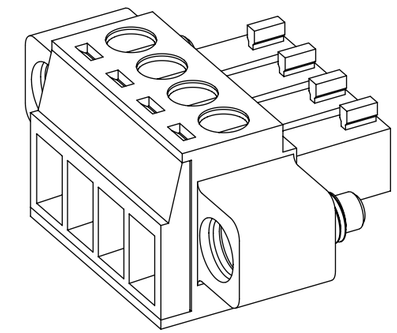

4 CIRCUIT SHOWN

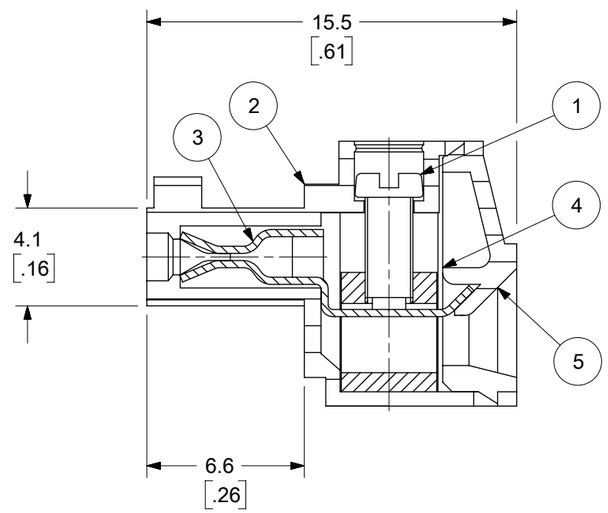

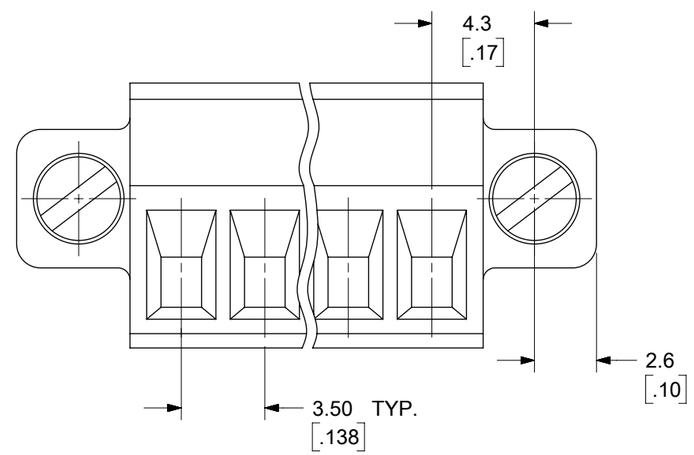

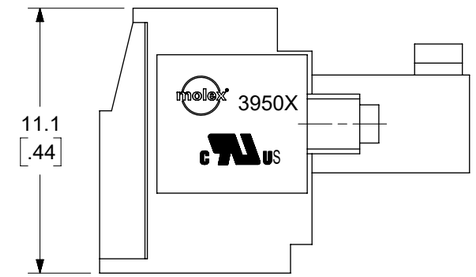

SPECIFICATIONS: (D)

1. MATERIAL:
   (1). SCREW: ZINC PLATED STEEL
   (2). BODY: PA 66 (UL94-V0)
   (3). TERMINAL: TIN PLATED PHOSPHOR BRONZE
   (4). CAGE: NICKEL PLATED BRASS
   (5). COVER: PA 66 (UL94-V0)
   (6). SCREW: ZINC PLATED STEEL
2. PRODUCT SPECIFICATION: PS-39500-001
3. WIRE RANGE: 30 - 16 AWG
4. TORQUE: 2 IN-LBS.
5. WIRE STRIP LENGTH: 6.50/.256
6. NUMBER OF CIRCUIT POSITIONS AVAILABLE = 2 THROUGH 20

TOLERANCES			
MM	TOL	INCH	TOL
0-6	±0.25	0-.24	±.010
>6-30	±0.40	>.24-1.18	±.016
>30-120	±0.50	>1.18-4.76	±.020
>120	±0.80	>4.76	±.031

THIS DRAWING CONTAINS INFORMATION THAT IS PROPRIETARY TO MOLEX ELECTRONIC TECHNOLOGIES, LLC AND SHOULD NOT BE USED WITHOUT WRITTEN PERMISSION

FUNCTIONAL SYMBOLS: E/A = 0; E/C = 0; E/P = 0

DIVISIONAL SYMBOLS

DIMENSION UNITS: MM/INCH — SCALE: 4:1

GENERAL TOLERANCES (UNLESS SPECIFIED)

	MM	INCH
4 PLACES	± ---	± ---
3 PLACES	± ---	± SEE CHART
2 PLACES	± SEE CHART	± SEE CHART
1 PLACE	± SEE CHART	± ---
0 PLACES	± ---	± ---
ANGULAR TOL	± ---	

DRAFT WHERE APPLICABLE MUST REMAIN WITHIN DIMENSIONS

CURRENT REV DESC: UPDATED MATERIAL/PLATING NOTES FOR ITEMS 1-6. UPDATED MOLEX LATEST TITLE BLOCK

EC NO: 833839
DRWN: MARUTD 2025/09/01
CHK'D: DACHAMMER 2025/09/10
APPR: HKNEELAND 2025/09/15

INITIAL REVISION:
DRWN: LROTHAUS 2006/01/09
APPR: JPAWLICK 2006/01/10

THIRD ANGLE PROJECTION | DRAWING: B-SIZE | SERIES: 39504

molex

3.50MM, EURO TERM BLOCK
RIGHT ANGLE, PLUG, MOUNTING ENDS

PRODUCT CUSTOMER DRAWING

DOCUMENT NUMBER	DOC TYPE	DOC PART	REVISION
SD-39504-001	PSD	001	D

MATERIAL NUMBER	CUSTOMER	SHEET NUMBER
SEE SHEET-2	GENERAL MARKET	1 OF 2

DOCUMENT STATUS	P1	RELEASE DATE	2025/09/15 21:55:10

FORMAT: Eng-lega-master-tb-prod-B
REVISION: E1
DATE: 2021/05/01

CIRCUIT SIZE	MATERIAL NUMBERS												DIMENSIONAL INFORMATION					
	BLACK						GREEN											
	100% TIN			30 u" GOLD			100% TIN			30 u" GOLD								
	PRINTING OPTIONS			PRINTING OPTIONS			PRINTING OPTIONS			PRINTING OPTIONS			DIM. "A"		DIM. "B"		DIM. "C"	
	None	10A	11A	None	10A	11A	None	10A	11A	None	10A	11A	mm	inch	mm	inch	mm	inch
2	395040002	395040102	395040202	395040502	395040602	395040702	395045002	395045102	395045202	395045502	395045602	395045702	17.30	.681	3.50	.138	12.10	.476
3	395040003	395040103	395040203	395040503	395040603	395040703	395045003	395045103	395045203	395045503	395045603	395045703	20.80	.819	7.00	.276	15.60	.614
4	395040004	395040104	395040204	395040504	395040604	395040704	395045004	395045104	395045204	395045504	395045604	395045704	24.30	.957	10.50	.413	19.10	.752
5	395040005	395040105	395040205	395040505	395040605	395040705	395045005	395045105	395045205	395045505	395045605	395045705	27.80	1.094	14.00	.551	22.60	.890
6	395040006	395040106	395040206	395040506	395040606	395040706	395045006	395045106	395045206	395045506	395045606	395045706	31.30	1.232	17.50	.689	26.10	1.028
7	395040007	395040107	395040207	395040507	395040607	395040707	395045007	395045107	395045207	395045507	395045607	395045707	34.80	1.370	21.00	.827	29.60	1.165
8	395040008	395040108	395040208	395040508	395040608	395040708	395045008	395045108	395045208	395045508	395045608	395045708	38.30	1.508	24.50	.965	33.10	1.303
9	395040009	395040109	395040209	395040509	395040609	395040709	395045009	395045109	395045209	395045509	395045609	395045709	41.80	1.646	28.00	1.102	36.60	1.441
10	395040010	395040110	395040210	395040510	395040610	395040710	395045010	395045110	395045210	395045510	395045610	395045710	45.30	1.783	31.50	1.240	40.10	1.579
11	395040011	395040111	395040211	395040511	395040611	395040711	395045011	395045111	395045211	395045511	395045611	395045711	48.80	1.921	35.00	1.378	43.60	1.717
12	395040012	395040112	395040212	395040512	395040612	395040712	395045012	395045112	395045212	395045512	395045612	395045712	52.30	2.059	38.50	1.516	47.10	1.854
13	395040013	395040113	395040213	395040513	395040613	395040713	395045013	395045113	395045213	395045513	395045613	395045713	55.80	2.197	42.00	1.654	50.60	1.992
14	395040014	395040114	395040214	395040514	395040614	395040714	395045014	395045114	395045214	395045514	395045614	395045714	59.30	2.335	45.50	1.791	54.10	2.130
15	395040015	395040115	395040215	395040515	395040615	395040715	395045015	395045115	395045215	395045515	395045615	395045715	62.80	2.472	49.00	1.929	57.60	2.268
16	395040016	395040116	395040216	395040516	395040616	395040716	395045016	395045116	395045216	395045516	395045616	395045716	66.30	2.610	52.50	2.067	61.10	2.406
17	395040017	395040117	395040217	395040517	395040617	395040717	395045017	395045117	395045217	395045517	395045617	395045717	69.80	2.748	56.00	2.205	64.60	2.543
18	395040018	395040118	395040218	395040518	395040618	395040718	395045018	395045118	395045218	395045518	395045618	395045718	73.30	2.886	59.50	2.343	68.10	2.681
19	395040019	395040119	395040219	395040519	395040619	395040719	395045019	395045119	395045219	395045519	395045619	395045719	76.80	3.024	63.00	2.480	71.60	2.819
20	395040020	395040120	395040220	395040520	395040620	395040720	395045020	395045120	395045220	395045520	395045620	395045720	80.30	3.161	66.50	2.618	75.10	2.957

TOLERANCES			
MM	TOL	INCH	TOL
0-6	±0.25	0-.24	±.010
>6-30	±0.40	>.24-1.18	±.016
>30-120	±0.50	>1.18-4.76	±.020
>120	±0.80	>4.76	±.031

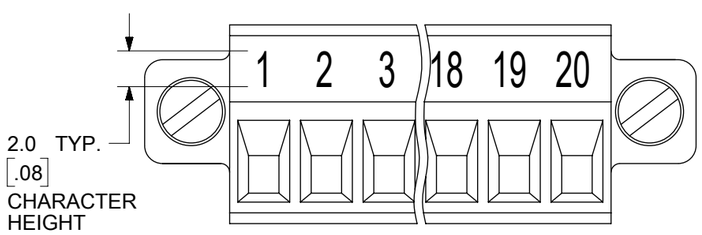

10A IMPRINTING

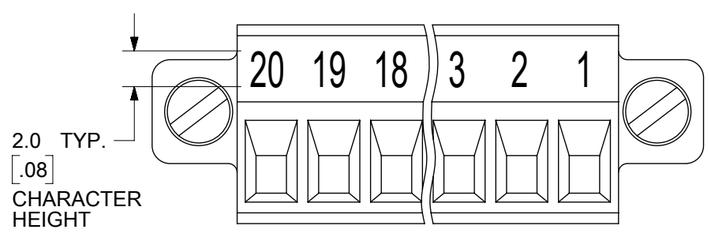

11A IMPRINTING

FUNCTIONAL SYMBOLS
E A = 0
E C = 0
E P = 0
DIVISIONAL SYMBOLS

THIS DRAWING CONTAINS INFORMATION THAT IS PROPRIETARY TO MOLEX ELECTRONIC TECHNOLOGIES, LLC AND SHOULD NOT BE USED WITHOUT WRITTEN PERMISSION

DIMENSION UNITS: MM/INCH
SCALE: 3:1

GENERAL TOLERANCES (UNLESS SPECIFIED)

	MM	INCH
4 PLACES	± ---	± ---
3 PLACES	± ---	± SEE CHART
2 PLACES	± SEE CHART	± SEE CHART
1 PLACE	± SEE CHART	± ---
0 PLACES	± ---	± ---
ANGULAR TOL	± ---	

DRAFT WHERE APPLICABLE MUST REMAIN WITHIN DIMENSIONS

CURRENT REV DESC: UPDATED MATERIAL/PLATING NOTES FOR ITEMS 1-6. UPDATED MOLEX LATEST TITLE BLOCK

EC NO: 833839
DRWN: MARUTD 2025/09/01
CHK'D: DACHAMMER 2025/09/10
APPR: HKNEELAND 2025/09/15

INITIAL REVISION:
DRWN: LROTHAUS 2006/01/09
APPR: JPAWLICK 2006/01/10

THIRD ANGLE PROJECTION
DRAWING: B-SIZE
SERIES: 39504

molex

3.50MM, EURO TERM BLOCK
RIGHT ANGLE, PLUG, MOUNTING ENDS

PRODUCT CUSTOMER DRAWING

DOCUMENT NUMBER	DOC TYPE	DOC PART	REVISION
SD-39504-001	PSD	001	D

MATERIAL NUMBER	CUSTOMER	SHEET NUMBER
SEE CHART	GENERAL MARKET	2 OF 2

DOCUMENT STATUS	P1	RELEASE DATE	2025/09/15 21:55:10

FORMAT: Eng-lega-master-tb-prod-B
REVISION: E1
DATE: 2021/05/01