MATERIAL NO-56 OPTION .	ENGINEERING NUMBER	NUMBER OF CIRCUITS	DIM "A" .010/.13	DIM "B"
399200502	920502-56	2	1.150/29.21	.591/1591
399200503	920503-56	3	1.740/44.20	1.181/30.00
399200504	920504-56	4	2.330/59.18	1.772/45.01
399200505	920505-56	5	2.920/74.17	2.362/59.99
399200508	920508-56	8	4.690/119.13	4.134/105.00
399200510	920510-56	10	5.870/149.10	5.315/135.00
399200511	920511-56	11	6.470/164.43	5.906/150.01
399200512	920512-56	12	7.060/179.32	6.496/165.00

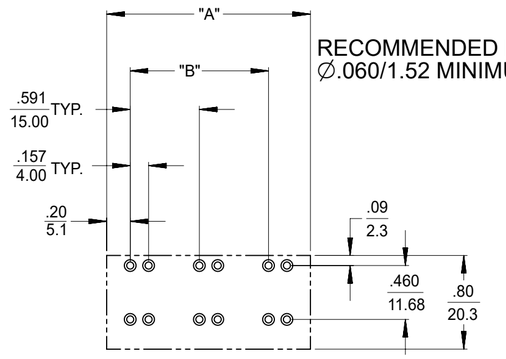

RECOMMENDED PTH PATTERN
∅.060/1.52 MINIMUM FINISHED HOLE

VIEW SCALE 1:1

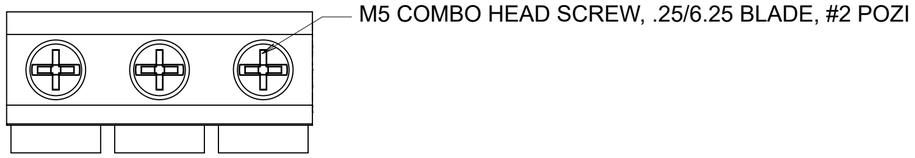

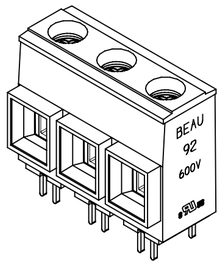

ACTUAL SIZE

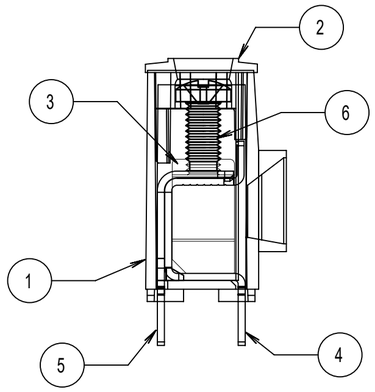

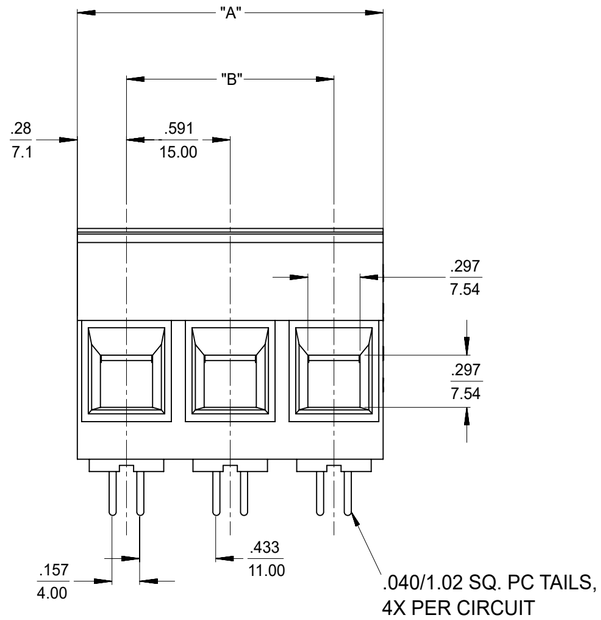

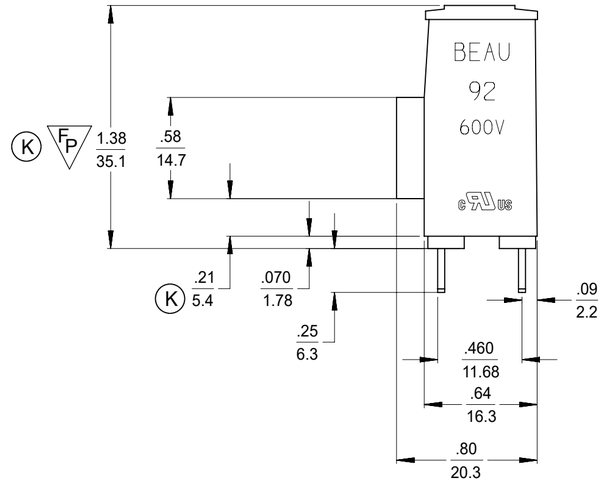

NOTES:
1. DESIGNED TO MEET NEC & UL 1059 CLASS C 600 VOLTS
2. "XX" REFERS TO THE NUMBER OF CIRCUIT POSITIONS.
3. ROHS COMPLIANT BY EXEMPTION. *

ITEM	QTY.	DESCRIPTION	MATERIAL	FINISH
6	XX	SCREW, M5, #2 POZI-SLOT, ST. STEEL	S.S.	TIN
5	XX	TERMINAL	COPPER	TIN
4	XX	TERMINAL	COPPER	TIN
3	XX	CAGE *	BRASS	NICKEL
2	1	COVER	THERMOPLASTIC	BLACK
1	1	BODY	THERMOPLASTIC	BLACK

DOCUMENT STATUS | P1 | RELEASE DATE | 2025/07/02 10:09:31

THIS DRAWING CONTAINS INFORMATION THAT IS PROPRIETARY TO MOLEX ELECTRONIC TECHNOLOGIES, LLC AND SHOULD NOT BE USED WITHOUT WRITTEN PERMISSION

DIMENSION UNITS: IN/MM | SCALE: 4:1

GENERAL TOLERANCES (UNLESS SPECIFIED)

	MM	INCH
4 PLACES	±	± 0.0002
3 PLACES	± 0.003	± 0.005
2 PLACES	± 0.13	± 0.01
1 PLACE	± 0.3	± 0.1
0 PLACES	±	±
ANGULAR TOL	± 0.5 °	

DRAFT WHERE APPLICABLE MUST REMAIN WITHIN DIMENSIONS

CURRENT REV DESC: REMOVED OBSOLETED PART NUMBERS AS PER PCN#515979

EC NO: 823502
DRWN: MADHAM5 2025/05/02
CHK'D: GGA 2025/07/02
APPR: GGA 2025/07/02

INITIAL REVISION:
DRWN: GHR 00/02/03
APPR: LROTHAUS 01/05/10

THIRD ANGLE PROJECTION | DRAWING: C-SIZE | SERIES: 39920

molex

SR, BTS, #3AWG
85A, 600V

PRODUCT CUSTOMER DRAWING

DOCUMENT NUMBER	DOC TYPE	DOC PART	REVISION
SD-39920-005	PSD	001	K1

MATERIAL NUMBER	CUSTOMER	SHEET NUMBER
SEE TABLE	GENERAL MARKET	1 OF 1

FORMAT: Eng-lega-master-lb-prod-C
REVISION: E1
DATE: 2021/05/01