THIS DRAWING IS UNPUBLISHED. RELEASED FOR PUBLICATION 20
© COPYRIGHT 20 BY TYCO ELECTRONICS CORPORATION ALL RIGHTS RESERVED.

LOC	DIST
GP	00

REVISIONS

P	LTR	DESCRIPTION	DATE	DWN	APVD
	F3	REVISED PER ECN-23-235434	17OCT2023	AB	SZ
	F4	REVISED PER ECN-24-246353	05JAN2024	AB	SZ
	F5	REVISED PER ECN-25-324949	27MAY2025	SSH	RCG
	F6	REVISED PER ECN-26-373827	18MAR2026	SH	SZ

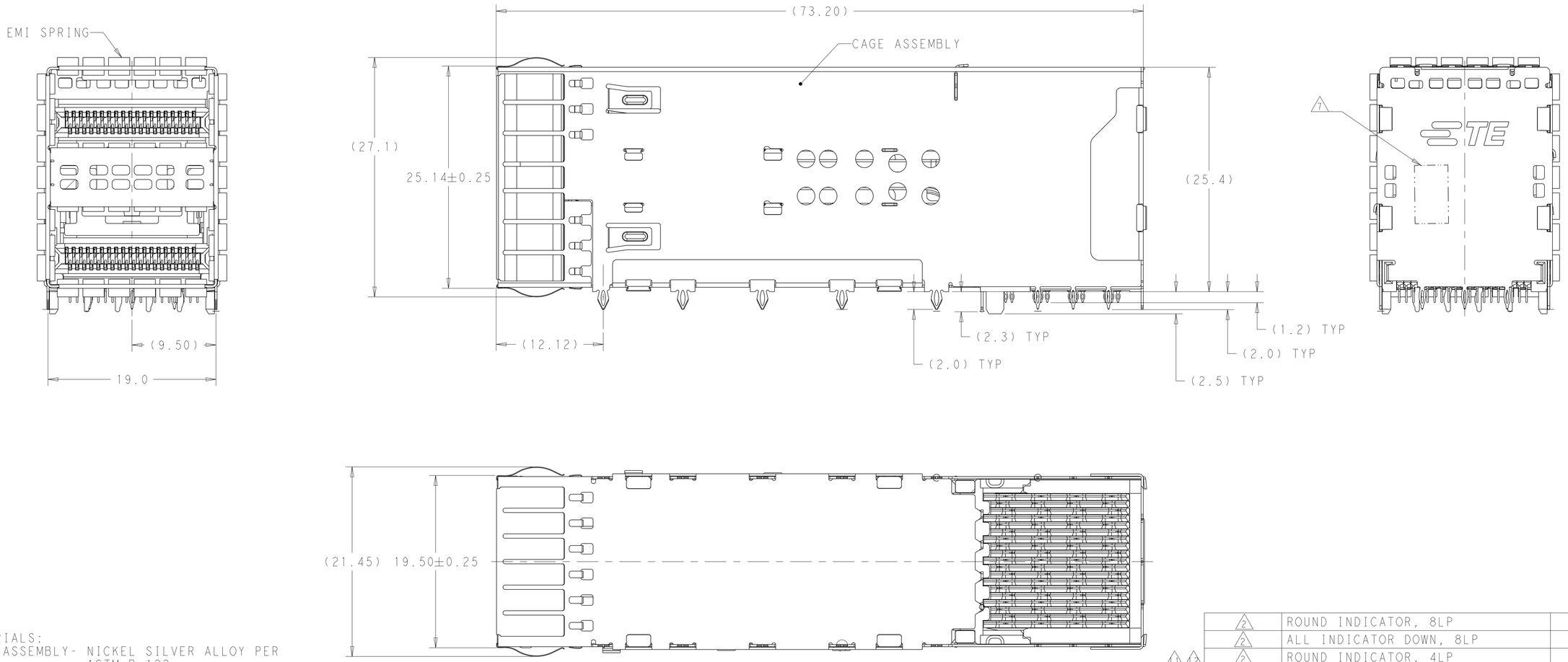

1. MATERIALS:
   CAGE ASSEMBLY- NICKEL SILVER ALLOY PER ASTM B 122.
   EMI SPRING- COPPER ALLOY, NICKEL PLATED.
   HOUSING- POLYESTER LCP WITH 94V-0.
   CHICKLET- POLYESTER LCP WITH 94V-0.
   CONTACT- COPPER ALLOY.
   LIGHTPIPE- POLYCARBONATE WITH 94V-0.

2. CONTACT FINISH: 0.76µm GOLD ON MATING END, 0.7-1.5µm MATT TIN ON COMPLIANT AREA, ALL OVER 1.27µm NICKEL.

3. DATUM AND BASIC DIMENSION ESTABLISHED BY CUSTOMER.

4. MINIMUM PCB THICKNESS OF 1.57.

5. THE ENTIRE AREA OF THE CONNECTOR FOOTPRINT, INDICATED BY THE DASHED LINE, TO BE CONSIDERED THE KEEPOUT AREA FOR COMPONENTS.

6. CROSS-HATCHED AREAS REPRESENT ZONES ON THE PCB THAT COME IN CONTACT WITH OR BE IN CLOSE PROXIMITY TO THE PLASTIC HOUSING OR THE CONNECTOR CAGE. INDICATED AREAS TO BE CONSIDERED TRACE FREE.

7. PART NUMBER AND DATE CODE MAKED IN APPROXIMATE AREA SHOWN.

8. CONTACT FINISH: 0.08µm MINIMUM GOLD OVER 0.68µm PALLADIUM-NICKEL ON MATING AREA, 0.7-1.5µm MATT TIN ON COMPLIANT AREA, ALL OVER 1.27µm NICKEL.

9. HATCHED AREA IS PLACEMENT ZONE FOR LED. LED SHOULD BE CENTERED WITHIN ZONE. RECOMMEND 0805 PACKAGE.

10. THE ORDER FOR LED LOACTION,CORRESPONDING TO THE LIGHT PIPES

11. LOW Br/Cl AS DEFINED IN TEC-138-702.

12. CAGE ASSEMBLY WITH 1.27um NICKEL PLATED.

	CONTACT FINISH	DESCRIPTION	PART NUMBER
	2	ROUND INDICATOR, 8LP	2-2227669-7
	2	ALL INDICATOR DOWN, 8LP	2-2227669-6
11 12	2	ROUND INDICATOR, 4LP	4-2227669-1
	2	ROUND INDICATOR, 8LP	2-2227669-5
	2	4 UPPER LP	2-2227669-4
11 12	2	ROUND INDICATOR, 8LP	2-2227669-3
	2	ALL INDICATOR DOWN, 8LP	2-2227669-2
	2	ROUND INDICATOR, 8LP	2-2227669-1
	2	LEFT INDICATOR UP	2-2227669-0
11 12	2	LEFT INDICATOR DOWN, 4LP	1-2227669-9
11 12	2	ALL INDICATOR UP, 4LP	1-2227669-7
	2	ROUND INDICATOR, 4LP	1-2227669-1
	2	ALL INDICATOR DOWN, 4LP	1-2227669-0
	2	LEFT INDICATOR DOWN, 4LP	2227669-9
	2	LEFT INDICATOR UP, 4LP	2227669-8
	2	ALL INDICATOR UP, 4LP	2227669-7
	8	LEFT INDICATOR DOWN	2227669-6
	8	LEFT INDICATOR UP	2227669-5
	8	NO LIGHT PIPE	2227669-4
	2	LEFT INDICATOR DOWN	2227669-3
	2	LEFT INDICATOR UP	2227669-2
	2	NO LIGHTPIPE	2227669-1

THIS DRAWING IS A CONTROLLED DOCUMENT.

DIMENSIONS: mm

TOLERANCES UNLESS OTHERWISE SPECIFIED:
0 PLC ±-
1 PLC ±0.25
2 PLC ±0.15
3 PLC ±-
4 PLC ±-
ANGLES ±-

MATERIAL - SEE NOTE 1
FINISH - -

DWN M.SHIRK 16JAN2013
CHK D.SZCZESNY 16JAN2013
APVD -
PRODUCT SPEC 108-60102
APPLICATION SPEC 114-60015
WEIGHT -

TE Connectivity

NAME CAGE AND CONNECTOR ASSEMBLY, WITH EMI SPRING FINGERS, THRU BEZEL, 2X1, ZQSFP+ STACKED

SIZE A1 | CAGE CODE 00779 | DRAWING NO C-2227669 | RESTRICTED TO -

CUSTOMER DRAWING | SCALE 1:1 | SHEET 1 OF 8 | REV F6

4805 (3/11)

THIS DRAWING IS UNPUBLISHED. RELEASED FOR PUBLICATION 20
© COPYRIGHT 20 BY TYCO ELECTRONICS CORPORATION ALL RIGHTS RESERVED.

LOC	DIST
GP	00

REVISIONS

P	LTR	DESCRIPTION	DATE	DWN	APVD
	-	SEE SHEET 1	-	-	-

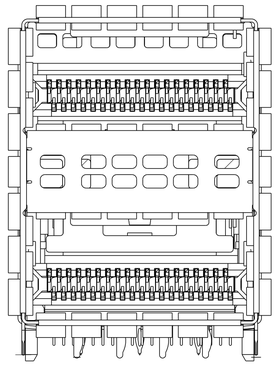

2227669-1
2227669-4
NO LIGHTPIPE IN ASSEMBLY

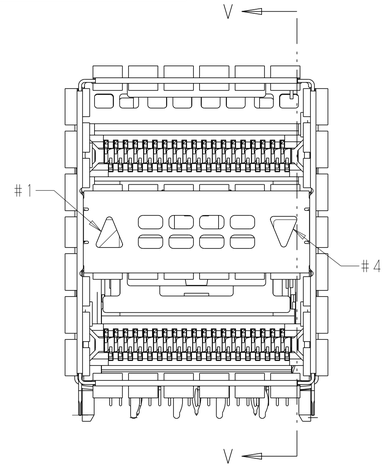

2227669-2
2227669-5
LEFT INDICATOR UP

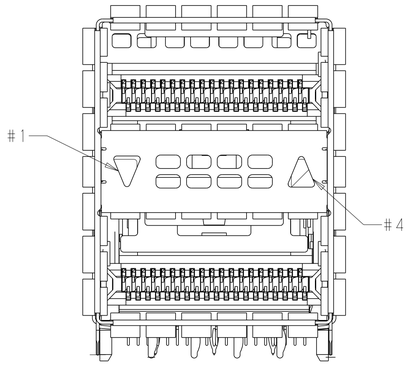

2227669-3
2227669-6
LEFT INDICATOR DOWN

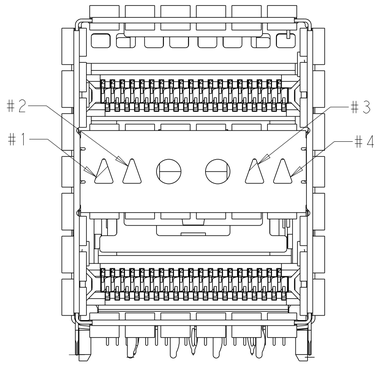

2227669-7
1-2227669-7
ALL INDICATOR UP, 4LP

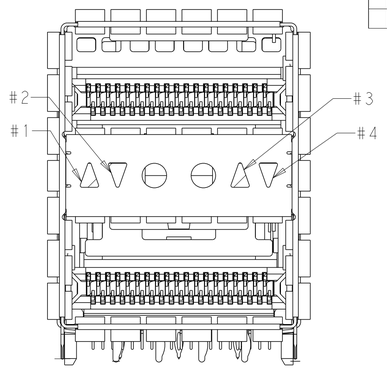

2227669-8
LEFT INDICATOR UP, 4LP

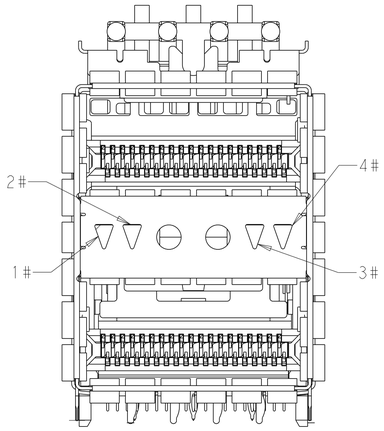

2-2227669-2
2-2227669-6
ALL INDICATOR DOWN, 8LP

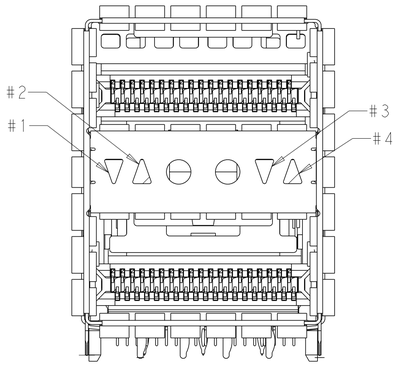

2227669-9
1-2227669-9
LEFT INDICATOR DOWN, 4LP

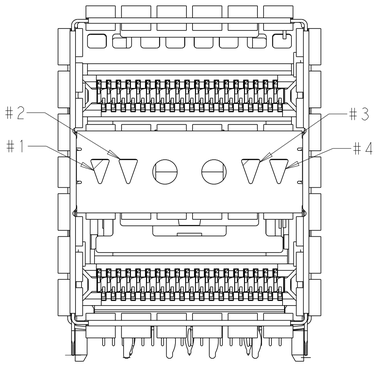

1-2227669-0
ALL INDICATOR DOWN, 4LP

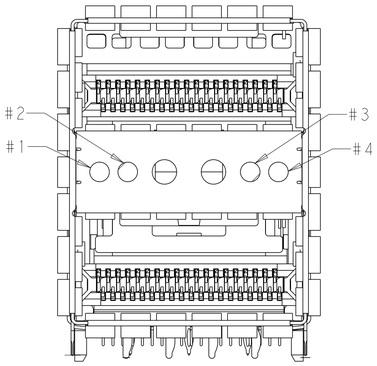

1-2227669-1
4-2227669-1
ROUND SHAPE INDICATORS, 4LP

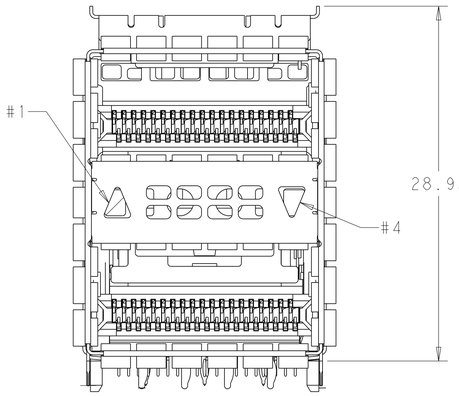

2-2227669-0
LEFT INDICATOR UP
SCALE 4:1

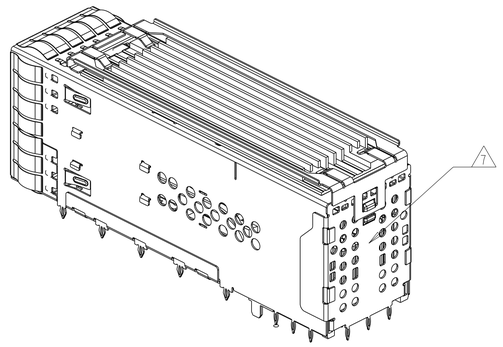

2-2227669-0
SCALE 2:1

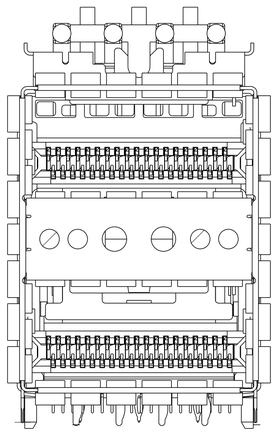

2-2227669-1
ALL ROUND INDICATORS, 8LP
SCALE 4:1

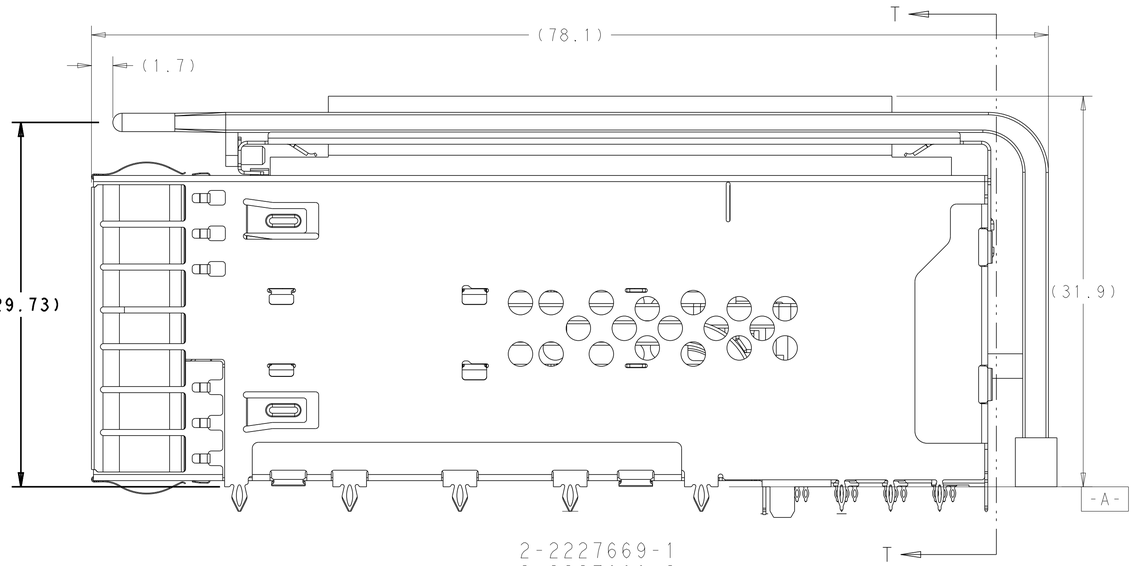

2-2227669-1
2-2227669-2

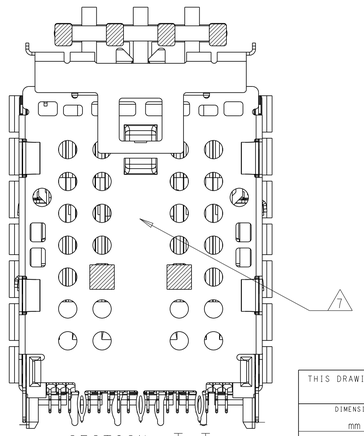

SECTION T-T
MARKING LOCATION FOR
2-2227669-1
2-2227669-2

THIS DRAWING IS A CONTROLLED DOCUMENT.

DIMENSIONS: mm

TOLERANCES UNLESS OTHERWISE SPECIFIED:
0 PLC ±-
1 PLC ±0.25
2 PLC ±0.15
3 PLC ±-
4 PLC ±-
ANGLES ±-

MATERIAL - SEE NOTE 1
FINISH - -

DWN M.SHIRK 16JAN2013
CHK D.SZCZESNY 16JAN2013
APVD -
PRODUCT SPEC 108-60102
APPLICATION SPEC 114-60015
WEIGHT -

TE Connectivity

NAME CAGE AND CONNECTOR ASSEMBLY, WITH EMI SPRING FINGERS, THRU BEZEL, 2X1, ZQSFP+ STACKED

SIZE A1 | CAGE CODE 00779 | DRAWING NO C-2227669 | RESTRICTED TO -

CUSTOMER DRAWING | SCALE 1:1 | SHEET 2 OF 8 | REV F6

4805 (3/11)

THIS DRAWING IS UNPUBLISHED. RELEASED FOR PUBLICATION 20
© COPYRIGHT 20 BY TYCO ELECTRONICS CORPORATION ALL RIGHTS RESERVED.

LOC	DIST
GP	00

REVISIONS

P	LTR	DESCRIPTION	DATE	DWN	APVD
	-	SEE SHEET 1	-	-	-

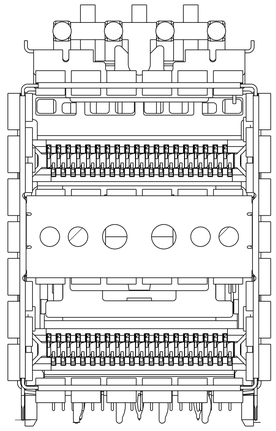

2-2227669-3
ALL ROUND INDICATORS, 8LP
SCALE 4:1

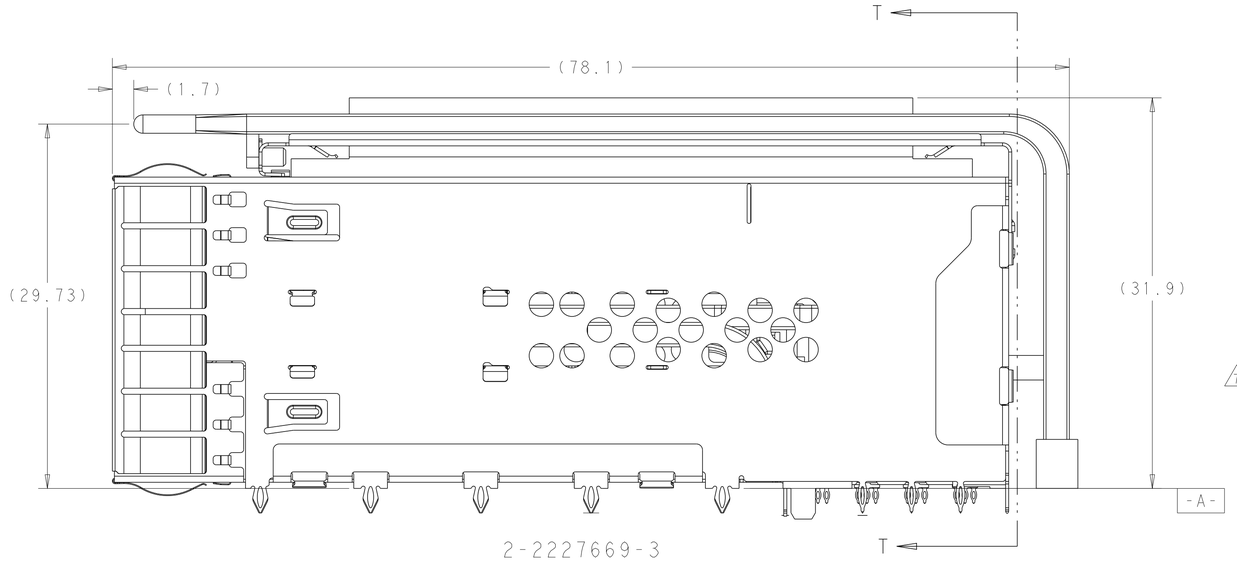

2-2227669-3

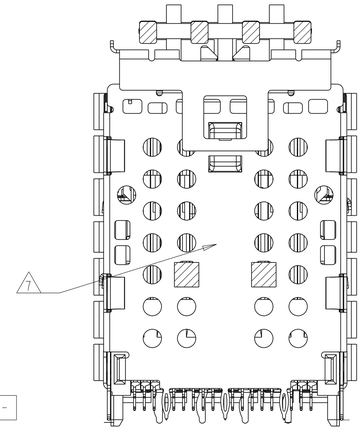

SECTION T-T
2-2227669-3

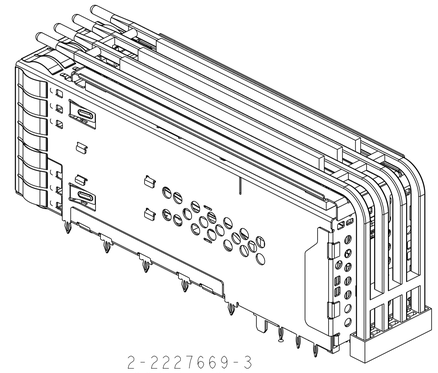

2-2227669-3
SCALE 2:1

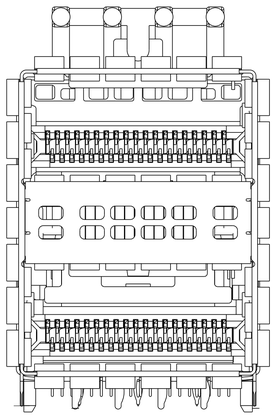

2-2227669-4
4 UPPER LP
SCALE 4:1

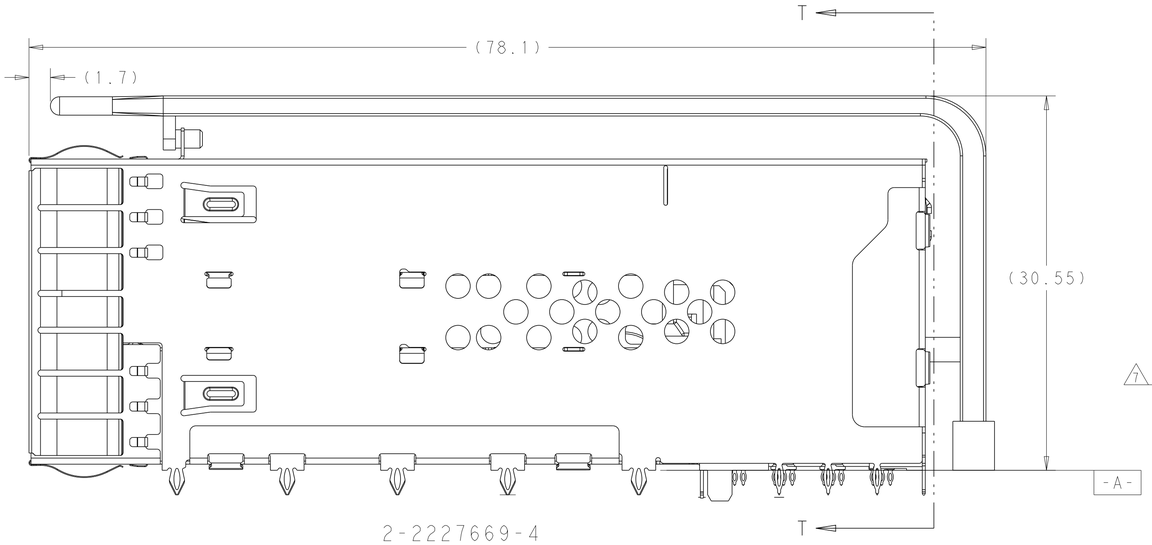

2-2227669-4

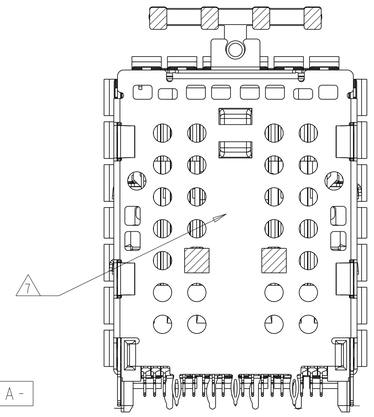

SECTION T-T
2-2227669-4

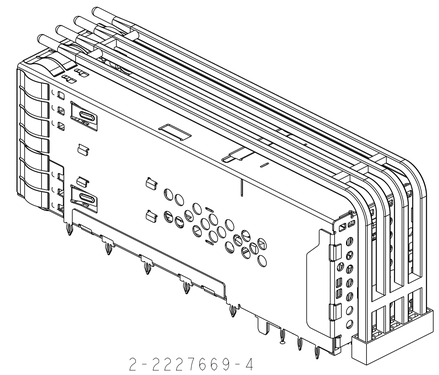

2-2227669-4
SCALE 2:1

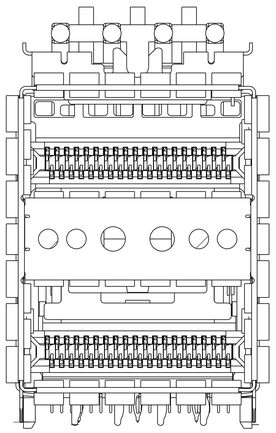

2-2227669-5
ALL ROUND INDICATORS, 8LP
SCALE 4:1

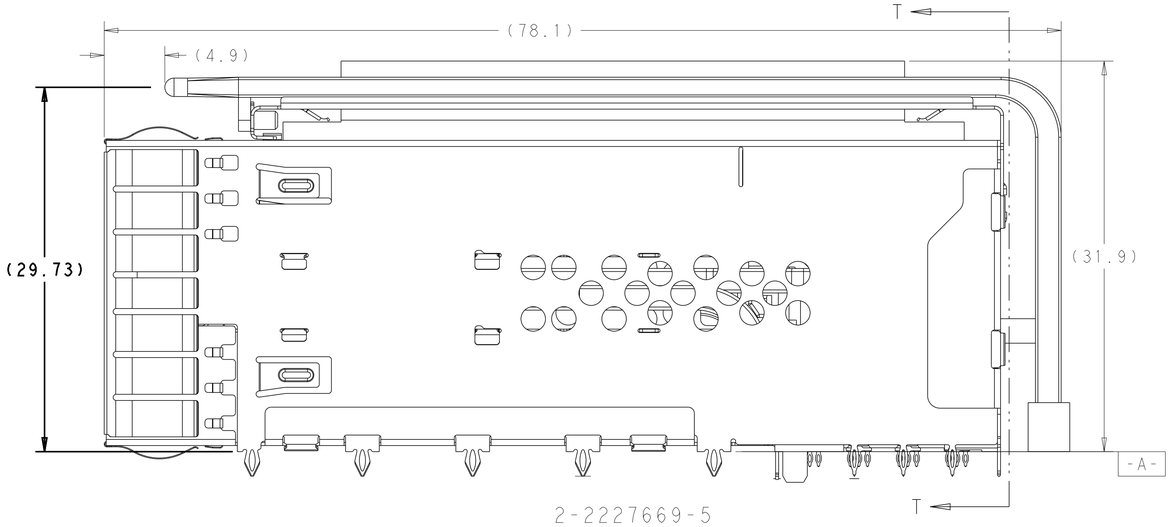

2-2227669-5

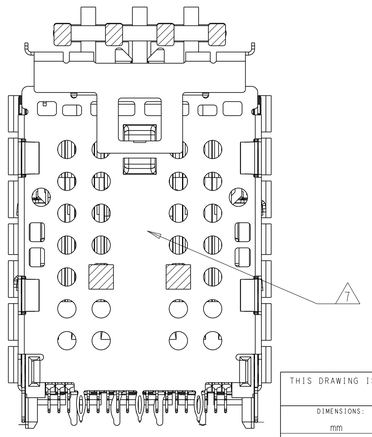

SECTION T-T
2-2227669-5

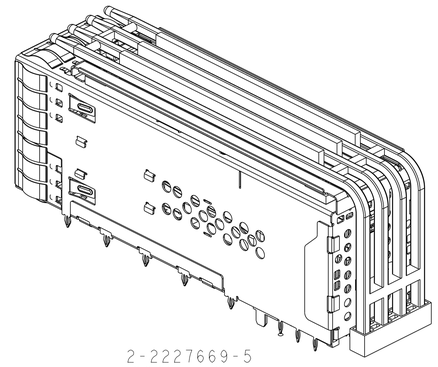

2-2227669-5
SCALE 2:1

THIS DRAWING IS A CONTROLLED DOCUMENT.

DIMENSIONS: mm

TOLERANCES UNLESS OTHERWISE SPECIFIED:
0 PLC ±-
1 PLC ±0.25
2 PLC ±0.15
3 PLC ±-
4 PLC ±-
ANGLES ±-

MATERIAL - SEE NOTE 1
FINISH - -

DWN M.SHIRK 16JAN2013
CHK D.SZCZESNY 16JAN2013
APVD -
PRODUCT SPEC 108-60102
APPLICATION SPEC 114-60015
WEIGHT -

TE Connectivity

NAME CAGE AND CONNECTOR ASSEMBLY, WITH EMI SPRING FINGERS, THRU BEZEL, 2X1, ZQSFP+ STACKED

SIZE	CAGE CODE	DRAWING NO	RESTRICTED TO
A1	00779	C-2227669	-

CUSTOMER DRAWING SCALE 1:1 SHEET 3 OF 8 REV F6

4805 (3/11)

THIS DRAWING IS UNPUBLISHED. RELEASED FOR PUBLICATION 20
© COPYRIGHT 20 BY TYCO ELECTRONICS CORPORATION ALL RIGHTS RESERVED.

LOC	DIST
GP	00

REVISIONS

P	LTR	DESCRIPTION	DATE	DWN	APVD
	-	SEE SHEET 1	-	-	-

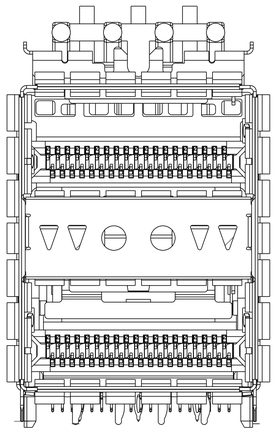

2-2227669-6
ALL INDICATOR DOWN, 8LP

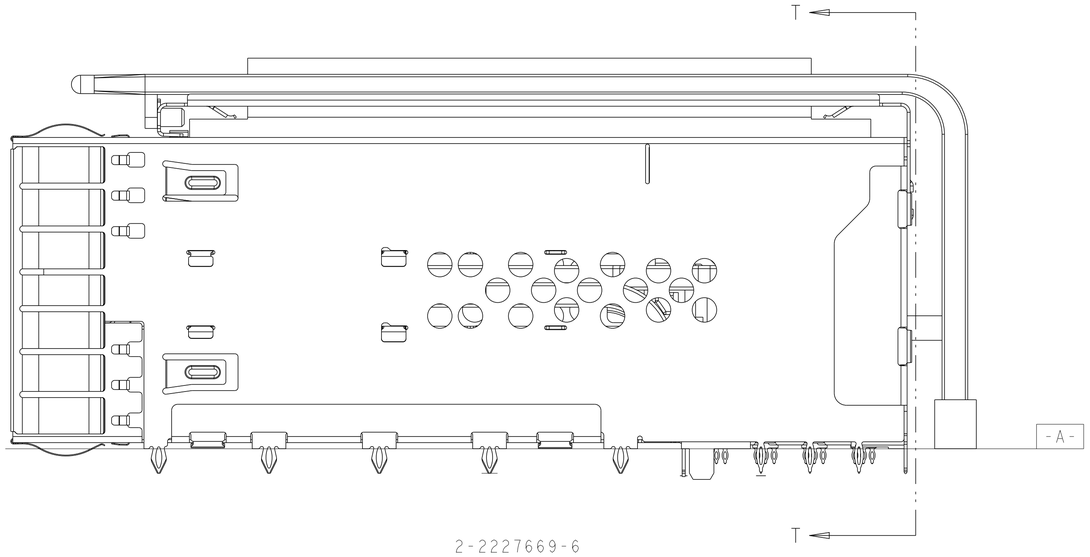

2-2227669-6

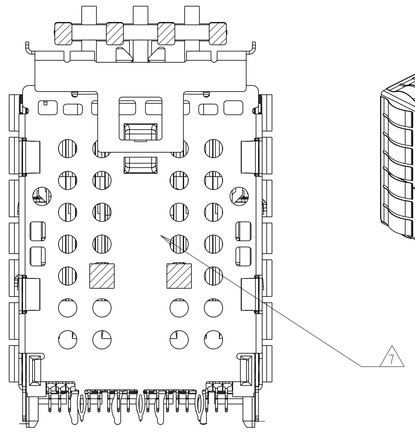

SECTION T-T
2-2227669-6

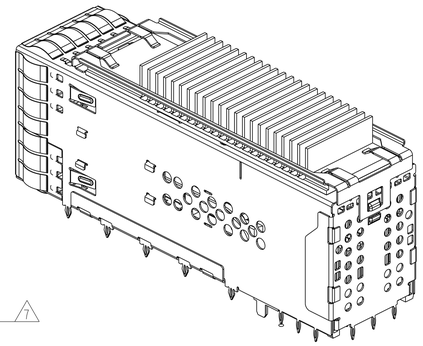

2-2227669-6
SCALE 2:1

2-2227669-7
SAME AS 2-2227669-1 EXCEPT LP ORGANIZER

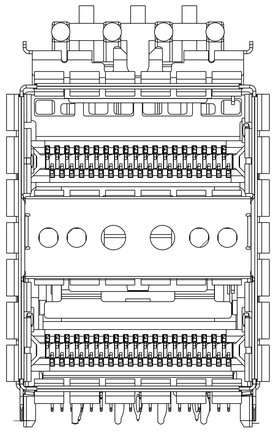

SCALE 4:1

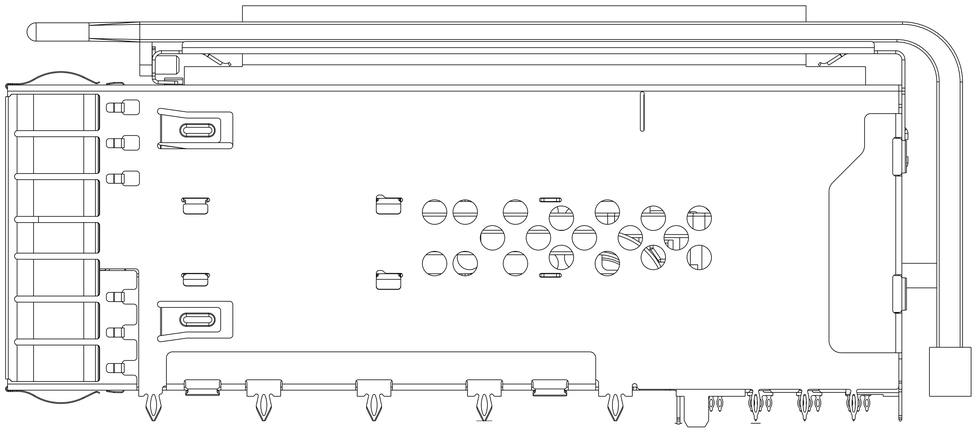

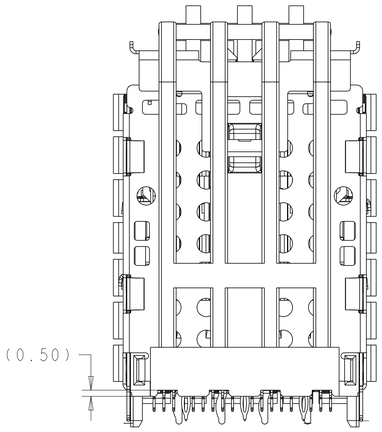

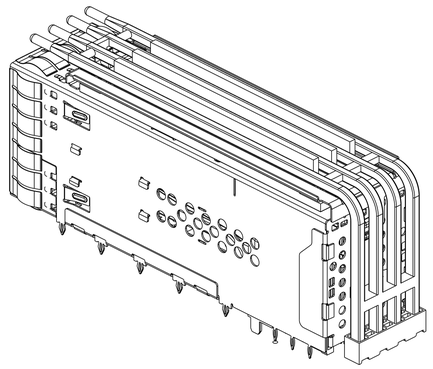

SCALE 2:1

THIS DRAWING IS A CONTROLLED DOCUMENT.

DIMENSIONS: mm

TOLERANCES UNLESS OTHERWISE SPECIFIED:
0 PLC ±-
1 PLC ±0.25
2 PLC ±0.15
3 PLC ±-
4 PLC ±-
ANGLES ±-

MATERIAL - SEE NOTE 1
FINISH - -

DWN M.SHIRK 16JAN2013
CHK D.SZCZESNY 16JAN2013
APVD -
PRODUCT SPEC 108-60102
APPLICATION SPEC 114-60015
WEIGHT -

TE Connectivity

NAME CAGE AND CONNECTOR ASSEMBLY, WITH EMI SPRING FINGERS, THRU BEZEL, 2X1, ZQSFP+ STACKED

SIZE	CAGE CODE	DRAWING NO	RESTRICTED TO
A1	00779	C-2227669	-

CUSTOMER DRAWING SCALE 1:1 SHEET 4 OF 8 REV F6

4805 (3/11)

THIS DRAWING IS UNPUBLISHED. RELEASED FOR PUBLICATION 20
© COPYRIGHT 20 BY TYCO ELECTRONICS CORPORATION ALL RIGHTS RESERVED.

LOC	DIST
GP	00

REVISIONS

P	LTR	DESCRIPTION	DATE	DWN	APVD
	-	SEE SHEET 1	-	-	-

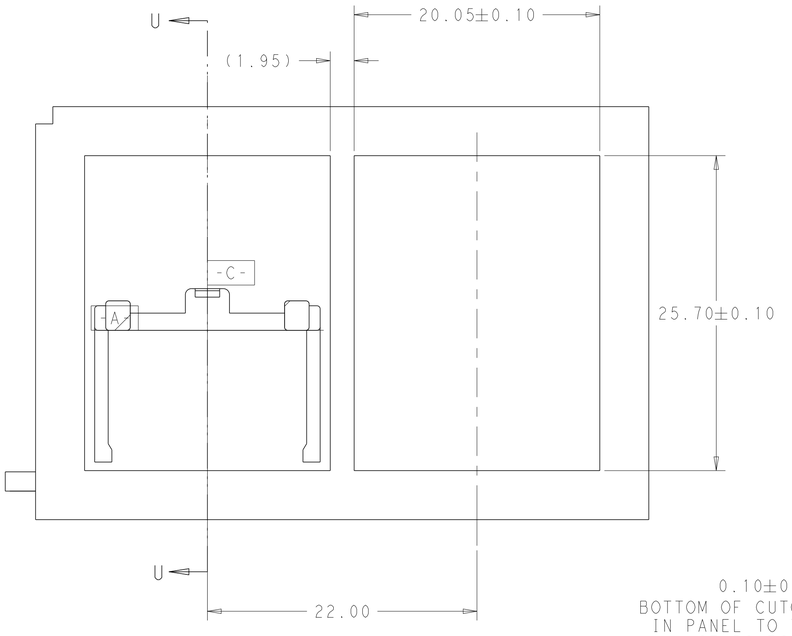

RECOMMENDED PANEL CUTOUT
AND PC BOARD, PANEL POSITION

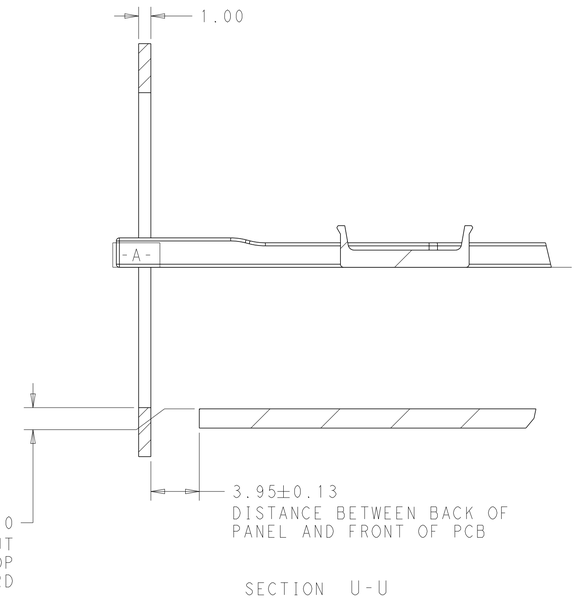

SECTION U-U

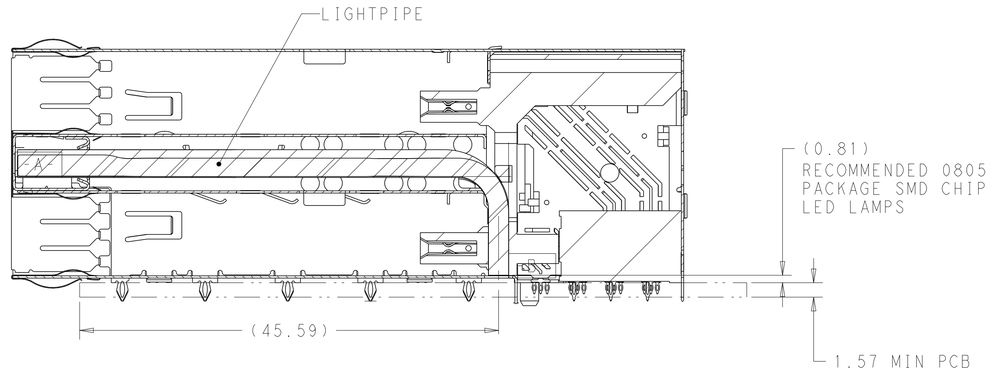

SECTION V-V
SCALE 3:1

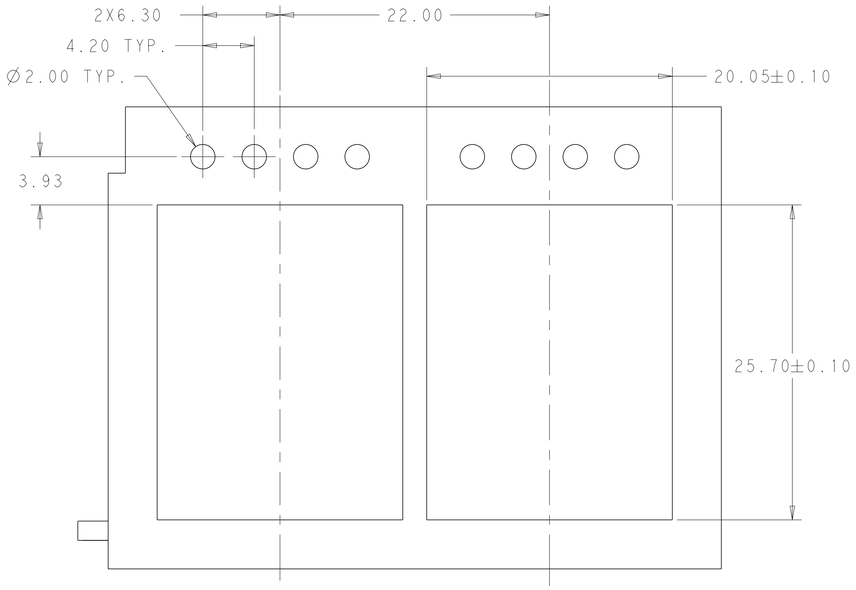

RECOMMENDED PANEL CUTOUT
AND PC BOARD, PANEL POSITION
FOR 2-2227669-1
SCALE 4:1

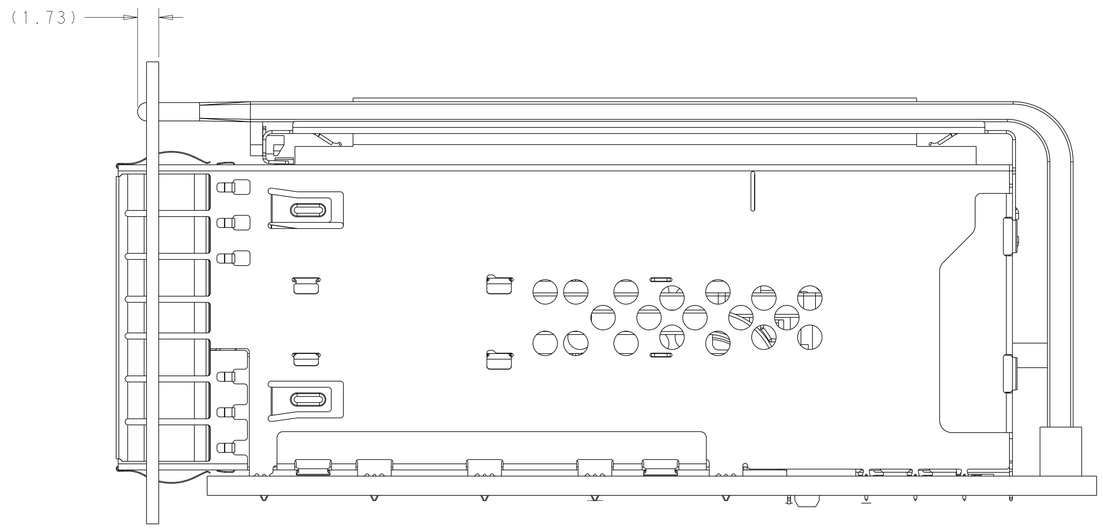

THIS DRAWING IS A CONTROLLED DOCUMENT.

DIMENSIONS: mm

TOLERANCES UNLESS OTHERWISE SPECIFIED:
0 PLC ±-
1 PLC ±0.25
2 PLC ±0.15
3 PLC ±-
4 PLC ±-
ANGLES ±-

MATERIAL - SEE NOTE 1
FINISH - -

DWN M.SHIRK 16JAN2013
CHK D.SZCZESNY 16JAN2013
APVD -
PRODUCT SPEC 108-60102
APPLICATION SPEC 114-60015
WEIGHT -

TE Connectivity

NAME CAGE AND CONNECTOR ASSEMBLY, WITH EMI SPRING FINGERS, THRU BEZEL, 2X1, ZQSFP+ STACKED

SIZE	CAGE CODE	DRAWING NO	RESTRICTED TO
A1	00779	C-2227669	-

CUSTOMER DRAWING SCALE 1:1 SHEET 5 OF 8 REV F6

4805 (3/11)

THIS DRAWING IS UNPUBLISHED. RELEASED FOR PUBLICATION 20
© COPYRIGHT 20 BY TYCO ELECTRONICS CORPORATION ALL RIGHTS RESERVED.

LOC	DIST
GP	00

REVISIONS

P	LTR	DESCRIPTION	DATE	DWN	APVD
	-	SEE SHEET 1	-	-	-

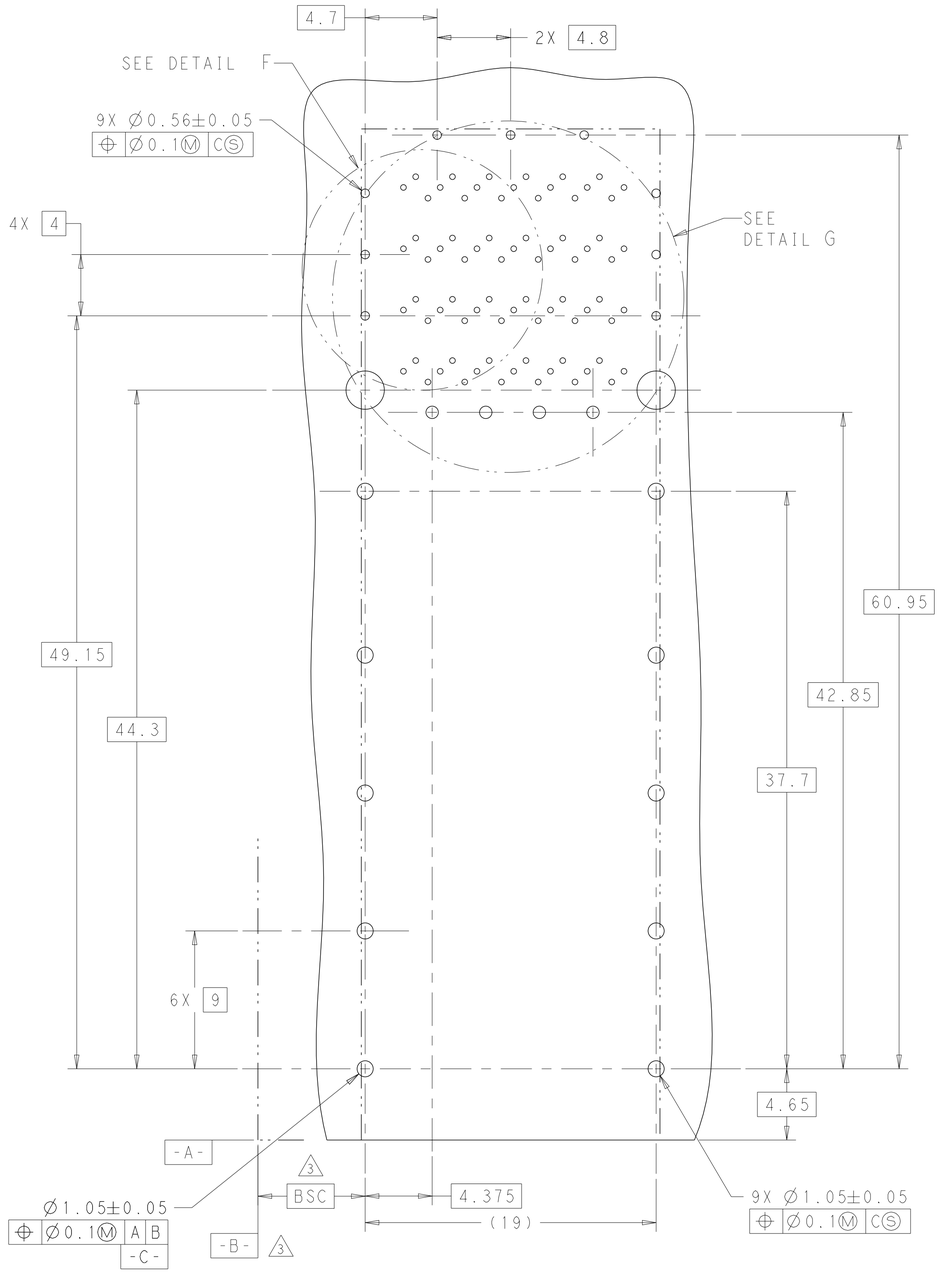

RECOMMENDED PC BOARD LAYOUT
COMPONENT SIDE OF BOARD
SCALE 5:1
(PCB TOLERANCE: ±0.05)

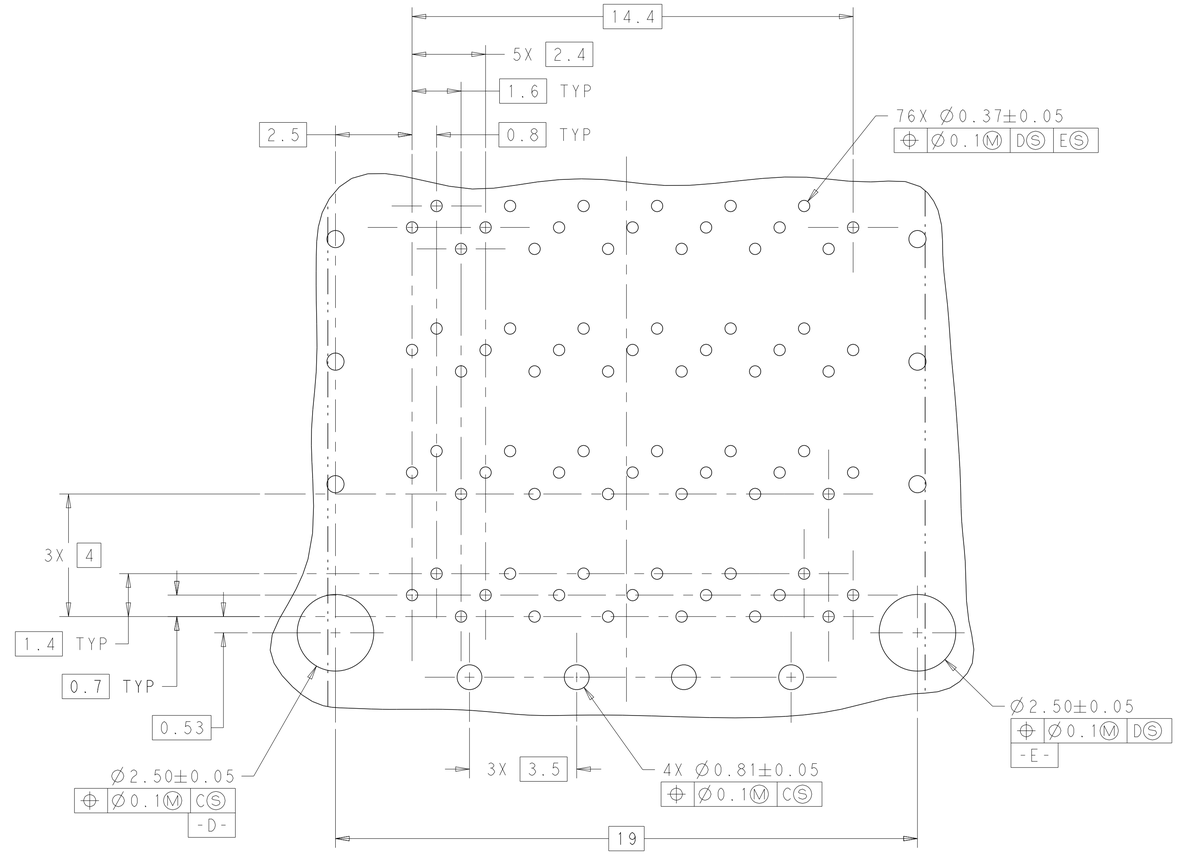

DETAIL G
SCALE 10:1

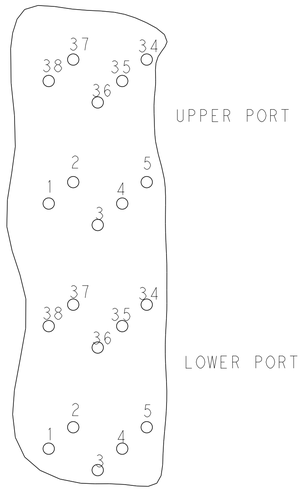

DETAIL F
SCALE 10:1
PIN ASSIGNMENTS

THIS DRAWING IS A CONTROLLED DOCUMENT.

DIMENSIONS: mm

TOLERANCES UNLESS OTHERWISE SPECIFIED:
0 PLC ±-
1 PLC ±0.25
2 PLC ±0.15
3 PLC ±-
4 PLC ±-
ANGLES ±-

MATERIAL - SEE NOTE 1
FINISH - -

DWN M.SHIRK 16JAN2013
CHK D.SZCZESNY 16JAN2013
APVD -
PRODUCT SPEC 108-60102
APPLICATION SPEC 114-60015
WEIGHT -

TE Connectivity

NAME CAGE AND CONNECTOR ASSEMBLY, WITH EMI SPRING FINGERS, THRU BEZEL, 2X1, ZQSFP+ STACKED

SIZE	CAGE CODE	DRAWING NO	RESTRICTED TO
A1	00779	C-2227669	-

CUSTOMER DRAWING | SCALE 1:1 | SHEET 6 OF 8 | REV F6

4805 (3/11)

THIS DRAWING IS UNPUBLISHED. RELEASED FOR PUBLICATION 20
© COPYRIGHT 20 BY TYCO ELECTRONICS CORPORATION ALL RIGHTS RESERVED.

LOC	DIST
GP	00

REVISIONS

P	LTR	DESCRIPTION	DATE	DWN	APVD
	-	SEE SHEET 1	-	-	-

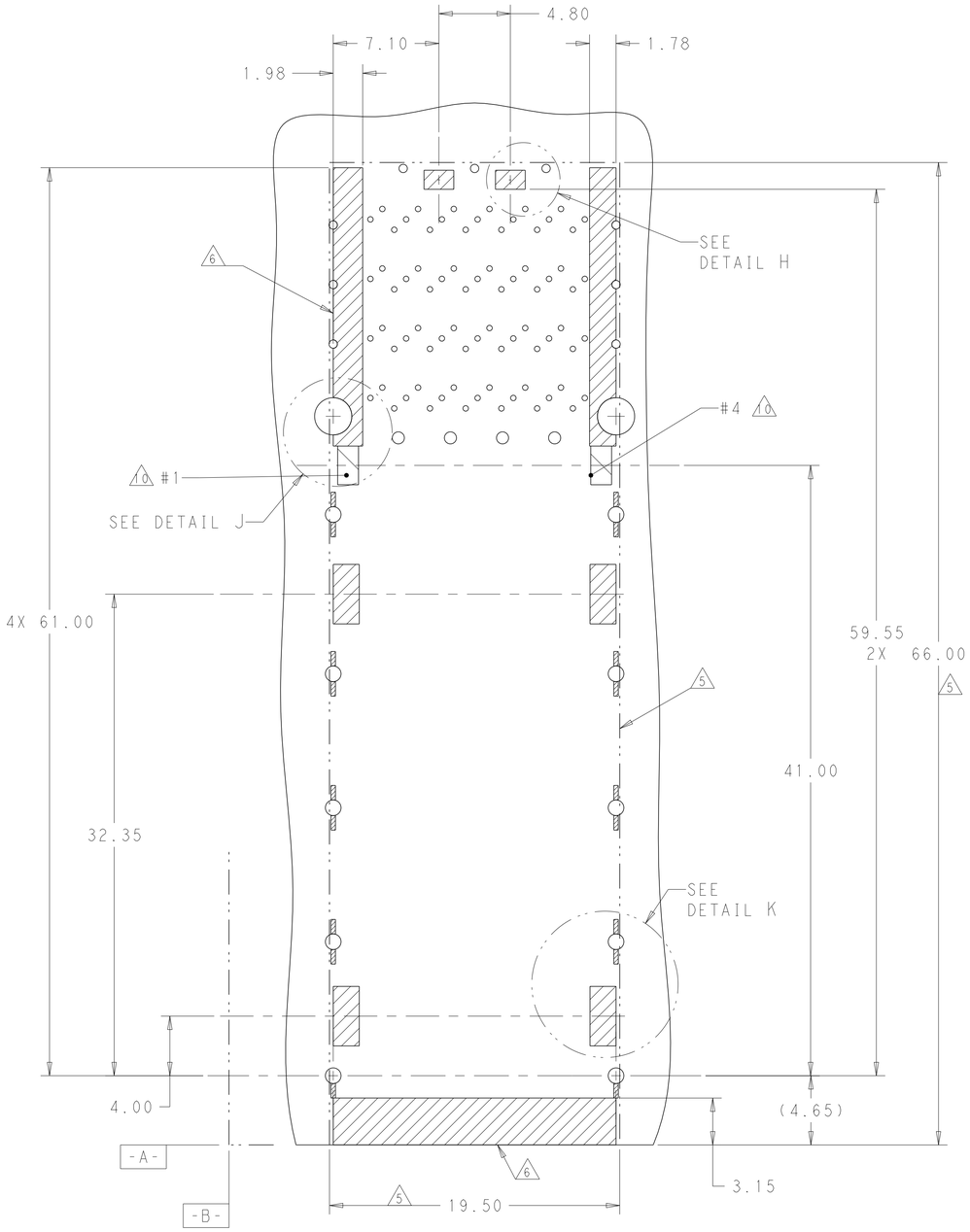

KEEPOUT AREAS FOR 2LP APPLICATION
COMPONENT SIDE OF BOARD
SCALE 5:1

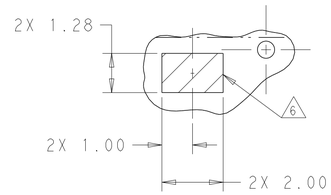

DETAIL H
SCALE 10:1

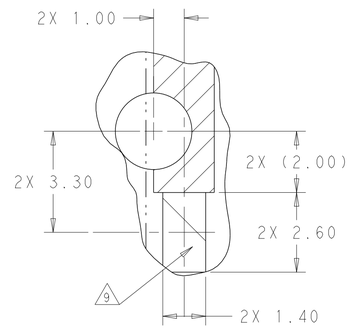

DETAIL J
LED PADS
SCALE 10:1

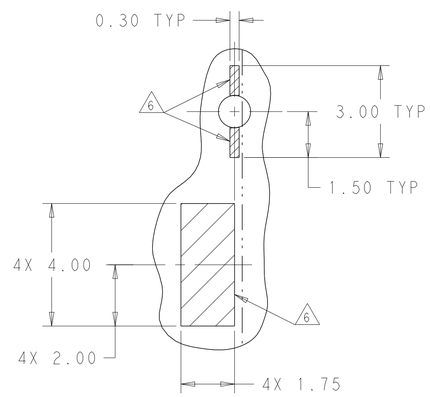

DETAIL K
SCALE 10:1

THIS DRAWING IS A CONTROLLED DOCUMENT.

DIMENSIONS: mm

TOLERANCES UNLESS OTHERWISE SPECIFIED:
0 PLC ±-
1 PLC ±0.25
2 PLC ±0.15
3 PLC ±-
4 PLC ±-
ANGLES ±-

MATERIAL - SEE NOTE 1
FINISH - -

DWN M.SHIRK 16JAN2013
CHK D.SZCZESNY 16JAN2013
APVD -
PRODUCT SPEC 108-60102
APPLICATION SPEC 114-60015
WEIGHT -

TE Connectivity

NAME CAGE AND CONNECTOR ASSEMBLY, WITH EMI SPRING FINGERS, THRU BEZEL, 2X1, ZQSFP+ STACKED

SIZE A1 | CAGE CODE 00779 | DRAWING NO C-2227669 | RESTRICTED TO -

CUSTOMER DRAWING | SCALE 1:1 | SHEET 7 OF 8 | REV F6

4805 (3/11)

THIS DRAWING IS UNPUBLISHED. RELEASED FOR PUBLICATION 20
© COPYRIGHT 20 BY TYCO ELECTRONICS CORPORATION ALL RIGHTS RESERVED.

LOC	DIST
GP	00

REVISIONS

P	LTR	DESCRIPTION	DATE	DWN	APVD
	-	SEE SHEET 1	-	-	-

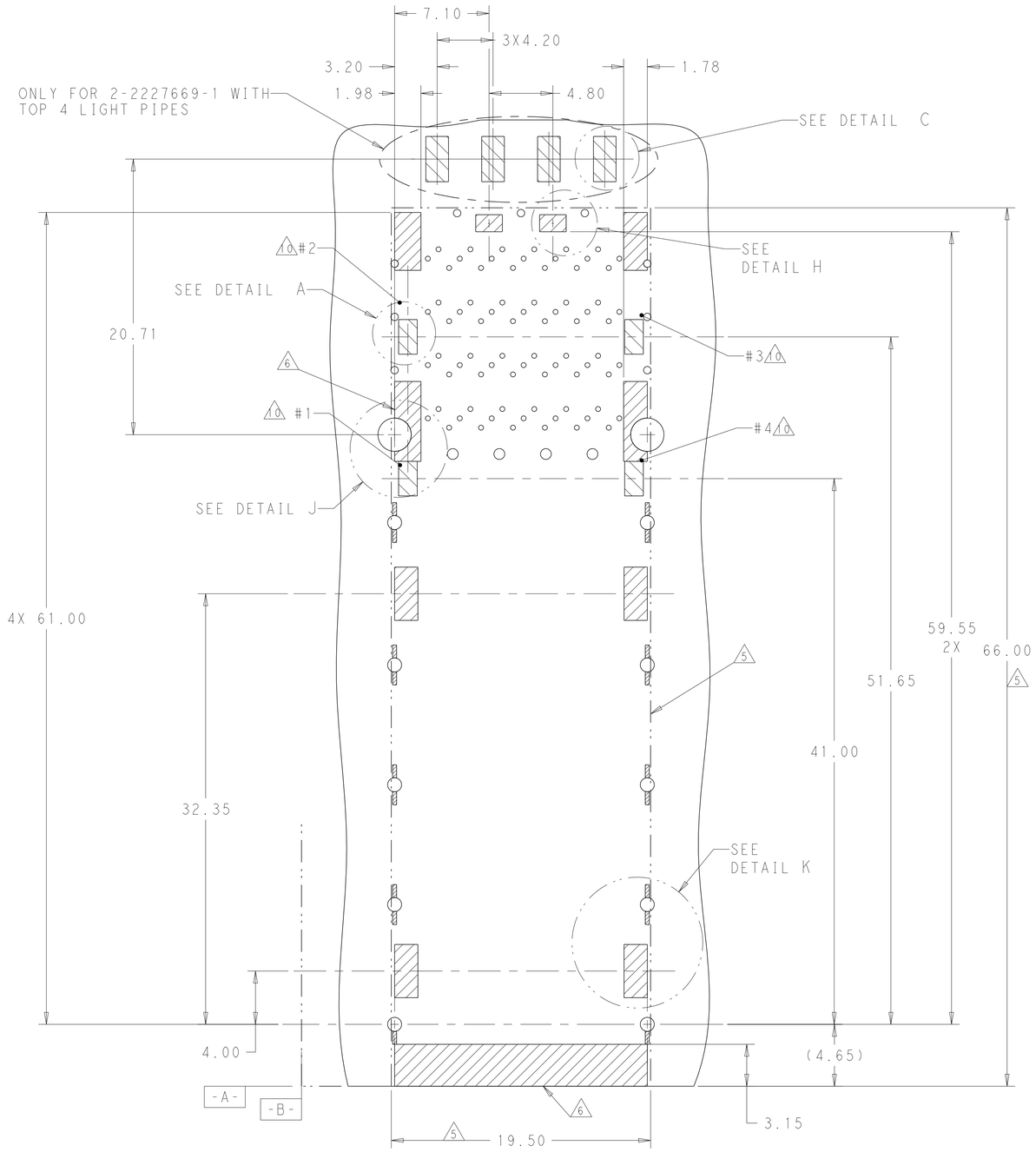

KEEPOUT AREAS FOR 4 LP APPLICATON
COMPONENT SIDE OF BOARD
SCALE 5:1

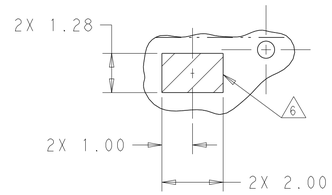

DETAIL H
SCALE 10:1

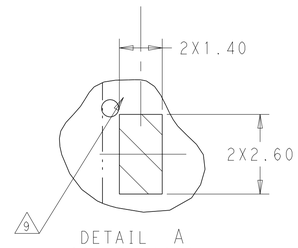

DETAIL A
SCALE 10:1

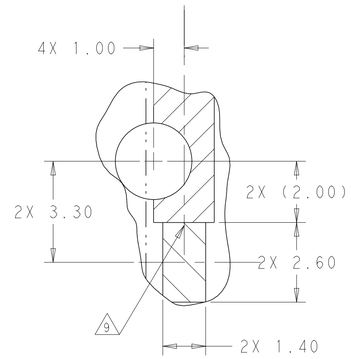

DETAIL J
LED PADS
SCALE 10:1

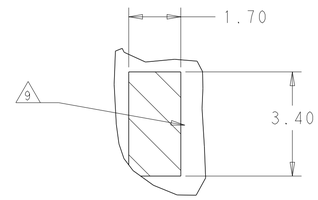

DETAIL C
SCALE 10:1

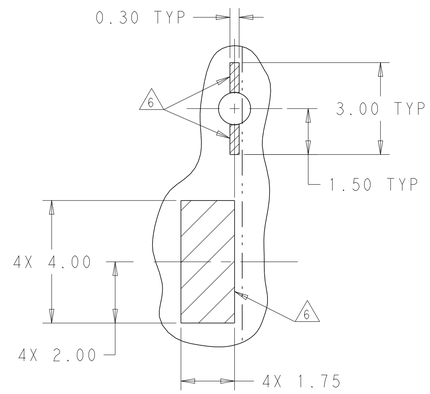

DETAIL K
SCALE 10:1

THIS DRAWING IS A CONTROLLED DOCUMENT.

DIMENSIONS: mm

TOLERANCES UNLESS OTHERWISE SPECIFIED:
0 PLC ±-
1 PLC ±0.25
2 PLC ±0.15
3 PLC ±-
4 PLC ±-
ANGLES ±-

MATERIAL - SEE NOTE 1
FINISH - -

DWN M.SHIRK 16JAN2013
CHK D.SZCZESNY 16JAN2013
APVD -
PRODUCT SPEC 108-60102
APPLICATION SPEC 114-60015
WEIGHT -

TE Connectivity

NAME CAGE AND CONNECTOR ASSEMBLY, WITH EMI SPRING FINGERS, THRU BEZEL, 2X1, ZQSFP+ STACKED

SIZE A1 | CAGE CODE 00779 | DRAWING NO C-2227669 | RESTRICTED TO -

CUSTOMER DRAWING | SCALE 1:1 | SHEET 8 OF 8 | REV F6

4805 (3/11)