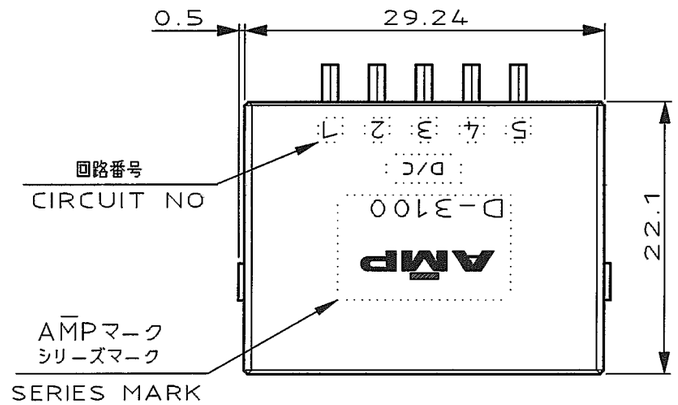


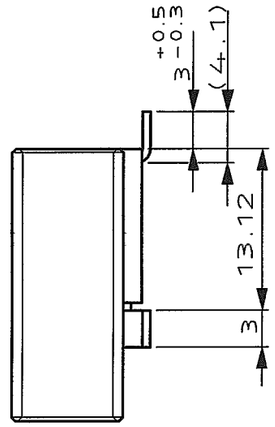


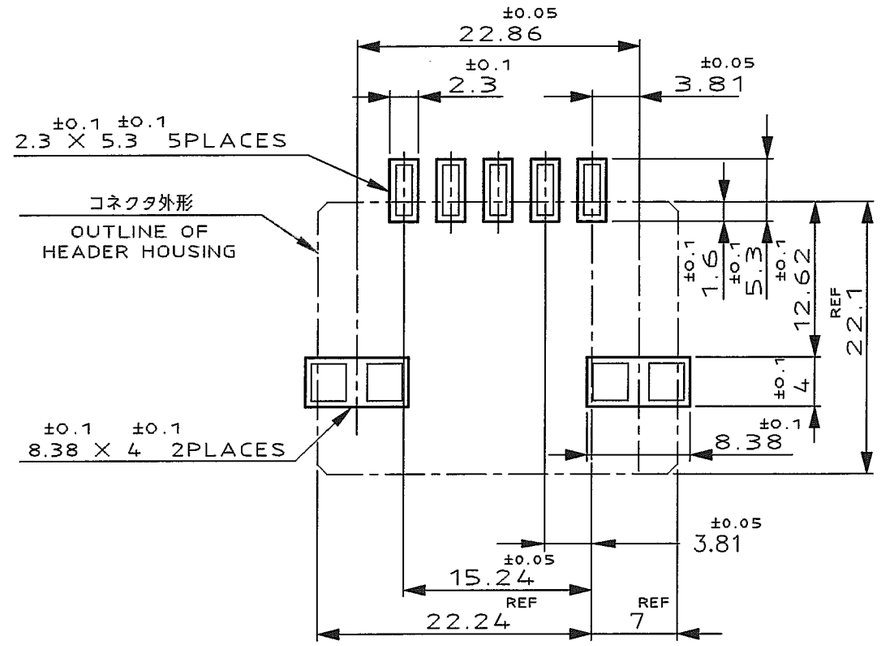


推奨基板取付け寸法

（非累積公差）
（コネクタ搭載面）

RECOMEND BOARD PATTERN
(NOT ACCUMULATE TOLERANCE)
(CONNECTOR MOUNT SIDE)

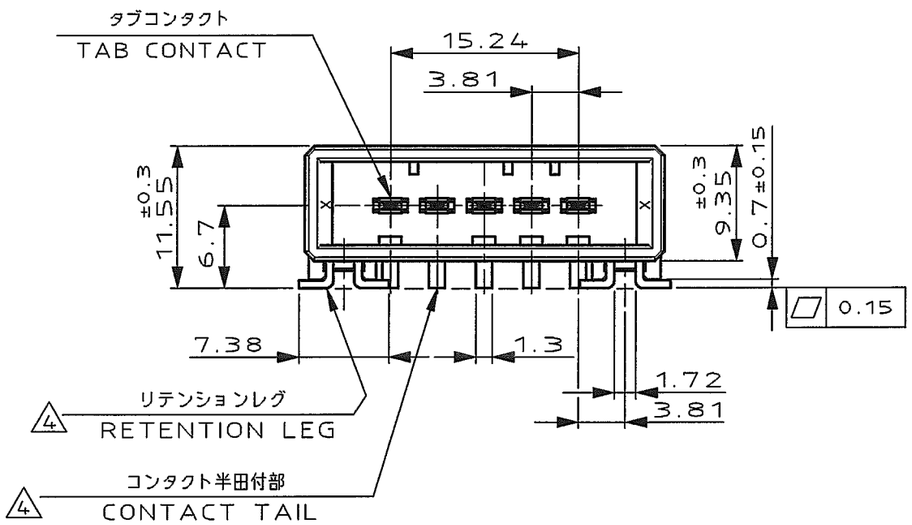


NOTES

1. MATERIAL:HOUSING:GLASS FILED THERMO PLASTIC ,UL94V-0
   CONTACT:COPPER ALLOY
   RETENTION LEG:COPPER ALLOY
2. FINISH(CONTACT AREA): 0.38μm PdNi & Au PLATING OVER NICKEL
3. FINISH(CONTACT AREA): 0.76μm PdNi & Au PLATING OVER NICKEL
4. FINISH(RETENTION LEG): TIN PLATED (SOLDER TYING) OVER NICKEL

| | | |
|---|---|---|
| 4 | 3 | 1-177662-3 |
| 4 | 2 | 1-177662-2 |
| (FINISH) | | 製品番号 (PART NO.) |

| LTR | REVISION RECORD | DR | CHK | DATE |
|---|---|---|---|---|
| B | REVISED PER ECR-25-250788 | F.Z | R.B | 16JAN 2025 |
| A | REVISED(FJD0-0039-03) | TS | S.M | 6/2 '07 |
| 0 | RELEASED (FJ00-0284-93) | NM | SM | '93 9/30 |

Copyright © 1993
AMP(Japan) LTD.
ALL RIGHTS RESERVED.

TE Connectivity

| | |
|---|---|
| WIRE RANGE | mm²(AWG − ) |
| INSULATION DIA | − mmφ |
| MATERIAL | SEE NOTE 注記参照 |
| FINISH | SEE NOTE 注記参照 |
| DR. | 20 SEP 93 N.Matsubara |
| DE. | 20 SEP 93 N.Matsubara |
| CHK. | 30 SEP 93 S.MANABE |
| APP. | 30 SEP 93 S.MANABE |

NAME: 5 POS SINGLE ROW SMT TYPE HORIZONTAL HDR ASS'Y FOR DYNAMIC 3100

一般公差 (GENERAL TOLERANCE)
10以下 ±0.2
10を超え 30以下 ±0.3
30を超え100以下 ±0.4
角度 ±3°

| SIZE | LOC | NUMBER |
|---|---|---|
| A3 | J | C-177662 |

| SCALE | REV. | SHEET |
|---|---|---|
| 2-1 | B | 1 OF 1 |

NUMBER 177662
3rd ANGLE PROJECTION
METRIC
PROJ NO.392-610
DIMENSIONS IN MILLIMETERS. DO NOT SCALE PRINT
PRINT DIST

AMP-J
REV.10/'83

(CUSTOMER DRAWING) 顧客用図面