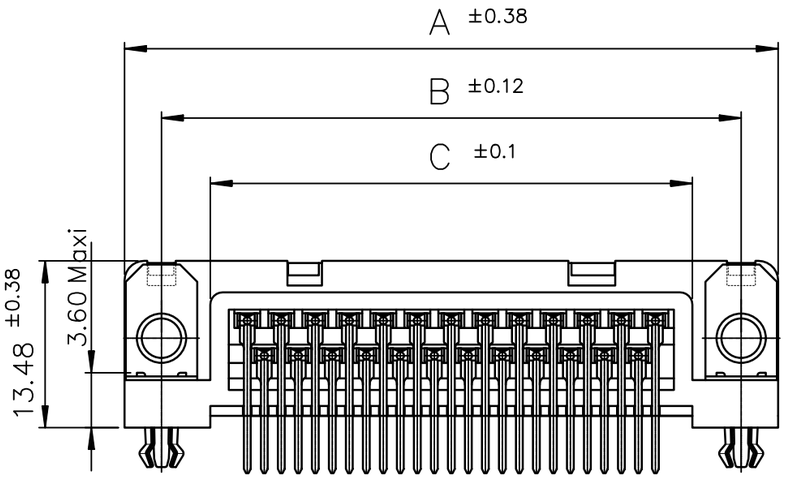

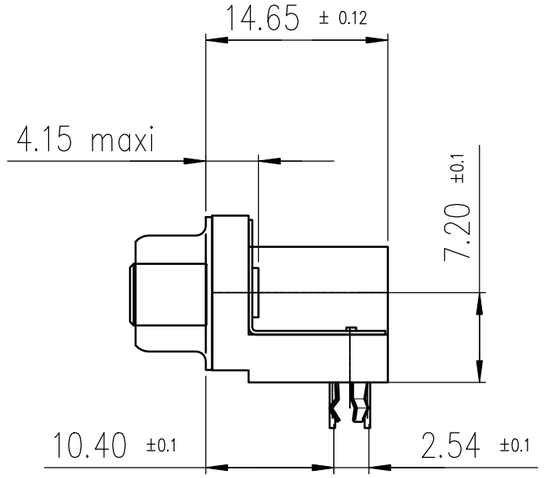

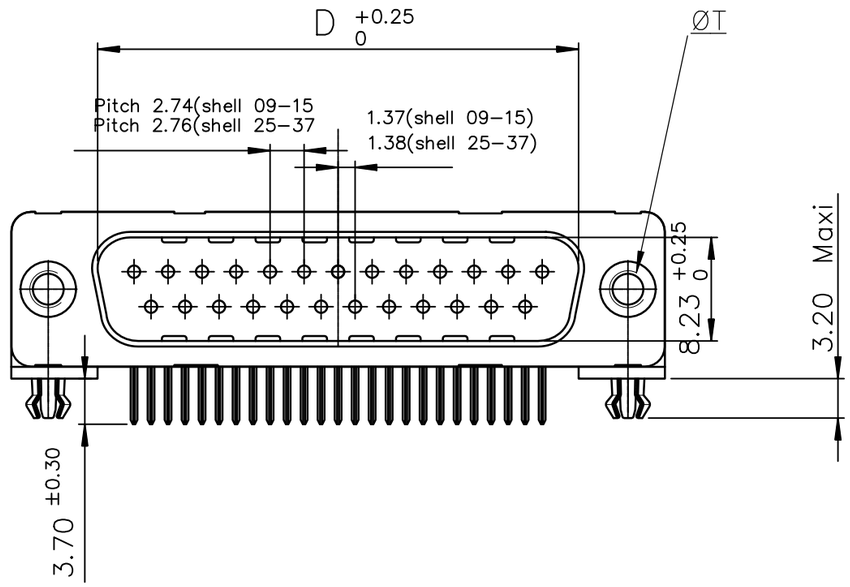

PC card drilling dimensions(after plating)

(thickness 1.60±0.20mm)

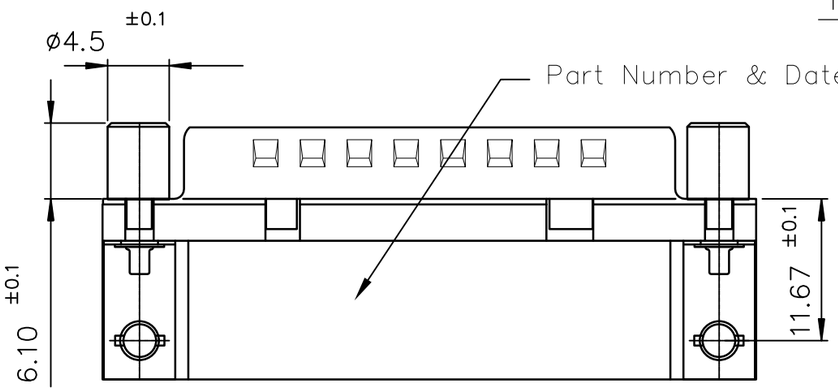

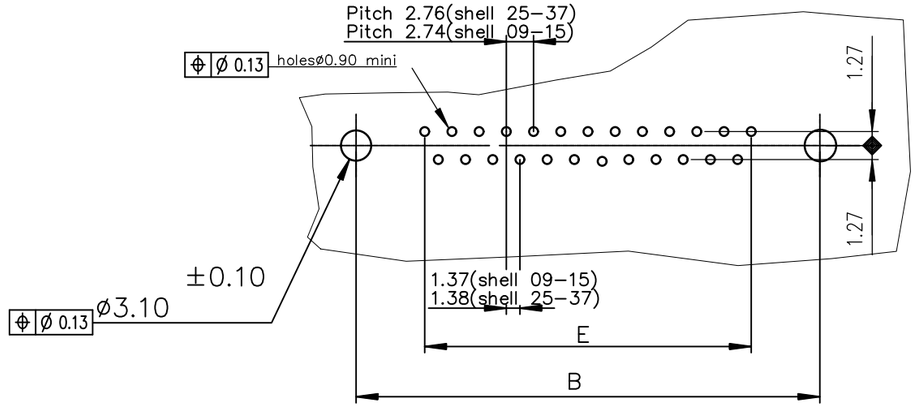

LF FOR LEAD FREE

SHELL	A±0.38	B±0.12	C±0.10	D +0.25 0	E±0.07	G +0.25 0	PART NUMBER	PART NUMBER
09	30.81	24.99	16.96	16.79	10.96	5.90	D09P13B4G*00**	D09P13B6G*00**
15	39.14	33.32	25.18	25.12	19.18	5.90	D15P13B6G*00**	D15P13B6G*00**
25	53.03	47.04	39.12	38.84	33.12	5.70	D25P13B4G*00**	D25P13B6G*00**
37	69.32	63.50	55.68	55.30	49.68	5.70	D37P13B4G*00**	D37P13B6G*00**
							200 MATING CYCLES	500 MATING CYCLES

Threaded ØT M3 = I
Threaded ØT 4.40 = V

GENERAL CHARACTERISTICS AND ROHS DETAILS REFER DWG.NO:C01–8646–0000

mat'l. code SEE NOTES				surface ISO 1302	tolerance ISO 406 ISO 1101	projection	product family D–SUB
ltr	ecn no	dr	date	tolerances unless otherwise specified			title DELTA–D RIGHT ANGLE MALE CNR SCREWLOCK, HARPONN & METAL PLATE
F	ELX–I–279201	GM	2026–02–23	angles	linear .0±.3	mm	
					.00		
				0°±x2	.000±.005	scale –	
				dr	JOHN SLEEBA 1994–08–02	Amphenol FCi	dwg no C01–8646–0279 sheet 1 of 1 size A3
				engr	GREGAR M 2026–02–23		
				chr	GREGAR M 2026–02–23		
				appd	ALEX BABU 2026–02–23		type Product Customer Drawing
sheet index	revision	F					
	sheet	1					

© 2016 AFCI