© – TE Connectivity. All Rights Reserved.

REVISIONS					
P	LTR	DESCRIPTION	DATE	DWN	APVD
	A3	REVISED AS PER ECR-23-169440.	19APR2023	JK	WH

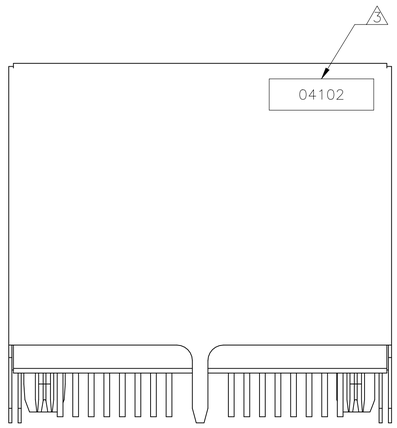

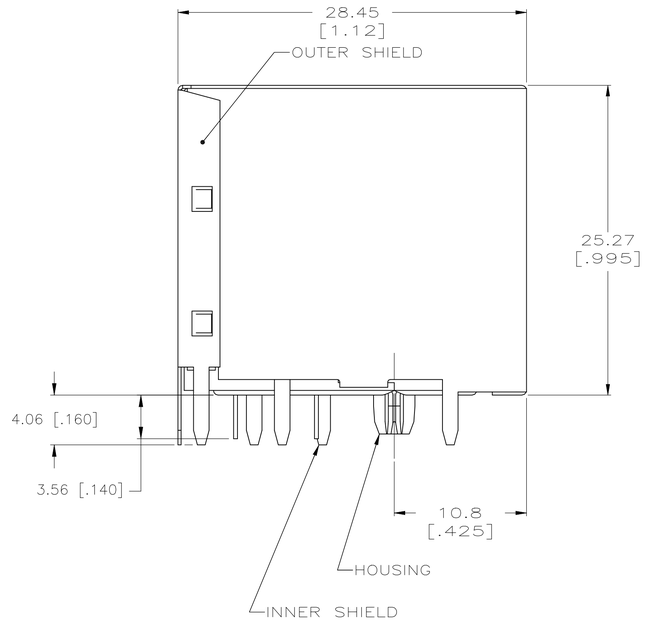

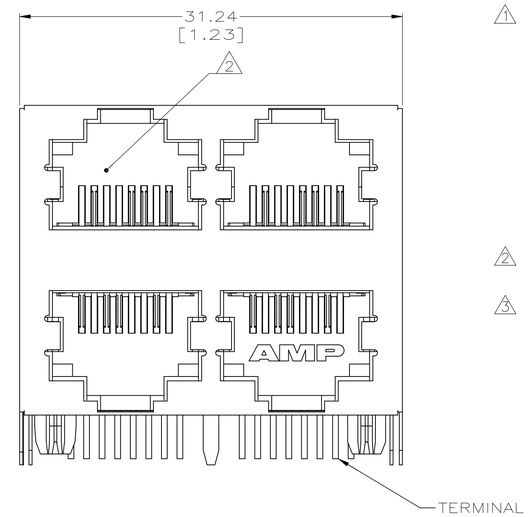

1. MATERIAL:
HOUSING – PCT POLYESTER, BLACK, UL94V-0.
OVERMOLDED TERMINAL ARRAY – PBT, BROWN.
TERMINALS – 0.33 [.013] THICK PHOS BRONZE PLATED WITH 1.27um [.000050] MIN THICK HARD GOLD IN LOCALIZED AREA AND 3.81um [.000150] MIN THICK MATTE TIN IN SOLDER AREA OVER 1.27um [.000050] MIN THICK NICKEL UNDERPLATE.
OUTER SHIELD AND INNER SHIELD – 0.25 [.010] THICK COPPER ALLOY PLATED WITH 1.27 um [.000050] MINMUM NICKEL AND 2.03 um [.000080] MINIMUM HOT TIN DIP ON PCB GROUND TABS.

2. JACK CAVITY CONFORMS TO FCC RULES AND REGULATIONS, PART 68 SUBPART F.

3. DATE CODE LOCATED ON REAR OF PART APPROXIMATELY AS SHOWN:
FIRST 2 DIGITS ARE LAST 2 DIGITS OF YEAR,
SECOND 2 DIGITS ARE MANUFACTURING WORK WEEK,
LAST DIGIT IS DAY OF WEEK, WITH SUNDAY = 1.

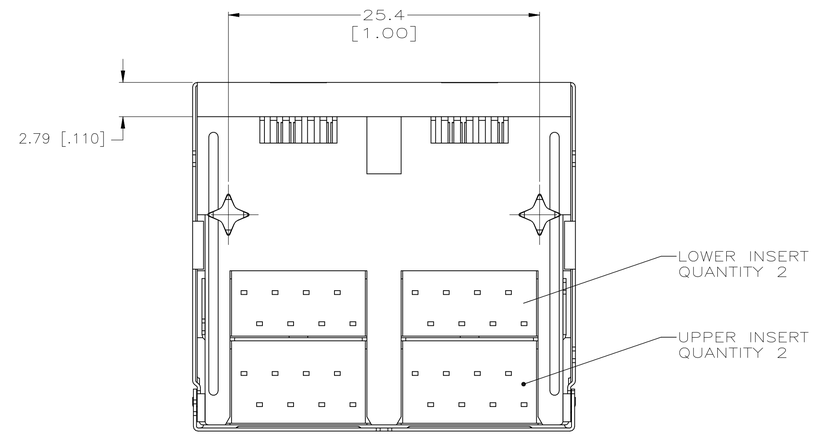

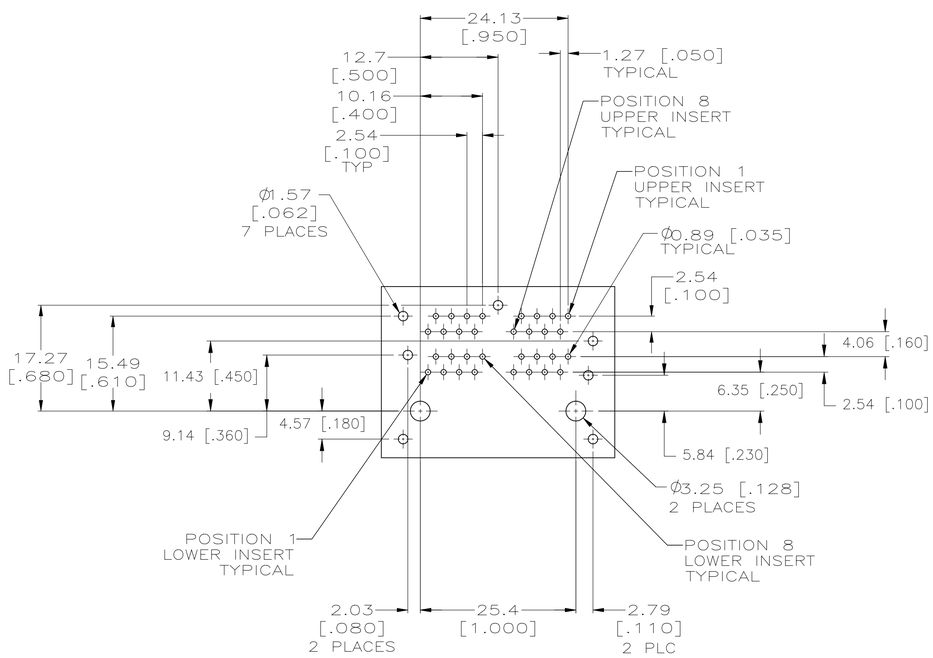

PC BOARD LAYOUT VIEWED FROM COMPONENT SIDE
SCALE 2:1

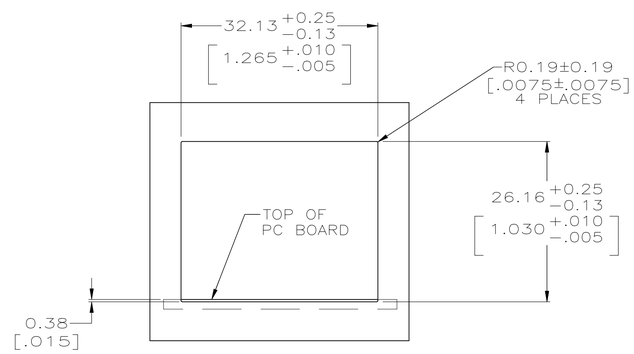

SUGGESTED PANEL CUTOUT DIMENSIONS
SCALE 2:1

THIS DRAWING IS A CONTROLLED DOCUMENT.	DWN 14JUN2005 A. FERNANDEZ-DOCK5	TE Connectivity	5569255-1 PART NUMBER
DIMENSIONS: mm [INCHES] / TOLERANCES UNLESS OTHERWISE SPECIFIED: 0 PLC ± – ; 1 PLC ± – ; 2 PLC ± 0.25[.01] ; 3 PLC ± 0.13[.005] ; 4 PLC ± – ; ANGLES ± –	CHK 14JUN2005 J. WESTMAN ; APVD 14JUN2005 S. FLICKINGER ; PRODUCT SPEC 108-1163-2 ; APPLICATION SPEC 114-2048	NAME STACKED MODULAR JACK ASSEMBLY, 2 X 2 PORT, 8 POSITION, SHIELDED, PRINTED CIRCUIT BOARD GROUND, CATEGORY 5	
MATERIAL 1 / FINISH 1	WEIGHT 0.000000	SIZE A1 / CAGE CODE 00779 / DRAWING NO C-5569255	RESTRICTED TO –
	CUSTOMER DRAWING	SCALE 4:1 / SHEET 1 OF 1	REV A3

4805 (1/15)