THIS DRAWING IS UNPUBLISHED. RELEASED FOR PUBLICATION -,- .
© COPYRIGHT - By - ALL RIGHTS RESERVED.

LOC	DIST
FT	0

REVISIONS

P	LTR	DESCRIPTION	DATE	DWN	APVD
	A2	PCB LAYOUT ADDED	24AUG2015	SS	PS

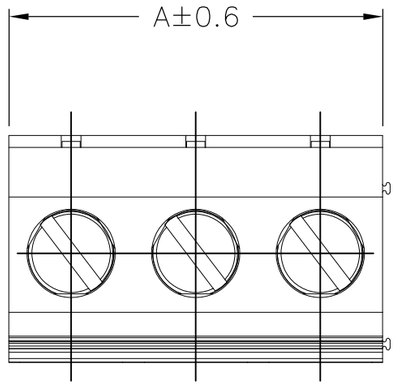

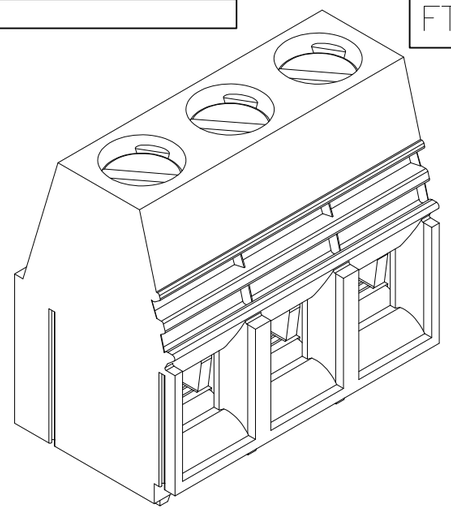

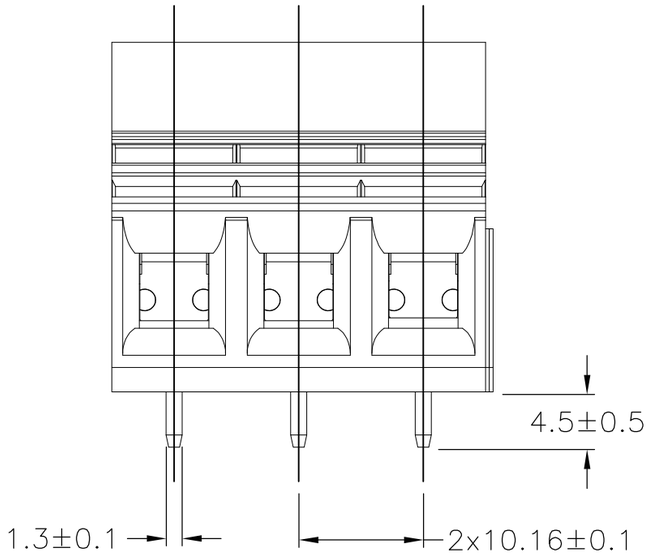

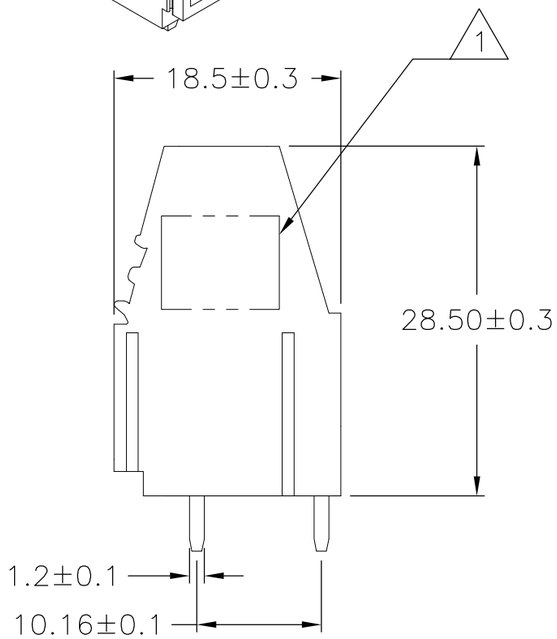

MATERIAL:
HOUSING: PA66, UL94V-0,
COLOR: SEE TABLE
PIN: BRASS, TIN PLATED
WIRE GUARD: BRASS, NICKEL PLATED
SCREWS: M4, STEEL, ZINC PLATED

ELECTRICAL:
VOLTAGE RATING: 300V
CURRENT RATING: 65A
INSULATION RESISTANCE: 2000Mohm/500V
WITHSTANDING VOLTAGE: AC2000V/1 MIN
WIRE RANGE: 26-6 AWG

MECHANICAL:
WORKING TEMP.: -40°C TO +105°C
MAX SOLDERING: +250°C FOR 5 SEC.
TIGHTENING TORQUE: 20.5 IN-LB

1 TE LOGO AND COUNTRY OF ORIGIN AND T CODE, LOCATED IN APPROXIMATE AREA SHOWN.

2 RECOMMENDED PCB MOUNTING HOLE DIA 1.6

RECOMMENDED PCB LAYOUT

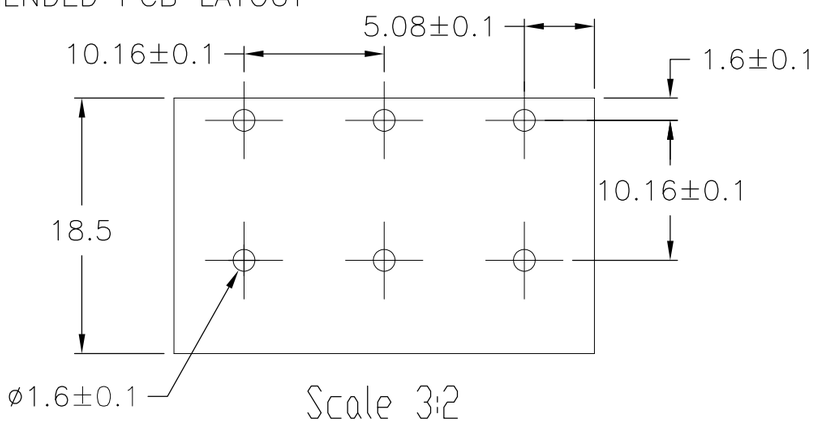

COLOR	DIM A	NO OF POS	PART NUMBER
BLACK	30.48	3	1-1986660-3
BLACK	20.32	2	1-1986660-2
GREEN	30.48	3	1986660-3
GREEN	20.32	2	1986660-2

THIS DRAWING IS A CONTROLLED DOCUMENT.

DIMENSIONS: mm

TOLERANCES UNLESS OTHERWISE SPECIFIED:

0 PLC	± -
1 PLC	± 0.3
2 PLC	± 0.25
3 PLC	± -
4 PLC	± -
ANGLES	± -

MATERIAL -
FINISH -

DWN JR RUTH 27AUG10
CHK CATHY RICHARD 27AUG10
APVD CATHY RICHARD 27AUG10
PRODUCT SPEC —
APPLICATION SPEC —
WEIGHT —

TE Connectivity

NAME
TERMINAL BLOCK, POWER CONNECTOR
10.16 PITCH
—

SIZE	CAGE CODE	DRAWING NO	RESTRICTED TO
A3	00779	C-1986660	—

CUSTOMER DRAWING | SCALE 2:1 | SHEET 1 OF 1 | REV A2