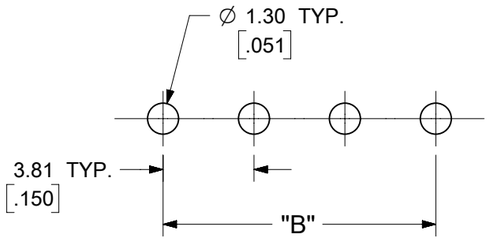

PCB LAYOUT

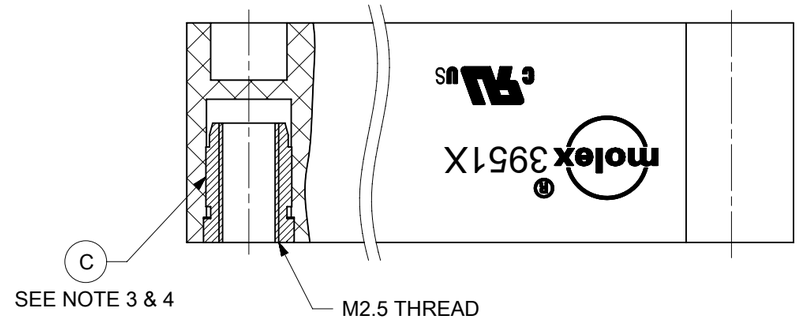

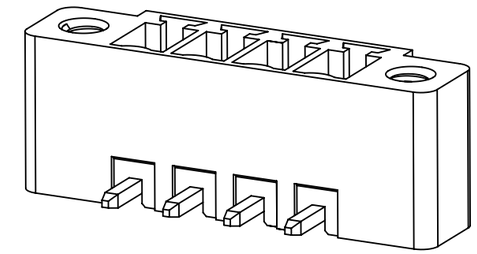

4 CIRCUIT SHOWN

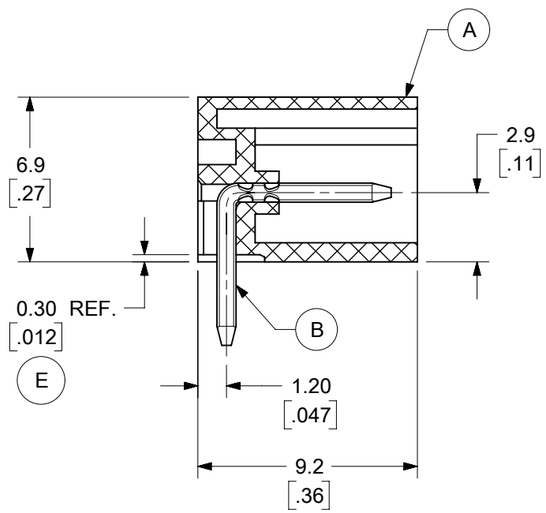

SECTION A-A

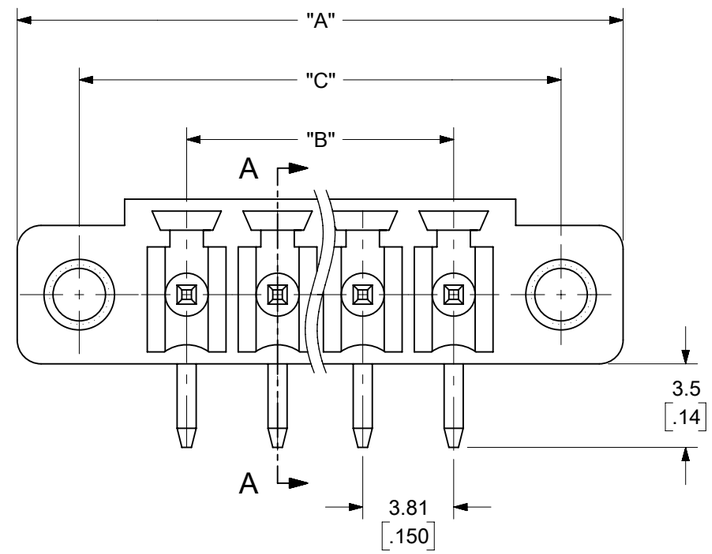

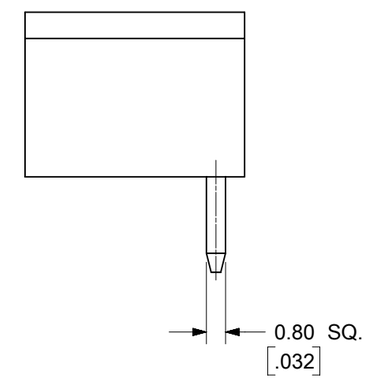

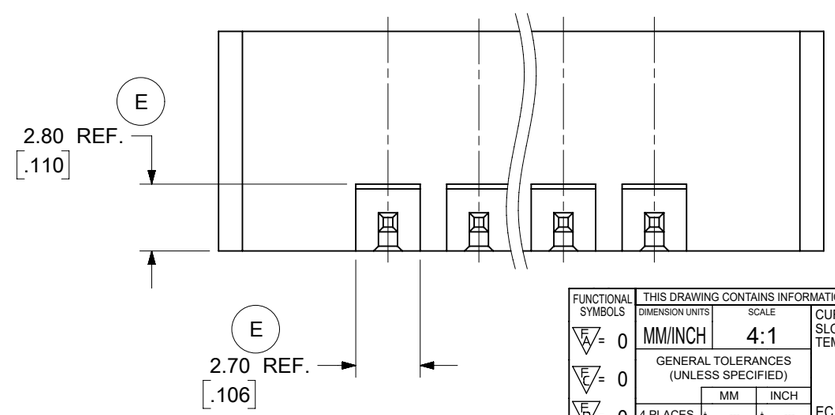

SPECIFICATIONS:

1. MATERIAL:
   (A). BODY: PA66
   (B). TERMINAL: BRASS - TIN PLATED
   (C). THREADED INSERT: BRASS
2. ELECTRICAL RATING: 300V, 8A
3. MAX TORQUE: 1.59 in.lbs. (0.18NM)
4. MINIMUM INSERT RETENTION: 22 lbf (98N)
5. OPERATING TEMPERATURE: -40°C to +105°C
6. MAX. SOLDERING TEMP: 260°C (500°F) FOR 5 SECONDS
7. DIM A (OVERALL LENGTH)= (N x P) + 10.39mm
8. DIM B (CIRCUIT LENGTH)= (N - 1) x P
9. DIM C (MOUNTING HOLES)= (B + 9.0mm)
10. P (PITCH) = 3.81mm (.150")
11. N = NUMBER OF POSITIONS AVAILABLE 2 THROUGH 20
12. PRODUCT SPEC: PS-39500-001
13. PACKAGING SPEC: PK-39516-001
14. SEE DRAWING SD-39501-002 FOR PTH INFO
15. DIMS. SHOWN ARE FOR REFERENCE ONLY.

TOLERANCES			
MM	TOL	INCH	TOL
0-6	±0.25	0-.24	±.010
>6-30	±0.40	.24-1.18	±.016
>30-120	±0.50	1.18-4.76	±.020
>120	±0.80	>4.76	±.031

THIS DRAWING CONTAINS INFORMATION THAT IS PROPRIETARY TO MOLEX ELECTRONIC TECHNOLOGIES, LLC AND SHOULD NOT BE USED WITHOUT WRITTEN PERMISSION

FUNCTIONAL SYMBOLS: FA = 0, FC = 0, FP = 0

DIVISIONAL SYMBOLS

DIMENSION UNITS: MM/INCH — SCALE: 4:1

GENERAL TOLERANCES (UNLESS SPECIFIED)

	MM	INCH
4 PLACES	± ---	± ---
3 PLACES	± ---	± SEE CHART
2 PLACES	± SEE CHART	± SEE CHART
1 PLACE	± SEE CHART	± ---
0 PLACES	± ---	± ---
ANGULAR TOL	± ---	

DRAFT WHERE APPLICABLE MUST REMAIN WITHIN DIMENSIONS

CURRENT REV DESC: MODIFIED VIEWS. ADDED AIR SLOT IN SOLDER AREA. UPDATED LATEST MOLEX TEMPLATE

EC NO: 796889
DRWN: ABENJAMINLW 2024/08/28
CHK'D: DACHAMMER 2024/08/30
APPR: JFMURPHY 2024/08/30

INITIAL REVISION:
DRWN: LROTHAUS 2006/01/09
APPR: JPAWLICK 2006/01/10

THIRD ANGLE PROJECTION | DRAWING: B-SIZE | SERIES: 39516

molex

3.81MM, EURO HEADER
RIGHT ANGLE, MOUNTING

PRODUCT CUSTOMER DRAWING

DOCUMENT NUMBER	DOC TYPE	DOC PART	REVISION
SD-39516-001	PSD	001	E

MATERIAL NUMBER	CUSTOMER	SHEET NUMBER
SEE SHEET 2	GENERAL MARKET	1 OF 3

DOCUMENT STATUS	P1	RELEASE DATE	2024/08/30 17:00:55

FORMAT: Eng-lega-master-tb-prod-B
REVISION: E1
DATE: 2021/05/01

DESCRIPTION	CIRCUIT SIZE	MATERIAL NUMBERS												DIMENSIONAL INFORMATION					
		BLACK						GREEN											
		100% TIN			30 u" GOLD			100% TIN			30 u" GOLD								
		PRINTING OPTIONS			PRINTING OPTIONS			PRINTING OPTIONS			PRINTING OPTIONS			DIM. "A"		DIM. "B"		DIM. "C"	
		None	10AV	11AV	None	10AV	11AV	None	10AV	11AV	None	10AV	11AV	mm	inch	mm	inch	mm	inch
3.81MM, EURO HEADER, RIGHT ANGLE, MOUNTING ENDS	2	395161002	395161102	395161202	395161502	395161602	395161702	395166002	395166102	395166202	395166502	395166602	395166702	18.01	.709	3.81	.150	12.81	.504
3.81MM, EURO HEADER, RIGHT ANGLE, MOUNTING ENDS	3	395161003	395161103	395161203	395161503	395161603	395161703	395166003	395166103	395166203	395166503	395166603	395166703	21.82	.859	7.62	.300	16.62	.654
3.81MM, EURO HEADER, RIGHT ANGLE, MOUNTING ENDS	4	395161004	395161104	395161204	395161504	395161604	395161704	395166004	395166104	395166204	395166504	395166604	395166704	25.63	1.009	11.43	.450	20.43	.804
3.81MM, EURO HEADER, RIGHT ANGLE, MOUNTING ENDS	5	395161005	395161105	395161205	395161505	395161605	395161705	395166005	395166105	395166205	395166505	395166605	395166705	29.44	1.159	15.24	.600	24.24	.954
3.81MM, EURO HEADER, RIGHT ANGLE, MOUNTING ENDS	6	395161006	395161106	395161206	395161506	395161606	395161706	395166006	395166106	395166206	395166506	395166606	395166706	33.25	1.309	19.05	.750	28.05	1.104
3.81MM, EURO HEADER, RIGHT ANGLE, MOUNTING ENDS	7	395161007	395161107	395161207	395161507	395161607	395161707	395166007	395166107	395166207	395166507	395166607	395166707	37.06	1.459	22.86	.900	31.86	1.254
3.81MM, EURO HEADER, RIGHT ANGLE, MOUNTING ENDS	8	395161008	395161108	395161208	395161508	395161608	395161708	395166008	395166108	395166208	395166508	395166608	395166708	40.87	1.609	26.67	1.050	35.67	1.404
3.81MM, EURO HEADER, RIGHT ANGLE, MOUNTING ENDS	9	395161009	395161109	395161209	395161509	395161609	395161709	395166009	395166109	395166209	395166509	395166609	395166709	44.68	1.759	30.48	1.200	39.48	1.554
3.81MM, EURO HEADER, RIGHT ANGLE, MOUNTING ENDS	10	395161010	395161110	395161210	395161510	395161610	395161710	395166010	395166110	395166210	395166510	395166610	395166710	48.49	1.909	34.29	1.350	43.29	1.704
3.81MM, EURO HEADER, RIGHT ANGLE, MOUNTING ENDS	11	395161011	395161111	395161211	395161511	395161611	395161711	395166011	395166111	395166211	395166511	395166611	395166711	52.30	2.059	38.10	1.500	47.10	1.854
3.81MM, EURO HEADER, RIGHT ANGLE, MOUNTING ENDS	12	395161012	395161112	395161212	395161512	395161612	395161712	395166012	395166112	395166212	395166512	395166612	395166712	56.11	2.209	41.91	1.650	50.91	2.004
3.81MM, EURO HEADER, RIGHT ANGLE, MOUNTING ENDS	13	395161013	395161113	395161213	395161513	395161613	395161713	395166013	395166113	395166213	395166513	395166613	395166713	59.92	2.359	45.72	1.800	54.72	2.154
3.81MM, EURO HEADER, RIGHT ANGLE, MOUNTING ENDS	14	395161014	395161114	395161214	395161514	395161614	395161714	395166014	395166114	395166214	395166514	395166614	395166714	63.73	2.509	49.53	1.950	58.53	2.304
3.81MM, EURO HEADER, RIGHT ANGLE, MOUNTING ENDS	15	395161015	395161115	395161215	395161515	395161615	395161715	395166015	395166115	395166215	395166515	395166615	395166715	67.54	2.659	53.34	2.100	62.34	2.454
3.81MM, EURO HEADER, RIGHT ANGLE, MOUNTING ENDS	16	395161016	395161116	395161216	395161516	395161616	395161716	395166016	395166116	395166216	395166516	395166616	395166716	71.35	2.809	57.15	2.250	66.15	2.604
3.81MM, EURO HEADER, RIGHT ANGLE, MOUNTING ENDS	17	395161017	395161117	395161217	395161517	395161617	395161717	395166017	395166117	395166217	395166517	395166617	395166717	75.16	2.959	60.96	2.400	69.96	2.754
3.81MM, EURO HEADER, RIGHT ANGLE, MOUNTING ENDS	18	395161018	395161118	395161218	395161518	395161618	395161718	395166018	395166118	395166218	395166518	395166618	395166718	78.97	3.109	64.77	2.550	73.77	2.904
3.81MM, EURO HEADER, RIGHT ANGLE, MOUNTING ENDS	19	395161019	395161119	395161219	395161519	395161619	395161719	395166019	395166119	395166219	395166519	395166619	395166719	82.78	3.259	68.58	2.700	77.58	3.054
3.81MM, EURO HEADER, RIGHT ANGLE, MOUNTING ENDS	20	395161020	395161120	395161220	395161520	395161620	395161720	395166020	395166120	395166220	395166520	395166620	395166720	86.59	3.409	72.39	2.850	81.39	3.204

NOTE: SEE SHEET 3 FOR 10A AND 11A IMPRINTING DETAIL

TOLERANCES			
MM	TOL	INCH	TOL
0-6	±0.25	0-.24	±.010
>6-30	±0.40	.24-1.18	±.016
>30-120	±0.50	1.18-4.76	±.020
>120	±0.80	>4.76	±.031

FUNCTIONAL SYMBOLS
EA = 0
EC = 0
EP = 0
DIVISIONAL SYMBOLS

THIS DRAWING CONTAINS INFORMATION THAT IS PROPRIETARY TO MOLEX ELECTRONIC TECHNOLOGIES, LLC AND SHOULD NOT BE USED WITHOUT WRITTEN PERMISSION

DIMENSION UNITS: MM/INCH
SCALE: 2:1

GENERAL TOLERANCES (UNLESS SPECIFIED)

	MM	INCH
4 PLACES	± ---	± ---
3 PLACES	± ---	± SEE CHART
2 PLACES	± SEE CHART	± SEE CHART
1 PLACE	± SEE CHART	± ---
0 PLACES	± ---	± ---
ANGULAR TOL	± ---	

DRAFT WHERE APPLICABLE MUST REMAIN WITHIN DIMENSIONS

CURRENT REV DESC: MODIFIED VIEWS. ADDED AIR SLOT IN SOLDER AREA. UPDATED LATEST MOLEX TEMPLATE

EC NO: 796889
DRWN: ABENJAMINLW 2024/08/28
CHK'D: DACHAMMER 2024/08/30
APPR: JFMURPHY 2024/08/30

INITIAL REVISION:
DRWN: LROTHAUS 2006/01/09
APPR: JPAWLICK 2006/01/10

THIRD ANGLE PROJECTION
DRAWING: B-SIZE
SERIES: 39516

molex

3.81MM, EURO HEADER
RIGHT ANGLE, MOUNTING

PRODUCT CUSTOMER DRAWING

DOCUMENT NUMBER	DOC TYPE	DOC PART	REVISION
SD-39516-001	PSD	001	E

MATERIAL NUMBER	CUSTOMER	SHEET NUMBER
SEE CHART	GENERAL MARKET	2 OF 3

DOCUMENT STATUS	P1	RELEASE DATE	2024/08/30 17:00:55

FORMAT: Eng-lega-master-tb-prod-B
REVISION: E1
DATE: 2021/05/01

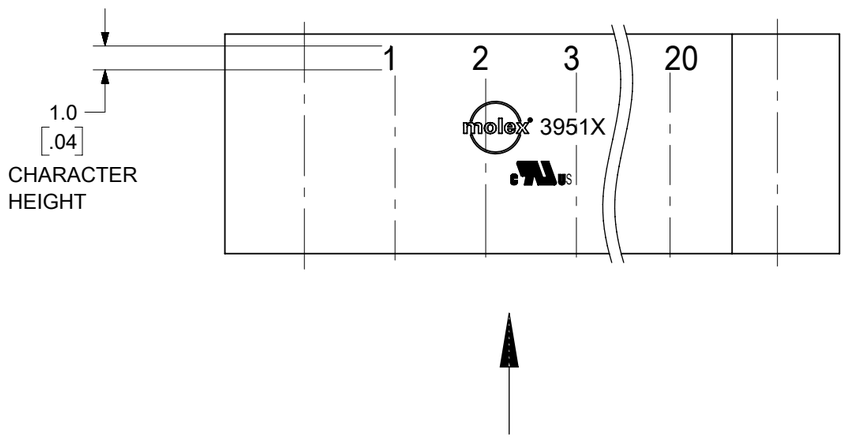

10A IMPRINTING
(HORIZONTAL HEADER)

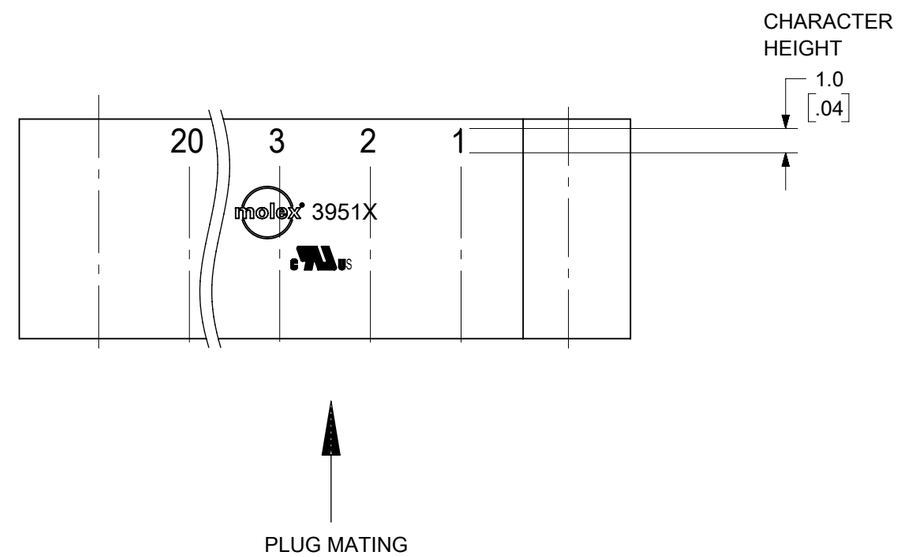

11A IMPRINTING
(HORIZONTAL HEADER)

TOLERANCES			
MM	TOL	INCH	TOL
0-6	±0.25	0-.24	±.010
>6-30	±0.40	.24-1.18	±.016
>30-120	±0.50	1.18-4.76	±.020
>120	±0.80	>4.76	±.031

FUNCTIONAL SYMBOLS
E/A = 0
E/C = 0
E/P = 0
DIVISIONAL SYMBOLS

THIS DRAWING CONTAINS INFORMATION THAT IS PROPRIETARY TO MOLEX ELECTRONIC TECHNOLOGIES, LLC AND SHOULD NOT BE USED WITHOUT WRITTEN PERMISSION

DIMENSION UNITS: MM/INCH
SCALE: 4:1

GENERAL TOLERANCES (UNLESS SPECIFIED)

	MM	INCH
4 PLACES	± ---	± ---
3 PLACES	± ---	± SEE CHART
2 PLACES	± SEE CHART	± SEE CHART
1 PLACE	± SEE CHART	± ---
0 PLACES	± ---	± ---
ANGULAR TOL	± ---	

DRAFT WHERE APPLICABLE MUST REMAIN WITHIN DIMENSIONS

CURRENT REV DESC: MODIFIED VIEWS. ADDED AIR SLOT IN SOLDER AREA. UPDATED LATEST MOLEX TEMPLATE

EC NO: 796889
DRWN: ABENJAMINLW 2024/08/28
CHK'D: DACHAMMER 2024/08/30
APPR: JFMURPHY 2024/08/30

INITIAL REVISION:
DRWN: LROTHAUS 2006/01/09
APPR: JPAWLICK 2006/01/10

THIRD ANGLE PROJECTION
DRAWING: B-SIZE
SERIES: 39516

molex

3.81MM, EURO HEADER
RIGHT ANGLE, MOUNTING

PRODUCT CUSTOMER DRAWING

DOCUMENT NUMBER	DOC TYPE	DOC PART	REVISION
SD-39516-001	PSD	001	E

MATERIAL NUMBER	CUSTOMER	SHEET NUMBER
SEE SHEET 2	GENERAL MARKET	3 OF 3

DOCUMENT STATUS	P1	RELEASE DATE	2024/08/30 17:00:55

FORMAT: Eng-lega-master-tb-prod-B
REVISION: E1
DATE: 2021/05/01