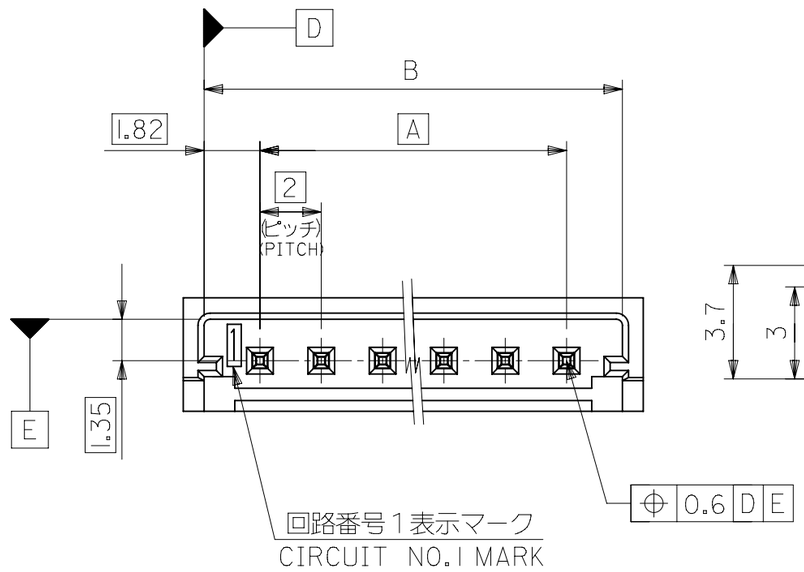

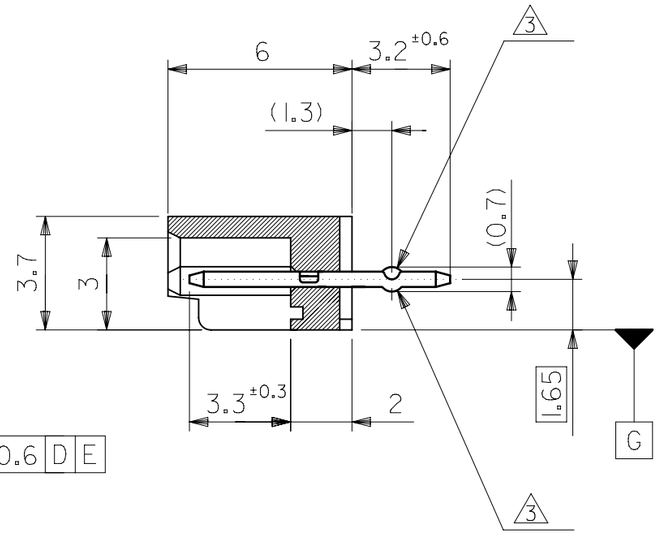

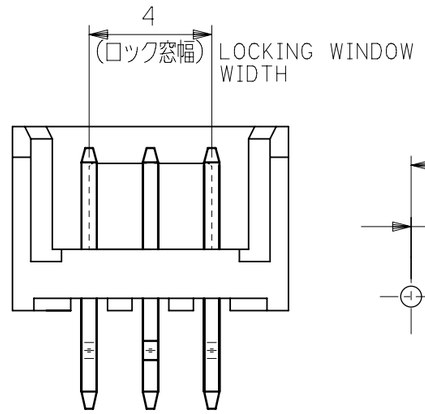

3極の場合
IN CASE OF
3 CIRCUIT WAFER

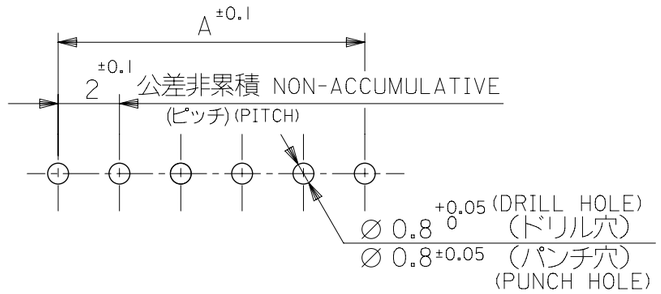

基板取付穴参考寸法
RECOMMENDED P.C.BOARD
HOLE DIM.(REFERENCE)

(t=1.6)

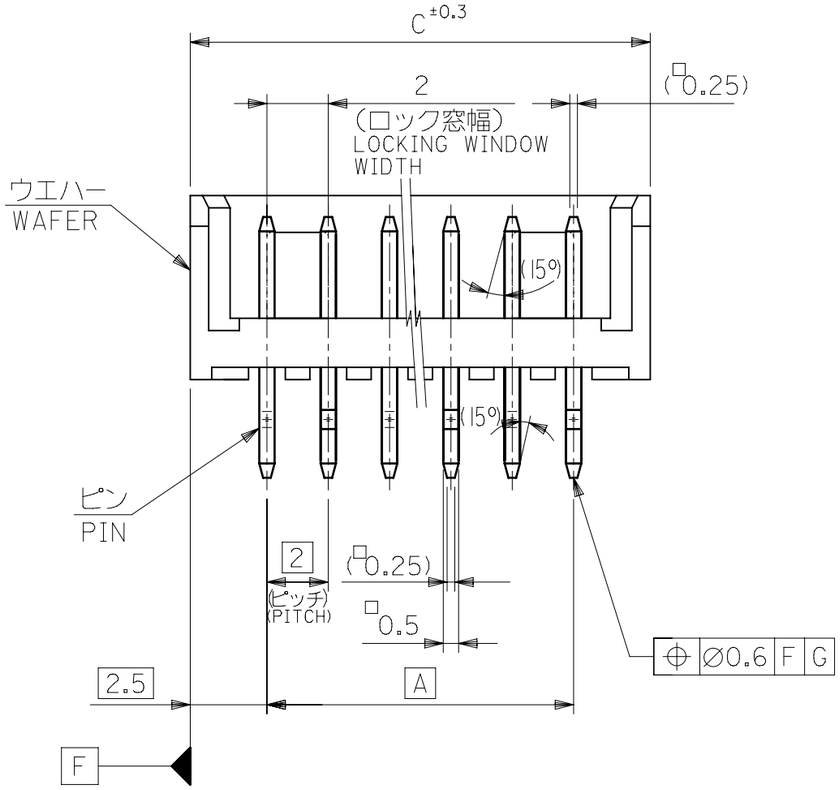

注記 NOTES

1. 材料 MATERIAL
   ウエハー WAFER: PBT (ガラス 15% 入り) G.F. 15%
   UL94V-0
   ピン PIN: 黄銅，錫メッキ / BRASS, TIN
2. 嵌合相手 : 52418 シリ - ズ
   MATE WITH : 52418 SERIES
3. キンクは全ピンに交互に付加。
   SET KINK ALTERNATELY TO ALL PIN.
4. 各部のソリは 0.2MAX.
   CAMBER : 0.2MAX.
5. 本製品は、53290-**10 の鉛フリー品である。
   THIS PRODUCT IS LEAD FREE OF 53290-**10.
6. 梱包仕様PACKAGING
   53290-**8* トレー TRAY
   53290-**4* ポリ袋 POLYBAG

GENERAL TOLERANCES (UNLESS SPECIFIED)	
10^{UNDER}	±0.2
$10^{OVER}30^{UNDER}$	±0.25
30^{OVER}	±0.3
ANGULAR	±3°

THIS DRAWING CONTAINS INFORMATION THAT IS PROPRIETARY TO MOLEX ELECTRONIC TECHNOLOGIES, LLC AND SHOULD NOT BE USED WITHOUT WRITTEN PERMISSION

DIMENSION UNITS	SCALE
mm	NTS

GENERAL TOLERANCES (UNLESS SPECIFIED)		
ANGULAR TOL	±	3.0°
4 PLACES	±	0.2
3 PLACES	±	0.25
2 PLACES	±	0.3
1 PLACE	±	
0 PLACES	±	

DRAFT WHERE APPLICABLE MUST REMAIN WITHIN DIMENSIONS

CURRENT REV DESC: REMOVED OBSOLETED PART NUMBER AS PER PCN#515981

EC NO: 837779
DRWN: PONNAM 2025/10/20
CHK'D: GGA 2025/10/28
APPR: GGA 2025/10/28

INITIAL REVISION:
DRWN: JSASAMOR 2004/09/14
APPR: NUKITA 2004/09/24

THIRD ANGLE PROJECTION | DRAWING: A3-SIZE | SERIES: 53290

molex

2.0 BOARD TO BOARD CONN.
WAFER ASS'Y -LEAD FREE-

PRODUCT CUSTOMER DRAWING

DOCUMENT NUMBER	DOC TYPE	DOC PART	REVISION
SD-53290-004	PSD	001	B5

MATERIAL NUMBER	CUSTOMER	SHEET NUMBER
SEE TABLE	GENERAL MARKET	1 OF 2

DOCUMENT STATUS	P1	RELEASE DATE	2025/10/28 11:08:39

FORMAT: master-tb-prod-A3
REVISION: J1
DATE: 2021/05/01

31	29.64	26	−1480	14
27	25.64	22	−1280	12
25	23.64	20	−1180	11
23	21.64	18	−1080	10
19	17.64	14	−0880	8
17	15.64	12	−0780	7
11	9.64	6	−0480	4
9	7.64	4	53290 −0380	3
C	B	A	MATERIAL NO. COLOR : NATURAL(WHITE) 色 : ナチュラル (白)	極数 CKT.

GENERAL TOLERANCES (UNLESS SPECIFIED)	
10^{UNDER}	±0.2
$10^{OVER}30^{UNDER}$	±0.25
30^{OVER}	±0.3
ANGULAR	±3°

THIS DRAWING CONTAINS INFORMATION THAT IS PROPRIETARY TO MOLEX ELECTRONIC TECHNOLOGIES, LLC AND SHOULD NOT BE USED WITHOUT WRITTEN PERMISSION

DIMENSION UNITS	SCALE
mm	NTS

GENERAL TOLERANCES (UNLESS SPECIFIED)		
ANGULAR TOL	±	3.0 °
4 PLACES	±	0.2
3 PLACES	±	0.25
2 PLACES	±	0.3
1 PLACE	±	
0 PLACES	±	

DRAFT WHERE APPLICABLE MUST REMAIN WITHIN DIMENSIONS

CURRENT REV DESC: REMOVED OBSOLETED PART NUMBER AS PER PCN#515981

EC NO: 837779
DRWN: PONNAM 2025/10/20
CHK'D: GGA 2025/10/28
APPR: GGA 2025/10/28

INITIAL REVISION:
DRWN: JSASAMOR 2004/09/14
APPR: NUKITA 2004/09/24

THIRD ANGLE PROJECTION | DRAWING: A3-SIZE | SERIES: 53290

molex

2.0 BOARD TO BOARD CONN.
WAFER ASS'Y -LEAD FREE-

PRODUCT CUSTOMER DRAWING

DOCUMENT NUMBER	DOC TYPE	DOC PART	REVISION
SD-53290-004	PSD	001	B5

MATERIAL NUMBER	CUSTOMER	SHEET NUMBER
SEE TABLE	GENERAL MARKET	2 OF 2

DOCUMENT STATUS	P1	RELEASE DATE	2025/10/28 11:08:39

FORMAT: master-tb-prod-A3
REVISION: J1
DATE: 2021/05/01