ORDER NO.	WOODHEAD NO.	COLOR	BODY SIZE	CORD GRIP	CABLE RANGE	DIM "X" REF	DIM "Y" REF
1301550195	14WBOOT	YELLOW	F2	1/2"	0.375 - 0.625	1.70	1.30
1301550196	14WBOOT-BLK	BLACK	F2	1/2"	0.375 - 0.625	1.70	1.30
1301550210	26WBOOT	YELLOW	F3	3/4"	0.437 - 0.812	2.12	1.50
1301550211	26WBOOT-BLK	BLACK	F3	3/4"	0.437 - 0.812	2.12	1.50
1301550212	28WBOOT	YELLOW	F4	1"	0.562 - 0.937	2.32	1.90
1301550213	28WBOOT-BLK	BLACK	F4	1"	0.562 - 0.937	2.32	1.90

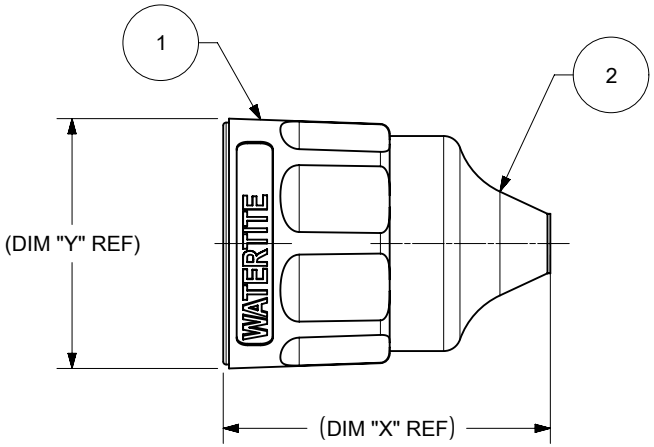

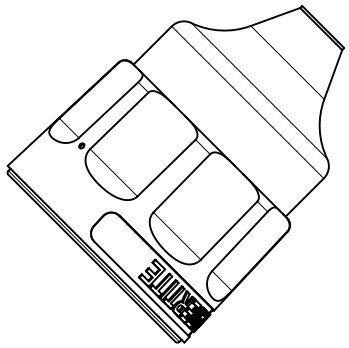

ITEM NO.	DESCRIPTIONS	MATERIAL	QTY.
1	COMPRESSION NUT	NYLON	1
2	CABLE GLOVE	SILICONE	1

DOCUMENT STATUS	P1	RELEASE DATE	2021/02/04 00:24:24

FORMAT: master-tb-prod-A
REVISION: J
DATE: 2020/01/14

FUNCTIONAL SYMBOLS: FA = 0, FC = 0, FP = 0

DIVISIONAL SYMBOLS

THIS DRAWING CONTAINS INFORMATION THAT IS PROPRIETARY TO MOLEX ELECTRONIC TECHNOLOGIES, LLC AND SHOULD NOT BE USED WITHOUT WRITTEN PERMISSION

DIMENSION UNITS	SCALE
INCH	NTS

GENERAL TOLERANCES (UNLESS SPECIFIED)

ANGULAR TOL	± °
4 PLACES	±
3 PLACES	±
2 PLACES	±
1 PLACE	±
0 PLACES	±

DRAFT WHERE APPLICABLE MUST REMAIN WITHIN DIMENSIONS

CURRENT REV DESC: RELEASED

EC NO: 653868
DRWN: DNGUYEN62 2021/01/26
CHK'D: WLEUNG 2021/01/28
APPR: HKNEELAND 2021/02/04

INITIAL REVISION:
DRWN: DNGUYEN62 2021/01/26
APPR: HKNEELAND 2021/02/04

THIRD ANGLE PROJECTION | DRAWING: A-SIZE | SERIES: 130155

molex

COMPRESSION NUT & CABLE GLOVE

PRODUCT CUSTOMER DRAWING

DOCUMENT NUMBER	DOC TYPE	DOC PART	REVISION
1301550195	PSD	000	A

MATERIAL NUMBER	CUSTOMER	SHEET NUMBER
SEE TABLE		1 OF 1