TABLE OF CONTENTS

SHEET NO.	SHEET DESCRIPTION
1	NOTES
2	CONFIGURATIONS
3	KEY CONFIGURATIONS
4	BLADE CONNECTOR ASSEMBLY
5	SYSTEM PACKAGING
6	12W STANDARD HYBRID CONNECTOR BOM

NOTES: VALID UNLESS OTHERWISE SPECIFIED

1. GENERAL:
   1.1 APPLICATION SPECIFICATION SEE: 1601110001-AS
   - CONTAINS: PRODUCT INTRODUCTION, PRODUCT SUMMARY, CONNECTOR ASSEMBLY, PACKAGING INFORMATION, CONNECTOR MATING, SERVICE INSTRUCTIONS, ELECTRICAL CONTINUITY CHECKING, CRIMPING, AND TROUBLE SHOOTING.
   - DESIGNED TO MATE WITH DEVICE OR CONNECTOR AS SPECIFIED IN THE MATING INTERFACE/CONNECTOR DRAWINGS CHART.
     *DENOTES DRAWINGS THAT CAN BE ACCESSED AT [http://ewcap.uscarteams.org/]
   - CLIPSLOT DESIGN IS BASED ON USCAR/EWCAP 11MM CLIP SLOT EWCAP-005-11 AND WILL ACCEPT CLIPS DESIGNED TO THAT INTERFACE
   - ASSEMBLY SHIPPED WITH THE FOLLOWING PARTS IN PRE-LOCK POSITION (PLR, CPA, ISL, LEVEL. SEE PRE-LOCK VIEW ON SHEET X).

   1.2 PRODUCT SPECIFICATION SEE: 1601110001-PS
   - CONTAINS: SCOPE, PRODUCT DESCRIPTION, INTEGRAL COMPONENTS AND ACCESSORIES, APPLICABLE DOCUMENTS AND SPECIFICATIONS, RATINGS, PERFORMANCE, PACKAGING, GAUGES AND FIXTURES, AND OTHER INFORMATION.

   1.3 PACKAGING SPECIFICATION PER MOLEX DRAWING: SEE TABLE
   1.4 PARTS MUST BE IN COMPLIANCE TO MOLEX CHEMICAL SUBSTANCES FOR PRODUCTS AND PACKAGING SPECIFICATION: QEHS-699000-300
   1.5 DATA MUST BE SUBMITTED UNDER THE MOLEX PART NUMBER TO IMDS (COMPANY ID#13255)

2. DESIGN - MATERIALS:
   2.1 SEE BOM TABLE

3. DESIGN - GEOMETRY:
   3.1 THE 3-D CAD DATA IS BASIC (WITHOUT TOLERANCE) AND MUST BE TAKEN FROM THE DATA FILE AT ITS LATEST REVISION.
   3.2 THE 3-D CAD DATA IS MASTER FOR THIS PART AND IS TO BE USED TO ESTABLISH DIMENSIONAL INFORMATION NOT SHOWN ON THIS DRAWING. ANY DIMENSIONS UNDERLINED INDICATE A CONFLICT WITH THE MODEL.
   3.3 PRODUCT DESIGN MODEL NUMBER(S): SEE BOM TABLE
   3.4 GEOMETRIC DIMENSIONS AND TOLERANCES PER ASME Y14.5M-2009
   3.5 EDGES OF UNDEFINED SHAPE PER ISO 13715
   3.6 CORNERS SHOWN AS SHARP TO BE R 0.2 MAX
   3.7 LETTERING SHALL BE 0.15 MAX RAISED IN 0.25 MAX RECESS PAD. THIS INCLUDES RECYCLING CODE, CAVITY ID, VENDOR IDENTIFICATION, AND CUSTOMER MATERIAL NUMBER.
   3.8 VISUAL DEFECTS SHALL MEET COSMETIC STANDARD PS-45499-002 (CLASS B).
   3.7 LASER MARKING
      1. PART NUMBER
      2. DAY OF THE YEAR
      3. SHIFT
      4. YEAR
      FOR ADDTIONAL INFORMATION SEE SECTION 5 UNDER PROCEDURES IN ES-34735-008.

DESCRIPTION	PACKAGING DRAWING NO.	MATING INTERFACE/CONNECTOR DRAWINGS	
		INTERFACE DEFINITION	MOLEX INLINE
12W STANDARD HYBRID	RPK-1601129000	PSD-1601110000	PSD-1601110000

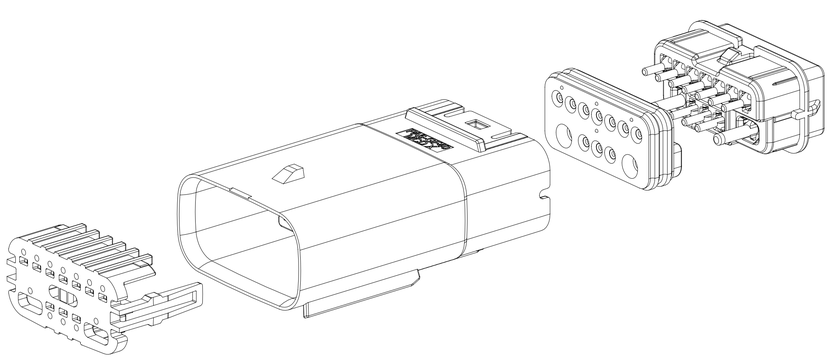

12W STANDARD HYBRID

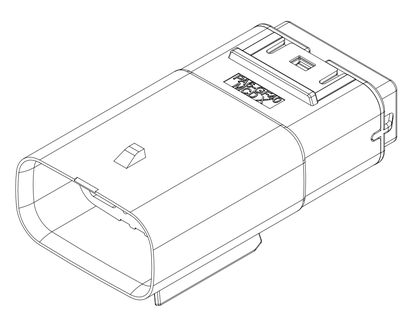

12W HYBRID

F3	ADDED NEW PN 160112-6055
F2	DIM 6 ADDED & CLIPSLOT NOTE ADDED
F1	ADDED NEW PN 160112-6054
F	REMOVED MXDaSH PRODUCTS. REFERENCE 3000920000 PSD FOR ALL MXDaSH BLADE INFORMATION.
E11	UPDATED PN SATUS FOR 300092-0001 & 300092-0005 FROM OKAY TO TOOL TO SALEABLE 10+2 PN'S 300092-0009 to 300092-0015 ADDED
E9	ADDED PN FOR 300159-0014. UPDATED MISSING PN FROM 1601120000/E9 PDD. UPDATED PN FOR E8 REV TO 300159-0016 & E9 REV TO 300159-0017
E8	ADDED PART NUMBER FOR 300159-0013
E7	ADDED NEW PN 160112-6053
E6	10+1+1 PN'S 300159-0013,300159-0014, & 300159-0015 REMOVED
E5	MINIMUM PASS THROUGH UPDATED 10+1+1 KEY A COMPONENT'S STATUS UPDATED TO SALEABLE
E4	MSDaSH 10+2 & 10+1+1 MATERIAL UPDATED FROM PA6-GF40 TO PA66-GF35 10+1+1 KEY A COMPONENT'S STATUS UPDATED TO SALEABLE FOR INTERIM PPAP 300159-0013 UPDATED FROM OKAY TO TOOL TO OBSOLUTE 10+1+1 PN'S 300159-0014 AND 300159-0015 ADDED
E3	ADD NEW PN 160112-6051 AND 160112-6052 UPDATED 10+1+1/10+2 HOUSING MATERIAL TO PA66 GF35
E2	ADD NEW PN 160112-6049 AND 160112-6050
E1	ADD NEW PN 160112-6048, 300159-0013
E	ADDED BOM FOR SERIES 300092 & 300159
D7	ADD NEW PN 160112-6047
D6	ADD NEW PN 160112-6046
D5	ADD NEW PN 160112-6045
D4	ADD NEW PN 160112-6044
D3	ADD NEW PN 160112-6043
D2	ADD NEW PN 160112-6042
D1	ADD NEW PN 160112-6041
D	ADD NEW PN 160112-6039 AND 160112-6040
C2	UPDATED NOTES
C1	CHANGE DOCUMENT TYPE FROM RSD TO SD
C	ADD NEW PN 160112-6030 THRU 6038
B	UPDATED INFORMATION TO PRODUCTION LEVEL
A2	ADDED NEW PN. 160112-6023 160112-6024 160112-6025 160112-6026 160112-6027 160112-6028 160112-6029
A1	ADDED NEW PN. 160112-6022
A	INITIAL RELEASE
REV	REV DESCRIPTION

INSPECTION NUMBER LOG

LAST NUMBER: 5

THIS DRAWING CONTAINS INFORMATION THAT IS PROPRIETARY TO MOLEX ELECTRONIC TECHNOLOGIES, LLC AND SHOULD NOT BE USED WITHOUT WRITTEN PERMISSION

FUNCTIONAL SYMBOLS: FA = 0, FC = 0, FP = 0

DIVISIONAL SYMBOLS

DIMENSION UNITS	SCALE
mm	2:1

GENERAL TOLERANCES (UNLESS SPECIFIED)

ANGULAR TOL	± 0.5°
4 PLACES	±
3 PLACES	
2 PLACES	±
1 PLACE	±
0 PLACES	±

DRAFT WHERE APPLICABLE MUST REMAIN WITHIN DIMENSIONS

SEE NOTES

CURRENT REV DESC: SEE REVISION TABLE

STATUS: Production
DRWN: Srikanth CV 2025-05-26
CHK'D: Chaitra D 2025-05-29
APPR: Gurunandan GA 2025-05-29

THIRD ANGLE PROJECTION | DRAWING: D-SIZE | SERIES: 160112

molex

MX150 HYBRID MAT SEAL BLD CONN ASM SALES

PRODUCT CUSTOMER DRAWING

DOCUMENT NUMBER	DOC TYPE	DOC PART	REVISION
1601120000	PSD	000	F3

MATERIAL NUMBER	CUSTOMER	SHEET NUMBER
SEE TABLE		1 OF 6

SHEET DESCRIPTION
CONFIGURATIONS

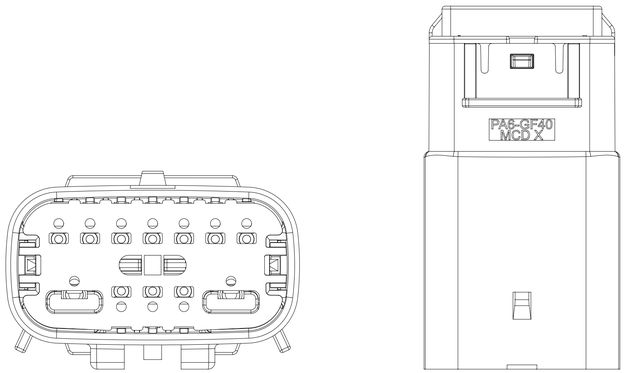

12W HYBRID

CONT.

THIS DRAWING CONTAINS INFORMATION THAT IS PROPRIETARY TO MOLEX ELECTRONIC TECHNOLOGIES, LLC AND SHOULD NOT BE USED WITHOUT WRITTEN PERMISSION

FUNCTIONAL SYMBOLS: FA = 0, FC = 0, FD = 0

DIVISIONAL SYMBOLS

DIMENSION UNITS	SCALE
mm	2:1

GENERAL TOLERANCES (UNLESS SPECIFIED)

ANGULAR TOL	±	0.5°
4 PLACES	±	
3 PLACES	±	
2 PLACES	±	
1 PLACES	±	
0 PLACES	±	

DRAFT WHERE APPLICABLE MUST REMAIN WITHIN DIMENSIONS

SEE NOTES

CURRENT REV DESC: SEE REVISION TABLE

STATUS:	Production	
DRWN:	Srikanth CV	2025-05-26
CHK'D:	Chaitra D	2025-05-29
APPR:	Gurunandan GA	2025-05-29

THIRD ANGLE PROJECTION

DRAWING	SERIES
D-SIZE	160112

molex

MX150 HYBRID MAT SEAL BLD CONN ASM SALES

PRODUCT CUSTOMER DRAWING

DOCUMENT NUMBER	DOC TYPE	DOC PART	REVISION
1601120000	PSD	000	F3

MATERIAL NUMBER	CUSTOMER	SHEET NUMBER
SEE TABLE		2 OF 6

SHEET DESCRIPTION
KEY CONFIGURATIONS

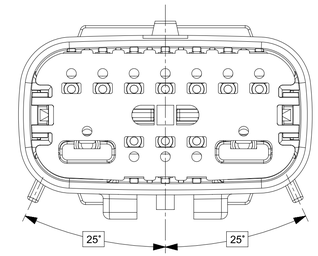

KEY A

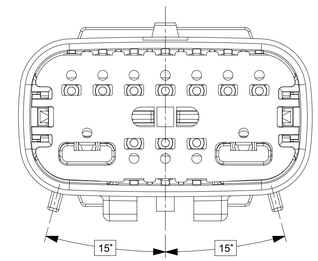

KEY B

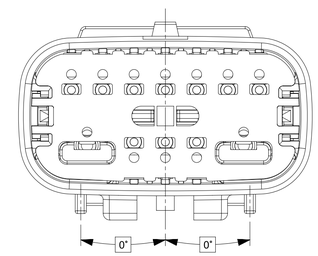

KEY C

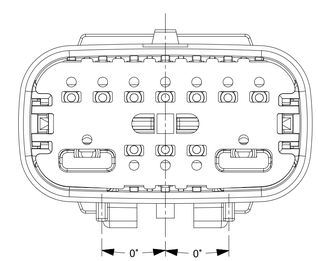

KEY D

FUNCTIONAL SYMBOLS	THIS DRAWING CONTAINS INFORMATION THAT IS PROPRIETARY TO MOLEX ELECTRONIC TECHNOLOGIES, LLC AND SHOULD NOT BE USED WITHOUT WRITTEN PERMISSION			
= 0	DIMENSION UNITS: mm	SCALE: 3:1	CURRENT REV DESC: SEE REVISION TABLE	molex
= 0	GENERAL TOLERANCES (UNLESS SPECIFIED)			MX150 HYBRID MAT SEAL BLD CONN ASM SALES
= 0	ANGULAR TOL ± 0.5°			
	4 PLACES ±			
DIVISIONAL SYMBOLS	3 PLACES ±			PRODUCT CUSTOMER DRAWING
	2 PLACES ±		STATUS: Production	
	1 PLACE ±		DRWN: Srikanth CV 2025-05-26	DOCUMENT NUMBER: 1601120000 / DOC TYPE: PSD / DOC PART: 000 / REVISION: F3
	0 PLACES ±		CHK'D: Chaitra D 2025-05-29	
	DRAFT WHERE APPLICABLE MUST REMAIN WITHIN DIMENSIONS		APPR: Gurunandan GA 2025-05-29	
		THIRD ANGLE PROJECTION	DRAWING: D-SIZE / SERIES: 160112	MATERIAL NUMBER: SEE TABLE / CUSTOMER: / SHEET NUMBER: 3 OF 6

SEE NOTES

SHEET DESCRIPTION

BLADE CONNECTOR ASSEMBLY

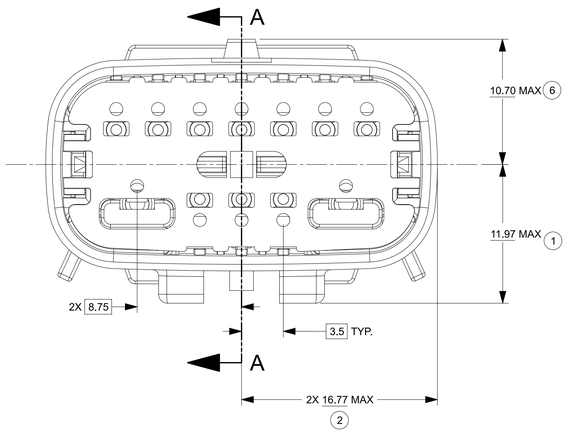

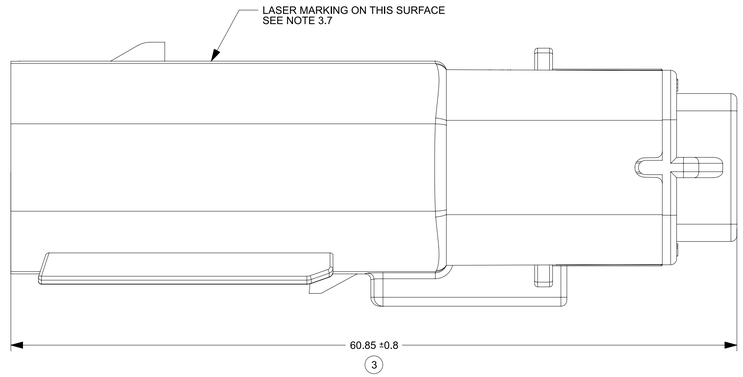

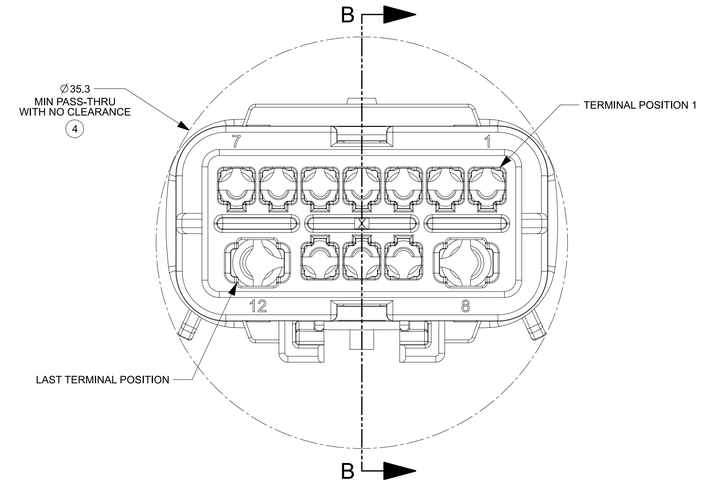

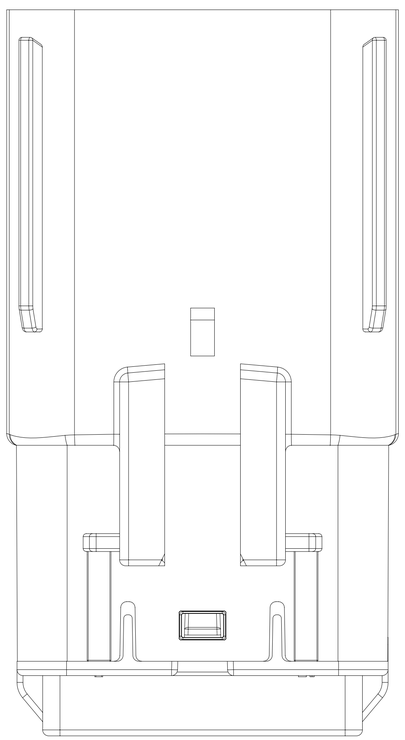

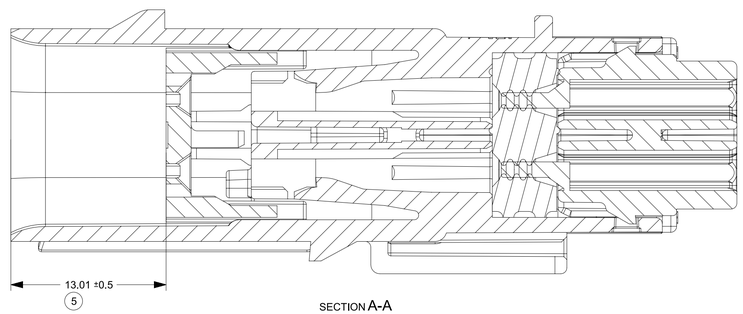

SECTION A-A

PRIMARY LOCK REINFORCER (PLR) SHOWN
IN PRE-STAGE POSITION

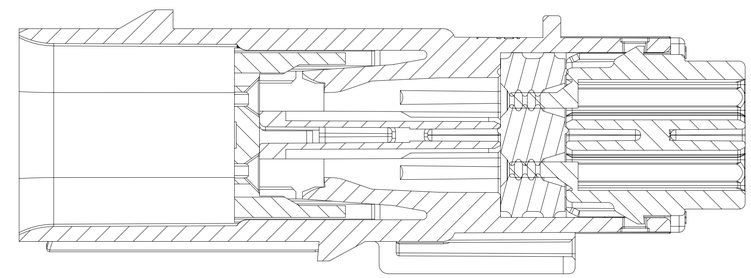

SECTION B-B

PRIMARY LOCK REINFORCER (PLR) SHOWN
IN FINAL-STAGE POSITION

FUNCTIONAL SYMBOLS	THIS DRAWING CONTAINS INFORMATION THAT IS PROPRIETARY TO MOLEX ELECTRONIC TECHNOLOGIES, LLC AND SHOULD NOT BE USED WITHOUT WRITTEN PERMISSION		
= 0	DIMENSION UNITS: mm	SCALE: 4:1	CURRENT REV DESC: SEE REVISION TABLE
= 0	GENERAL TOLERANCES (UNLESS SPECIFIED)		
= 0	ANGULAR TOL ± 0.5°		
	4 PLACES ±		
DIVISIONAL SYMBOLS	3 PLACES		
	2 PLACES ±		STATUS: Production
	1 PLACE ±		DRWN: Srikanth CV 2025-05-26
	0 PLACES ±		CHK'D: Chaitra D 2025-05-29
	DRAFT WHERE APPLICABLE MUST REMAIN WITHIN DIMENSIONS		APPR: Gurunandan GA 2025-05-29

SEE NOTES

THIRD ANGLE PROJECTION	DRAWING	SERIES	MATERIAL NUMBER	CUSTOMER	SHEET NUMBER
	D-SIZE	160112	SEE TABLE		4 OF 6

molex

MX150 HYBRID MAT SEAL BLD CONN ASM SALES

PRODUCT CUSTOMER DRAWING

DOCUMENT NUMBER	DOC TYPE	DOC PART	REVISION
1601120000	PSD	000	F3

SHEET DESCRIPTION

SYSTEM PACKAGING

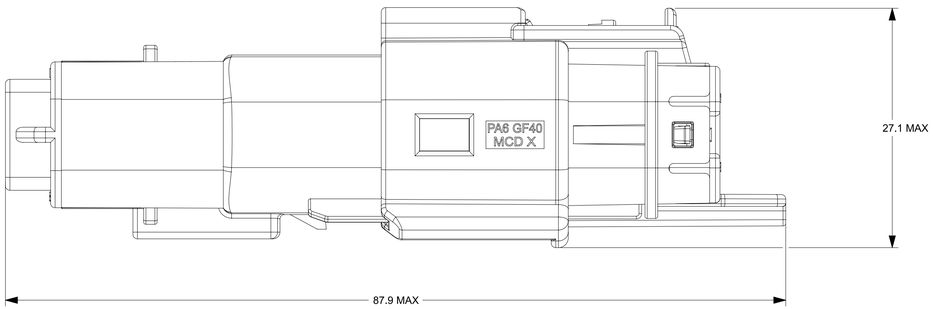

WITH EXTENDED CLIPSLOT RECEPTACLE HOUSING

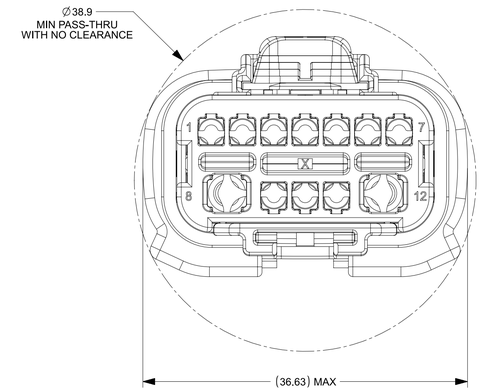

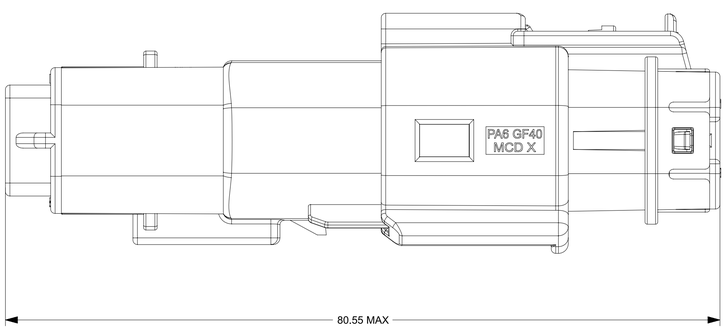

NON CLIPSLOT RECEPTACLE HOUSING

FUNCTIONAL SYMBOLS	THIS DRAWING CONTAINS INFORMATION THAT IS PROPRIETARY TO MOLEX ELECTRONIC TECHNOLOGIES, LLC AND SHOULD NOT BE USED WITHOUT WRITTEN PERMISSION		
FA = 0	DIMENSION UNITS: mm	SCALE: 3:1	CURRENT REV DESC: SEE REVISION TABLE
FC = 0	GENERAL TOLERANCES (UNLESS SPECIFIED)		
FD = 0	ANGULAR TOL ± 0.5°		
	4 PLACES ±		
DIVISIONAL SYMBOLS	3 PLACES		
	2 PLACES ±		STATUS: Production
	1 PLACE ±		DRWN: Srikanth CV 2025-05-26
	0 PLACES ±		CHK'D: Chaitra D 2025-05-29
	DRAFT WHERE APPLICABLE MUST REMAIN WITHIN DIMENSIONS		APPR: Gurunandan GA 2025-05-29

SEE NOTES

THIRD ANGLE PROJECTION	DRAWING	SERIES	MATERIAL NUMBER	CUSTOMER	SHEET NUMBER
	D-SIZE	160112	SEE TABLE		5 OF 6

molex

MX150 HYBRID MAT SEAL BLD CONN ASM SALES

PRODUCT CUSTOMER DRAWING

DOCUMENT NUMBER	DOC TYPE	DOC PART	REVISION
1601120000	PSD	000	F3

SHEET DESCRIPTION

12W HYBRID CONNECTOR BOM

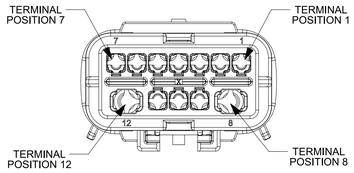

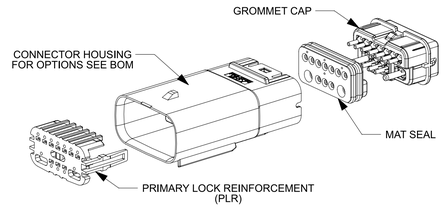

ABBREVIATION	DESCRIPTION	COLOR	MATERIAL
A-BLK	HOUSING KEYING OPTION A	BLACK	PA6 GF40
B-LG	HOUSING KEYING OPTION B	LIGHT GRAY	PA6 GF40
C-DG	HOUSING KEYING OPTION C	DARK GRAY	PA6 GF40
D-SG	HOUSING KEYING OPTION D	STONE GRAY	PA6 GF40
A-Y	HOUSING KEYING OPTION A	YELLOW	PA6 GF40
GCP	GROMMET CAP (PLUGGED)	BLACK	PA6 GF40
PLR	PLR	NATURAL	PA6 GF40
M	MAT SEAL 2.8/1.5	RUST RED	INHERENTLY LUBRICATED SILICONE

ASSEMBLY DESCRIPTION	ASSEMBLY PART NUMBER*	COMPONENT				BLOCKED TERMINALS												STATUS	COMMENTS	OPTIONAL ATTATCHMENTS SOLD SEPERATELY	
		THE PRESENCE OF AN ABBREVIATION INDICATES THE PRESENCE OF THAT COMPONENT.				CAVITY WITH A NUMBER INDICATES BLOCKED TERMINAL POSITION CAVITY WITHOUT A NUMBER INDICATES OPEN TERMINAL POSITION															
		HOUSING KEY/COLOR	GROMMET CAP	PLR	MAT SEAL	1	2	3	4	5	6	7	8	9	10	11	12			BACKSHELL WITH RIBS	BACKSHELL WITHOUT RIBS
KEY A, BLACK	160112-6001	A-BLK	GCP	PLR	M													SALEABLE			
KEY B, LIGHT GRAY	160112-6002	B-LG	GCP	PLR	M													SALEABLE			
KEY C, DARK GRAY	160112-6003	C-DG	GCP	PLR	M													SALEABLE			
KEY D, STONE GRAY	160112-6004	D-SG	GCP	PLR	M													SALEABLE			
KEY A, YELLOW	160112-6005	A-Y	GCP	PLR	M													OK TO TOOL			
KEY A, BLACK	160112-6006	A-BLK	GCP	PLR	M			3	4	5	6	7		9	10	11		SALEABLE			
KEY A, BLACK	160112-6007	A-BLK	GCP	PLR	M	1			4	5	6	7	8					SALEABLE			
KEY A, BLACK	160112-6008	A-BLK	GCP	PLR	M	1	2	3	4	5			8		10			SALEABLE			
KEY A, BLACK	160112-6009	A-BLK	GCP	PLR	M	1			4	5			8					SALEABLE			
KEY A, BLACK	160112-6010	A-BLK	GCP	PLR	M	1	2	3							10			SALEABLE			
KEY A, BLACK	160112-6011	A-BLK	GCP	PLR	M	1												SALEABLE			
KEY A, BLACK	160112-6012	A-BLK	GCP	PLR	M		2	3	4	5	6	7	8		10			SALEABLE			
KEY A, BLACK	160112-6013	A-BLK	GCP	PLR	M				4	5	6	7	8					SALEABLE			
KEY A, BLACK	160112-6014	A-BLK	GCP	PLR	M		2	3	4	5			8		10			SALEABLE			
KEY A, BLACK	160112-6015	A-BLK	GCP	PLR	M				4	5			8					SALEABLE			
KEY A, BLACK	160112-6016	A-BLK	GCP	PLR	M		2	3							10			SALEABLE			
KEY A, BLACK	160112-6017	A-BLK	GCP	PLR	M							7	8	9	10	11	12	SALEABLE			
KEY A, BLACK	160112-6018	A-BLK	GCP	PLR	M								8		10	11	12	SALEABLE			
KEY A, BLACK	160112-6019	A-BLK	GCP	PLR	M	1	2	3	4	5	6	7		9			12	SALEABLE			
KEY A, BLACK	160112-6020	A-BLK	GCP	PLR	M							7		9			12	SALEABLE			
KEY A, BLACK	160112-6021	A-BLK	GCP	PLR	M												12	SALEABLE			
KEY A, BLACK	160112-6022	A-BLK	GCP	PLR	M	1	2	3	4	5	6	7	8		10			SALEABLE			
KEY A, BLACK	160112-6023	A-BLK	GCP	PLR	M			3				7		9	10	11		SALEABLE			
KEY A, BLACK	160112-6024	A-BLK	GCP	PLR	M							7		9	10			SALEABLE			
KEY A, BLACK	160112-6025	A-BLK	GCP	PLR	M				4	5	6	7		9	10			SALEABLE			
KEY A, BLACK	160112-6026	A-BLK	GCP	PLR	M			3	4	5	6	7		9	10	11		SALEABLE			
KEY A, BLACK	160112-6027	A-BLK	GCP	PLR	M	1	2	3				7	8	9	10	11	12	SALEABLE			
KEY A, BLACK	160112-6028	A-BLK	GCP	PLR	M	1	2					7	8	9	10		12	SALEABLE			
KEY A, BLACK	160112-6029	A-BLK	GCP	PLR	M	1	2		4	5	6	7	8	9	10		12	SALEABLE			
KEY A, BLACK	160112-6030	A-BLK	GCP	PLR	M	1	2	3				7						SALEABLE			
KEY A, BLACK	160112-6031	A-BLK	GCP	PLR	M	1		3				7				11		SALEABLE			
KEY A, BLACK	160112-6032	A-BLK	GCP	PLR	M	1		3				7						SALEABLE			
KEY A, BLACK	160112-6033	A-BLK	GCP	PLR	M	1			4	5								SALEABLE			
KEY A, BLACK	160112-6034	A-BLK	GCP	PLR	M		2		4	5	6							SALEABLE			
KEY A, BLACK	160112-6035	A-BLK	GCP	PLR	M	1	2	3	4	5	6	7						SALEABLE			
KEY A, BLACK	160112-6036	A-BLK	GCP	PLR	M	1	2	3	4	5	6	7				11		SALEABLE			
KEY A, BLACK	160112-6037	A-BLK	GCP	PLR	M				4	5	6					11		SALEABLE			
KEY A, BLACK	160112-6038	A-BLK	GCP	PLR	M				4	5	6							SALEABLE			
KEY A, BLACK	160112-6039	A-BLK	GCP	PLR	M	1	2	3				7				11		SALEABLE			
KEY A, BLACK	160112-6040	A-BLK	GCP	PLR	M	1		3	4	5	6	7						SALEABLE			
KEY A, BLACK	160112-6041	A-BLK	GCP	PLR	M							7					12	SALEABLE			
KEY A, BLACK	160112-6042	A-BLK	GCP	PLR	M									9	10			SALEABLE			
KEY A, BLACK	160112-6043	A-BLK	GCP	PLR	M								8				12	SALEABLE			
KEY A, BLACK	160112-6044	A-BLK	GCP	PLR	M								8					SALEABLE			
KEY B, LIGHT GRAY	160112-6045	B-LG	GCP	PLR	M				4	5			8				12	SALEABLE			
KEY A, BLACK	160112-6046	A-BLK	GCP	PLR	M		2					7			10		12	SALEABLE			
KEY A, BLACK	160112-6047	A-BLK	GCP	PLR	M			3	4	5	6					11		SALEABLE			
KEY A, BLACK	160112-6048	A-BLK	GCP	PLR	M		2											SALEABLE			
KEY A, BLACK	160112-6049	A-BLK	GCP	PLR	M		2		4	5	6		8				12	SALEABLE			
KEY A, BLACK	160112-6050	A-BLK	GCP	PLR	M	1					6	7					12	SALEABLE			
KEY A, BLACK	160112-6051	A-BLK	GCP	PLR	M			3	4	5	6	7	8	9	10	11	12	SALEABLE			
KEY A, BLACK	160112-6052	A-BLK	GCP	PLR	M						6					11		SALEABLE			
KEY A, BLACK	160112-6053	A-BLK	GCP	PLR	M						6	7	8			11		SALEABLE			
KEY A, BLACK	160112-6054	A-BLK	GCP	PLR	M		2	3	4		6	7			10		12	SALEABLE			
KEY A, BLACK	160112-6055	A-BLK	GCP	PLR	M						6	7					12	SALEABLE			

THIS DRAWING CONTAINS INFORMATION THAT IS PROPRIETARY TO MOLEX ELECTRONIC TECHNOLOGIES, LLC AND SHOULD NOT BE USED WITHOUT WRITTEN PERMISSION

FUNCTIONAL SYMBOLS
FA = 0
FC = 0
FP = 0
DIVISIONAL SYMBOLS

DIMENSION UNITS	SCALE
mm	1:1

GENERAL TOLERANCES (UNLESS SPECIFIED)

ANGULAR TOL	± 0.5°
4 PLACES	±
3 PLACES	±
2 PLACES	±
1 PLACE	±
0 PLACES	±

SEE NOTES

DRAFT WHERE APPLICABLE MUST REMAIN WITHIN DIMENSIONS

CURRENT REV DESC: SEE REVISION TABLE

STATUS: Production
DRWN: Srikanth CV 2025-05-26
CHK'D: Chaitra D 2025-05-29
APPR: Gurunandan GA 2025-05-29

THIRD ANGLE PROJECTION | DRAWING: D-SIZE | SERIES: 160112

molex

MX150 HYBRID MAT SEAL BLD CONN ASM SALES

PRODUCT CUSTOMER DRAWING

DOCUMENT NUMBER	DOC TYPE	DOC PART	REVISION
1601120000	PSD	000	F3

MATERIAL NUMBER: SEE TABLE | CUSTOMER | SHEET NUMBER: 6 OF 6

FORMAT TO dwg/mm02
DATE: 2025/05/29
DATE: 2025/06/01