GENERAL TOLERANCE										USED ON
10 MAX	30 MAX	50 MAX	70 MAX	100 MAX	120 MAX	250 MAX	250 OVER	ANGLE	ECCENT	
±0.15	±0.20	±0.30	±0.40	±0.50	±0.75	±0.90	±1.4	±0.5°	0.1	

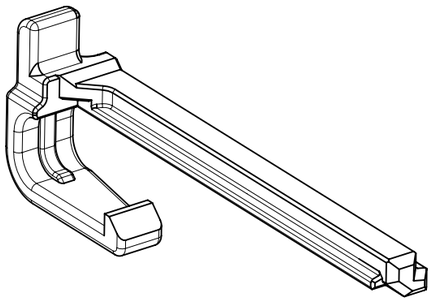

ISO VIEW

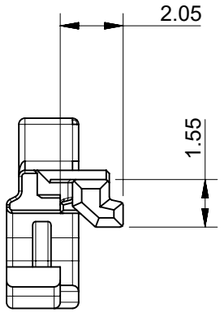

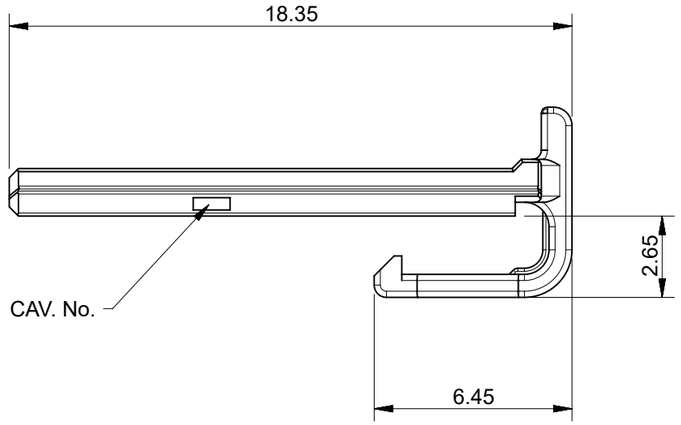

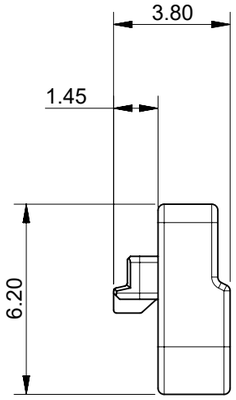

NOTES:
1. MATERIALS : POLYESTER (PBT)-GF17, UL94 V-0
2. APPLICABLE HOUSING : 560123 SERIES
3. GENERAL TOLERANCE : SEE TABLE
4. EVL AND RoHS COMPLIANT
5. PRODUCT SPECIFICATION : PS-560123-00*
6. PACKING SPECIFICATION : PK-560125-001

MATERIAL NUMBER

ORDER NO.	MATERIAL NO.	COLOR
560125-0800	5601250800	GRAY

THIS DRAWING CONTAINS INFORMATION THAT IS PROPRIETARY TO MOLEX ELECTRONIC TECHNOLOGIES, LLC AND SHOULD NOT BE USED WITHOUT WRITTEN PERMISSION

FUNCTIONAL SYMBOLS: FA = 0, FC = 0, FP = 0

DIVISIONAL SYMBOLS

DIMENSION UNITS	SCALE
mm	5:1

GENERAL TOLERANCES (UNLESS SPECIFIED)

ANGULAR TOL	± °
4 PLACES	±
3 PLACES	±
2 PLACES	±
1 PLACE	±
0 PLACES	±

DRAFT WHERE APPLICABLE MUST REMAIN WITHIN DIMENSIONS

CURRENT REV DESC: DRAWING REMASTERED

EC NO: 641821
DRWN: SAKIM 2020/07/17
CHK'D: TOSADA 2020/07/27
APPR: TOSADA 2020/07/27

INITIAL REVISION:
DRWN: YIBAEK 2014/07/09
APPR: SRTAK 2014/08/26

THIRD ANGLE PROJECTION | DRAWING: A3-SIZE | SERIES: 560125

molex

NEW 2.0 PITCH W/B CONN.
REC. 8WAY ISL DURACLIK ISL SERIES

PRODUCT CUSTOMER DRAWING

DOCUMENT NUMBER	DOC TYPE	DOC PART	REVISION
SD-560125-005	PSD	001	A1

MATERIAL NUMBER	CUSTOMER	SHEET NUMBER
5601250800	GENERAL MARKET	1 OF 1

DOCUMENT STATUS	P1	RELEASE DATE	2020/07/27 06:35:28

FORMAT: master_molex-A3
REVISION: J
DATE: 2020/01/14