ENG No:			AE-3190-NA
DIM "D"			(11.43) .450
DIM "C"			(19.05) .750
CCT SIZE	DIM "A"	DIM "B"	PART No
3	(7.92) .312	(11.89) .468	26-19-2031
4	(11.89) .468	(15.85) .624	26-19-2041
5	(15.85) .624	(19.81) .780	26-19-2051
6	(19.81) .780	(23.77) .936	26-19-2061
7	(23.77) .936	(27.74) 1.092	26-19-2071
8	(27.74) 1.092	(31.70) 1.248	26-19-2081
9	(31.70) 1.248	(35.66) 1.404	26-19-2091
10	(35.66) 1.404	(39.62) 1.560	26-19-2101
11	(39.62) 1.560	(43.59) 1.716	26-19-2111
12	(43.59) 1.716	(47.55) 1.872	26-19-2121
13	(47.55) 1.872	(51.51) 2.028	26-19-2131
14	(51.51) 2.028	(55.47) 2.184	26-19-2141
15	(55.47) 2.184	(59.44) 2.340	26-19-2151
16	(59.44) 2.340	(63.40) 2.496	26-19-2161
17	(63.40) 2.496	(67.36) 2.652	26-19-2171
18	(67.36) 2.652	(71.32) 2.808	26-19-2181
19	(71.32) 2.808	(75.29) 2.964	26-19-2191
20	(75.29) 2.964	(79.25) 3.120	26-19-2201

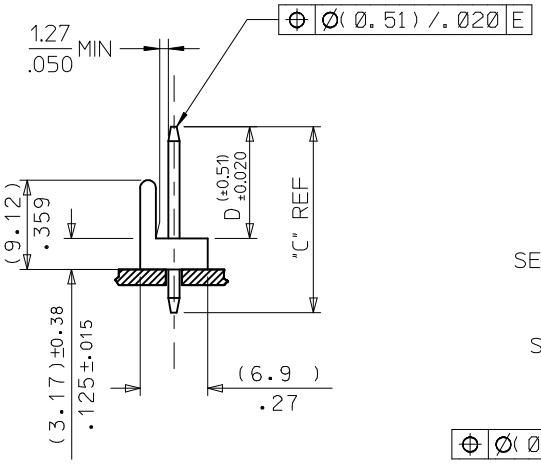

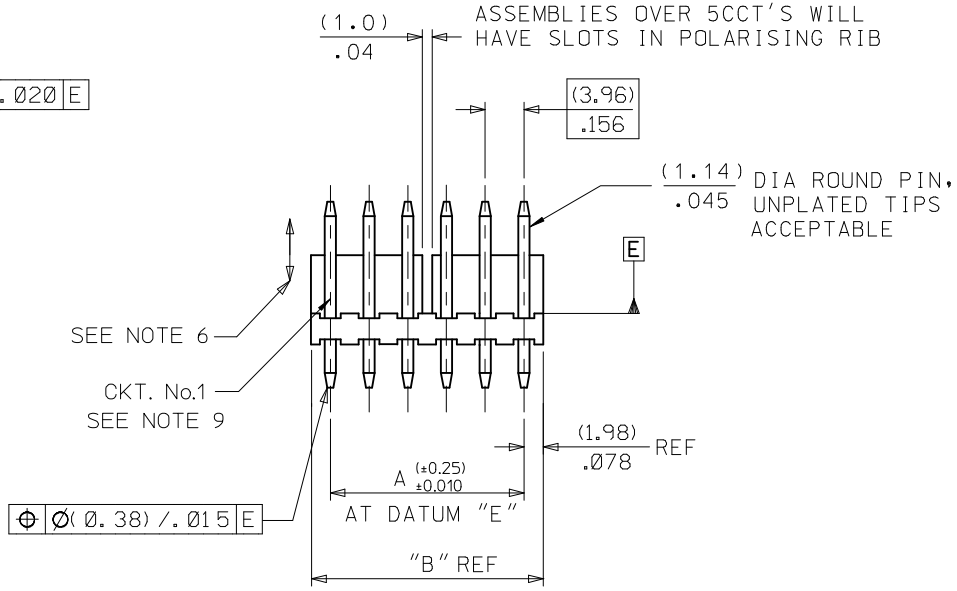

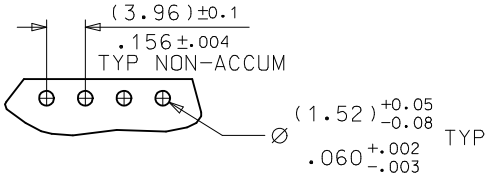

RECOMMENDED PCB HOLE DIMENSIONS

NOTES:
1. MATERIAL: HOUSING: NYLON, UL94V-2, COLOR: NATURAL
   PINS: BRASS
2. FINISH: (0.00254)/.000100 MIN. MATTE TIN OVER
   (0.00127)/.000050 MIN. NICKEL
   UNPLATED TIPS ACCEPTABLE
3. PRODUCT SPECIFICATION: PS-99020-0087
4. PACKAGING SPECIFICATION: PER PK-3190-001
5. THIS PART CONFORMS TO CLASS B REQUIREMENTS OF COSMETIC SPECIFICATION PS-45499-002.
6. PIN PUSHOUT FORCE 3 LBS MIN.
7. PIN MUST CONFORM TO MOLEX SOLDERABILITY SPEC SMES-152 AFTER PLATING.
8. RECOMMENDED PCB BOARD 1.6MM
9. CIRCUIT 1 USED TO DEFINE VOID LOCATION. CIRCUIT 1 MAY OR MAY NOT ALIGN WITH CIRCUIT 1 OF THE MATING PART.

REMOVE 2CKT
EC NO: UCP2016-0549
DRWN:GES 2015/08/06
CHKD:JDFOX 2015/08/06
APPR:FSMITH 2015/08/24
DESCRIPTION
AD1
REV

QUALITY SYMBOLS
F/A=0
F/C=0
F/B=0

GENERAL TOLERANCES (UNLESS SPECIFIED)

	mm	INCH
4 PLACES	± ---	± ---
3 PLACES	± ---	± .010
2 PLACES	± 0.25	± .014
1 PLACE	± 0.35	± ---
0 PLACE	±	±

ANGULAR ±1/2°
DRAFT WHERE APPLICABLE MUST REMAIN WITHIN DIMENSIONS

DIMENSION STYLE: MM/IN
SCALE: 2:1
DESIGN UNITS: METRIC
THIRD ANGLE PROJECTION

		DATE
DRAWN BY	T.MOHON	1998/10/02
CHECKED BY	M.GOONEY	1998/10/02
APPROVED BY	MWILHITE	1998/10/02

TITLE: WAFER POL KK .156 FOR .045 ROUND PINS

molex

MATERIAL NO.: SEE CHART
DOCUMENT NO.: SDAE-3190-N**
SHEET NO.: 1 OF 2
SIZE: B

THIS DRAWING CONTAINS INFORMATION THAT IS PROPRIETARY TO MOLEX INCORPORATED AND SHOULD NOT BE USED WITHOUT WRITTEN PERMISSION