PART NUMBER	PLATINGS ON THE CONTACT AREAS
213205-0002	SILVER OVER NICKEL
213205-0102	TIN OVER NICKEL

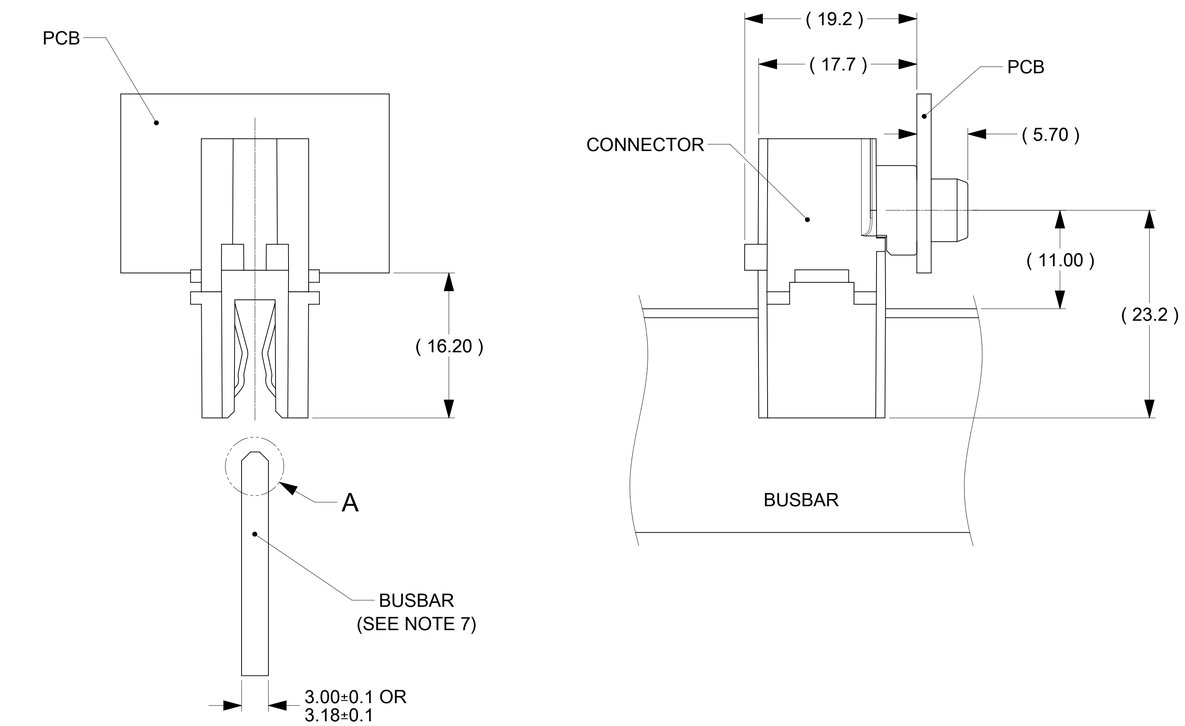

PCB, BUSBAR
IN THESE VIEWS ARE SHOWN FOR REFERENCE ONLY

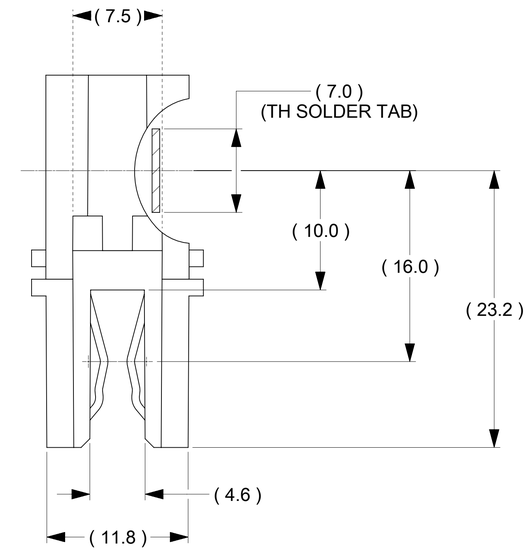

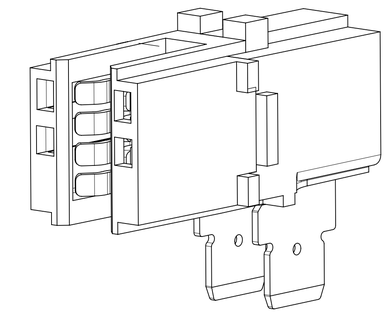

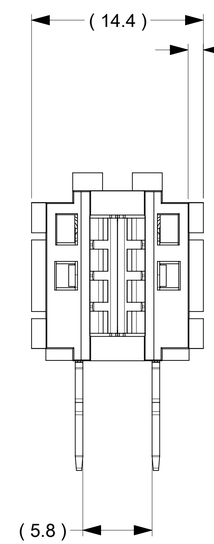

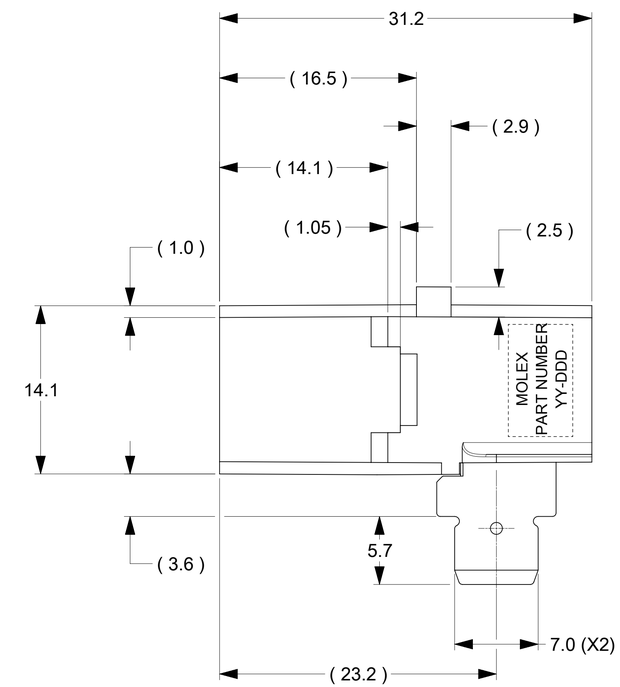

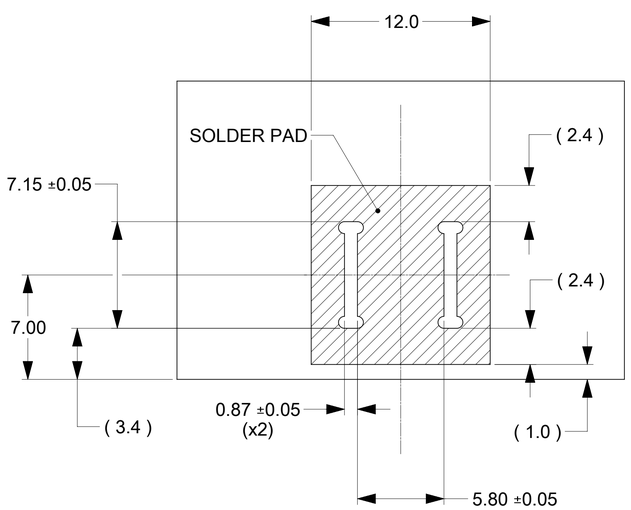

RECOMMENDED PCB LAYOUT
(THICKNESS 4.8mm MAX.)

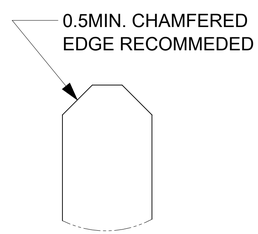

DETAIL A
SCALE 10:1

NOTES:
1. MATERIALS:
   a.HOUSING BODY: POLYMER. UL94V-0; BLACK.
   b.TERMINALS: COPPER ALLOY.
   c. RIVET/CLIP: COPPER ALLOY.
2. PLATING:
   a. CONTACT AREAS: SEE CHART.
   b. TAB AREAS: TIN OVER NICKE.
   c. REST: NICKEL OVERALL.
3. LUBRICATION: LUBED IN CONTACT AREA.
4. REFERENCE DOCUMENT:
   a. SILVER VERSION: 2131910001-PS, 2131910001-AS.
   b. TIN VERSION: 2131910002-PS, 2131910001-AS.
5. MODULE ASSEMBLY IS RoHS COMPLIANT.
6. FINAL ASSEMBLY TO BE PACKAGED AND LABELED PER PACKAGING DRAWING NUMBER 2131910002-PK.
7. MATED BUSBAR SHOULD BE PLATED WITH SILVER OVER NICKEL FOR SILVER VERSION CONNECTOR AND TIN OVER NICKEL FOR TIN VERSION CONNECTOR.

THIS DRAWING CONTAINS INFORMATION THAT IS PROPRIETARY TO MOLEX ELECTRONIC TECHNOLOGIES, LLC AND SHOULD NOT BE USED WITHOUT WRITTEN PERMISSION

FUNCTIONAL SYMBOLS: FA = 0, FC = 0, FE = 0
DIVISIONAL SYMBOLS

DIMENSION UNITS	SCALE
mm	5:1

GENERAL TOLERANCES (UNLESS SPECIFIED)

ANGULAR TOL	±	°
4 PLACES	±	
3 PLACES	±	
2 PLACES	±	0.15
1 PLACE	±	0.25
0 PLACES	±	

DRAFT WHERE APPLICABLE MUST REMAIN WITHIN DIMENSIONS

CURRENT REV DESC:

EC NO: 721831
DRWN: TOMLU 2022/09/19
CHK'D: BPISZCZOR 2023/01/16
APPR: BPISZCZOR 2023/01/16

INITIAL REVISION:
DRWN: TOMLU 2020/06/04
APPR: BPISZCZOR 2022/03/07

THIRD ANGLE PROJECTION | DRAWING: D-SIZE | SERIES: 213205

molex

POWER PLANE BBC SMALL RA-TH

PRODUCT CUSTOMER DRAWING

DOCUMENT NUMBER	DOC TYPE	DOC PART	REVISION
2132050002-SD	PSD	000	B

MATERIAL NUMBER: SEE CHART | CUSTOMER | SHEET NUMBER: 1 OF 1

DOCUMENT STATUS	P1	RELEASE DATE	2023/01/16 22:03:19

TEMPLATE NAME: PRODUCT
REVISION: 21
DATE: 2021/10/01