1971032-3 ✔ ACTIVE

GRACE INERTIA 2.0

TE Internal #: 1971032-3

PCB Mount Header, Vertical, Wire-to-Board, 3 Position, 2 mm [.079 in] Centerline, Fully Shrouded, Tin, Through Hole - Solder, GRACE INERTIA 2.0

View on TE.com >

Connectors > PCB Connectors > PCB Headers & Receptacles

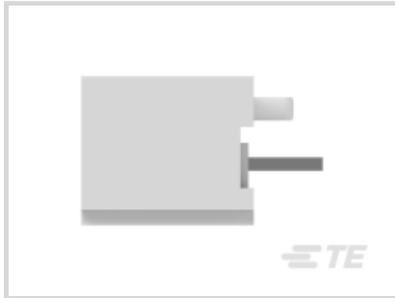

EU RoHS Compliance: **Compliant**

EU ELV Compliance: **Compliant**

PCB Connector Assembly Type: **PCB Mount Header**

PCB Mount Orientation: **Vertical**

Connector System: **Wire-to-Board**

Features

Other

EU RoHS Compliance	Compliant
EU ELV Compliance	Compliant

Product Type Features

PCB Connector Assembly Type	PCB Mount Header
Connector System	Wire-to-Board
Header Type	Fully Shrouded
Sealable	No
Connector & Contact Terminates To	Printed Circuit Board

Configuration Features

PCB Mount Orientation	Vertical
Number of Positions	3
Number of Rows	1

Electrical Characteristics

Operating Voltage	50 VDC

Body Features

Connector & Keying Code	A
Primary Product Color	Natural

Contact Features

Contact Underplating Material	Nickel
Contact Underplating Material Thickness	1 µm[39.37 µin]
PCB Contact Termination Area Plating Material Finish	Bright
Contact Mating Area Plating Material Thickness	2 µm[78.74 µin]
Mating Square Post Dimension	.5 mm[.02 in]
Mating Tab Width	.5 mm[.02 in]
PCB Contact Termination Area Plating Material Thickness	2 µm[78.74 µin]
Contact Shape & Form	Square
Contact Layout	Inline
Contact Base Material	Brass
PCB Contact Termination Area Plating Material	Tin
Contact Mating Area Plating Material Finish	Bright
Contact Mating Area Plating Material	Tin
Contact Type	Tab
Contact Current Rating (Max)	2.2 A

Termination Features

Termination Post & Tail Length	2.6 mm[.102 in]
Square Termination Post & Tail Dimension	.5 mm[.02 in]
Termination Method to PCB	Through Hole - Solder

Mechanical Attachment

Mating Retention Type	Latch
Mating Retention	With
Mating Alignment Type	Keyed
PCB Mount Alignment Type	Locating Posts
PCB Mount Retention	Without
PCB Mount Alignment	With
Connector Mounting Type	Board Mount
Mating Alignment	With

Housing Features

Housing Material	Nylon 6/6 GF
Centerline (Pitch)	2 mm[.079 in]

Dimensions

Connector Width	5.6 mm[.22 in]
PCB Thickness (Recommended)	1.6 mm[.063 in]
Connector Height	6.35 mm[.25 in]
Connector Length	10 mm[.39 in]

Usage Conditions

Operating Temperature Range	-40 – 105 °C[-40 – 221 °F]

Operation/Application

Circuit Application	Signal

Industry Standards

Compatible With Agency/Standards Products	UL
Glow Wire Rating	Standard Part - Not Glow Wire
UL Flammability Rating	UL 94V-0

Packaging Features

Packaging Quantity	400
Packaging Method	Package

Product Compliance

For compliance documentation, visit the product page on TE.com>

EU RoHS Directive 2011/65/EU	Compliant
EU ELV Directive 2000/53/EC	Compliant
China RoHS 2 Directive MIIT Order No 32, 2016	No Restricted Materials Above Threshold
EU REACH Regulation (EC) No. 1907/2006	Current ECHA Candidate List: JUNE 2024 (241) Candidate List Declared Against: JUNE 2024 (241) Does not contain REACH SVHC
Halogen Content	Not Low Halogen - contains Br or Cl > 900 ppm.
Solder Process Capability	Wave solder capable to 260°C

Product Compliance Disclaimer

This information is provided based on reasonable inquiry of our suppliers and represents our current actual knowledge based on the information they provided. This information is subject to change. The part numbers that TE has identified as EU RoHS compliant have a maximum concentration of 0.1% by weight in homogenous materials for lead, hexavalent chromium, mercury, PBB, PBDE, DBP, BBP, DEHP, DIBP, and 0.01% for cadmium, or qualify for an exemption to these limits as defined in the Annexes of Directive 2011/65/EU (RoHS2). Finished electrical and electronic equipment products will be CE marked as required by Directive 2011/65/EU. Components may not be CE marked. Additionally, the part numbers that TE has identified as EU ELV compliant have a maximum concentration of 0.1% by weight in homogenous materials for lead, hexavalent chromium, and mercury, and 0.01% for cadmium, or qualify for an exemption to these limits as defined in the Annexes of Directive 2000/53/EC (ELV). Regarding the REACH Regulation, the information TE provides on SVHC in articles for this part number is based on the latest European Chemicals Agency (ECHA) 'Guidance on requirements for substances in articles' posted at this URL: https://echa.europa.eu/guidance-documents/guidance-on-reach

Compatible Parts

TE Part # 1903392-1
GIC 2.5 W CAP HSG 3P NATURAL

TE Part # 1971032-4
4POS HEADER ASSEMBLY FOR GIC 2.0 EV

TE Part # 1971032-8
8POS HEADER ASSEMBLY FOR GIC 2.0 EV

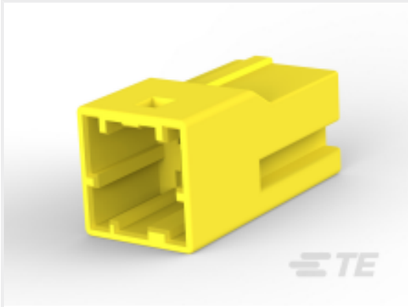

TE Part # CAT-G7534A-C1701
STD Temp Sig GRACE INERTIA Cap

TE Part # 1971032-7
7pos header assembly for gic 2.0 ev

TE Part # 1971032-2
2POS HEADER ASSEMBLY FOR GIC 2.0 EV

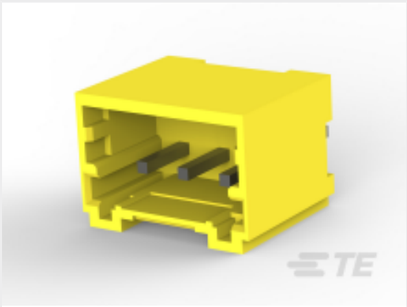

TE Part # 3-1971032-3
3POS HEADER ASSEMBLY FOR GIC 2.0 EV

TE Part # 1971032-9
9POS HEADER ASSEMBLY FOR GIC 2.0 EV

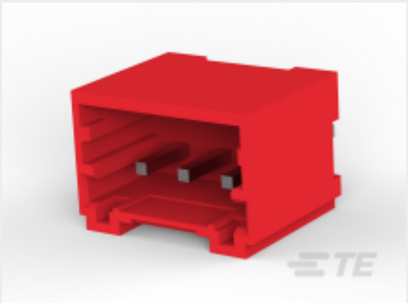

TE Part # 1-1971032-3
3POS HEADER ASSEMBLY FOR GIC 2.0 EV

TE Part # 1-1971032-8
8POS HEADER ASSEMBLY FOR GIC 2.0 EV

TE Part # 1971032-1
10POS HEADER ASSEMBLY FOR GIC 2.0 EV

TE Part # 1971200-1
GIC 2.0 EV 5/8P HEADER ASSEMBLY

Also in the Series | GRACE INERTIA 2.0

Connector Contacts(4)

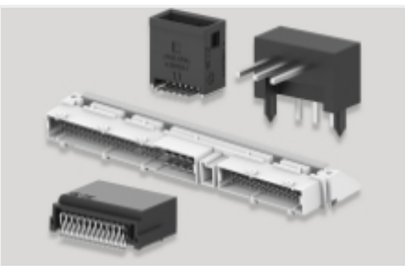

PCB Headers & Receptacles(70)

Rectangular Connector Housings(20)

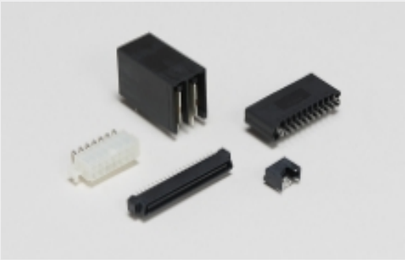

Standard Rectangular Connectors(18)

Wire-to-Board Connector Assemblies & Housings(1)

Customers Also Bought

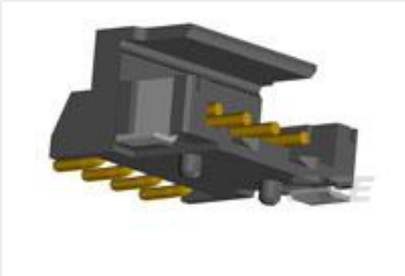

TE Part #1-292173-4
CT BOX HDR H SMT 4P O/TAPE NAT

TE Part #1871843-3
GIC 2.5 HDR ASSY TIN VERSION 3P

TE Part #179844-1
AMP POWER D/LOCK T/HDR ASSY 2P

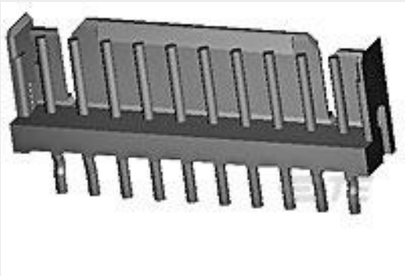

TE Part #6-292161-2
CT P/HDR ASSY V 2P W/KINK BLAC

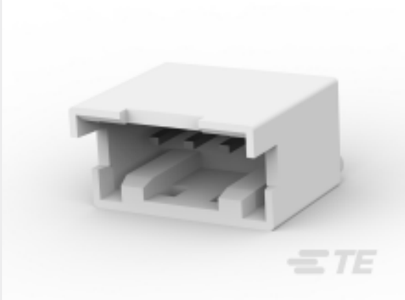

TE Part #1871843-4
GIC2.5 HDR ASSY TIN VERSION 4P NATURAL

TE Part #2-1747052-3
GIC 7.92MM CONN HDR ASS'Y 2POS BLUE

TE Part #179846-1
AMP POWER D/LOCK T/HDR ASSY 3P

TE Part #173724-5
PL EX 187 REC 20-14AWG PTPB

Documents

Product Drawings

3P HEADER ASSEMBLY FOR GIC 2.0 EV

English

CAD Files

3D PDF

3D

Customer View Model

ENG_CVM_CVM_1971032-3_D.2d_dxf.zip

English

Customer View Model

ENG_CVM_CVM_1971032-3_D.3d_igs.zip

English

Customer View Model

ENG_CVM_CVM_1971032-3_D.3d_stp.zip

English

By downloading the CAD file I accept and agree to the Terms and Conditions of use.

Product Specifications

Application Specification

English

Agency Approvals

UL Report

English