NO. OF CIRC.	DIM "A" mm	DIM "A" INCH	DIM "B" mm	DIM "B" INCH	KIT MAT #
2	31.0	[1.22]	21.3	[.84]	387736402
3	40.4	[1.59]	30.9	[1.21]	387736403
4	50.0	[1.97]	40.4	[1.59]	387736404
5	59.4	[2.34]	49.9	[1.96]	387736405
6	69.0	[2.72]	59.4	[2.34]	387736406
7	78.5	[3.09]	69.0	[2.71]	387736407
8	88.0	[3.47]	78.5	[3.09]	387736408
10	107.1	[4.22]	97.5	[3.84]	387736410
12	126.1	[4.97]	116.6	[4.59]	387736412
14	145.2	[5.72]	135.6	[5.34]	387736414
15	154.7	[6.09]	145.2	[5.71]	387736415
16	164.2	[6.47]	154.7	[6.09]	387736416
18	183.3	[7.22]	173.7	[6.84]	387736418
20	202.3	[7.97]	192.8	[7.59]	387736420
27	269.0	[10.59]	259.5	[10.21]	387736427
29	288.0	[11.34]	278.5	[10.96]	387736429

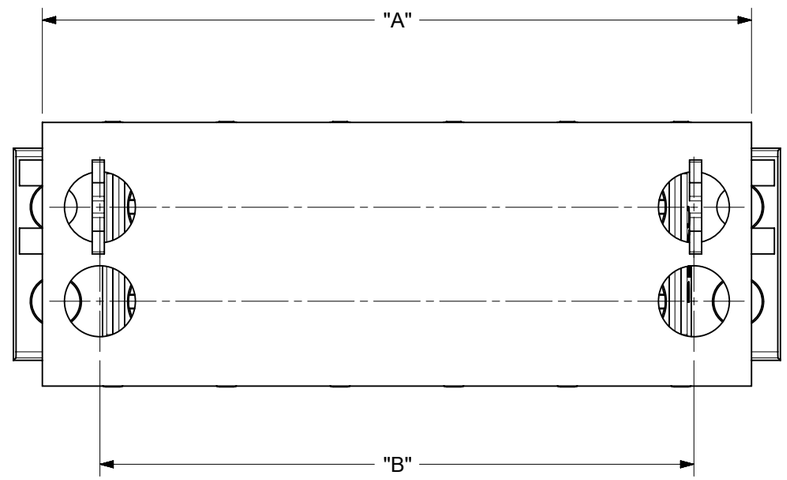

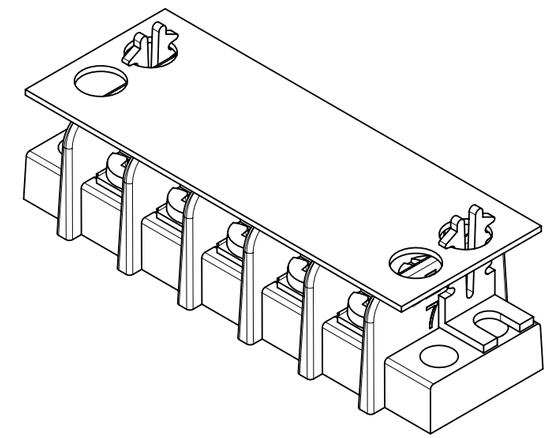

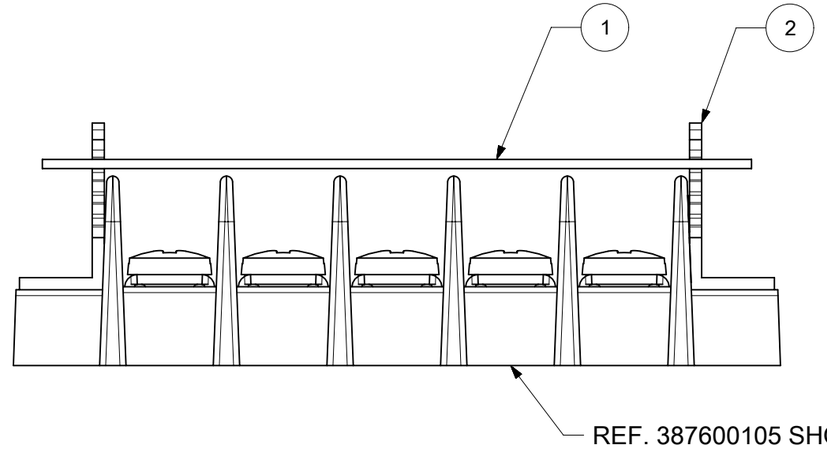

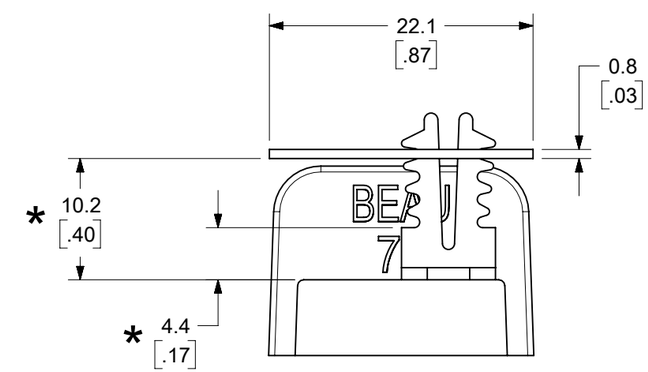

NOTES:
1. MATERIAL: SEE TABLE
2. FINISHES: SEE TABLE
3. PRODUCT SPECIFICATION: NOT REQUIRED
4. PARTS SUPPLIED UNASSEMBLED
5. MATES WITH: 14, 76 AND 77 SERIES BTS
6. (*) DIMENSIONS INDICATE MAX. AND MIN. COVER HEIGHT
7. ROHS COMPLIANT

ITEM	QTY.	DESCRIPTION	MATERIAL	FINISH
2	2	COVER CLIPS	ACETAL	NATURAL
1	1	BTS COVER	VULCANIZED FIBER	BLACK

DOCUMENT STATUS	P1	RELEASE DATE	2024/08/20 07:34:28

TOLERANCES			
MM	TOL	INCH	TOL
0-6	±0.25	0-.24	±.010
>6-30	±0.40	.24-1.18	±.016
>30-120	±0.50	1.18-4.76	±.020
>120	±0.80	>4.76	±.031

THIS DRAWING CONTAINS INFORMATION THAT IS PROPRIETARY TO MOLEX ELECTRONIC TECHNOLOGIES, LLC AND SHOULD NOT BE USED WITHOUT WRITTEN PERMISSION

DIMENSION UNITS: MM/INCH
SCALE: 2:1

GENERAL TOLERANCES (UNLESS SPECIFIED)

	MM	INCH
4 PLACES	±	±
3 PLACES	±	± SEE CHART
2 PLACES	± SEE CHART	± SEE CHART
1 PLACE	± SEE CHART	±
0 PLACES	±	±
ANGULAR TOL	± °	

DRAFT WHERE APPLICABLE MUST REMAIN WITHIN DIMENSIONS

CURRENT REV DESC: REMOVED OBSOLETED PART NUMBERS AS PER PCN#515181

EC NO: 794166
DRWN: VISHAH2 2024/06/06
CHK'D: GGA 2024/08/20
APPR: GGA 2024/08/20

INITIAL REVISION:
DRWN: JENCINAS 2009/04/09
APPR: JMACNEIL 2009/04/13

THIRD ANGLE PROJECTION | DRAWING: B-SIZE | SERIES: 38773

molex

BTS COVER KIT, FLAT

PRODUCT CUSTOMER DRAWING

DOCUMENT NUMBER	DOC TYPE	DOC PART	REVISION
SD-38773-001	PSD	001	B2

MATERIAL NUMBER	CUSTOMER	SHEET NUMBER
SEE TABLE	GENERAL MARKET	1 OF 1

FORMAT: Eng-lega-master-tb-prod-B
REVISION: E1
DATE: 2021/05/01