© – TE Connectivity. All Rights Reserved.

REVISIONS					
P	LTR	DESCRIPTION	DATE	DWN	APVD
	C1	REVISED PER ECR-23-189819	6NOV2023	GS	WH

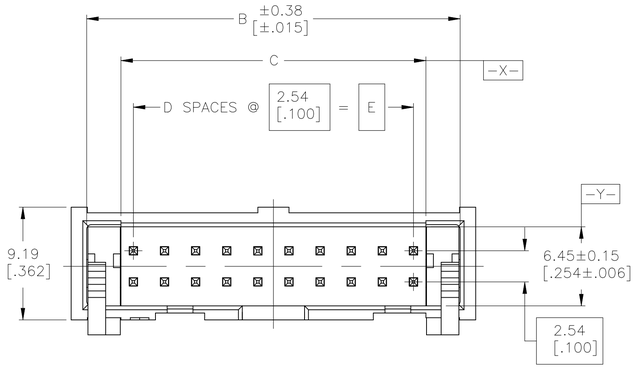

1. HOUSING: PBT, UL94V-0, COLOR: BLUE.
   POSTS: PHOSPHOR BRONZE.
   LATCHES: ZINC ALLOY.
2. POSTS: 0.00076[.000030] MIN GOLD ON MATING AREA, 0.00254[.000100] MIN TIN ON COMPLIANT PIN, ALL OVER 0.00127[.000050] MIN NICKEL ON ENTIRE POST.
   LATCHES: BLACK NICKEL OVER COPPER.
3. DATUMS S & T TO BE ESTABLISHED BY CUSTOMER.
4. HOLE [illegible] AFTER PLATING.
5. [illegible] LOCATION/ORIENTATION FOR POSITION #1 INDICATOR.

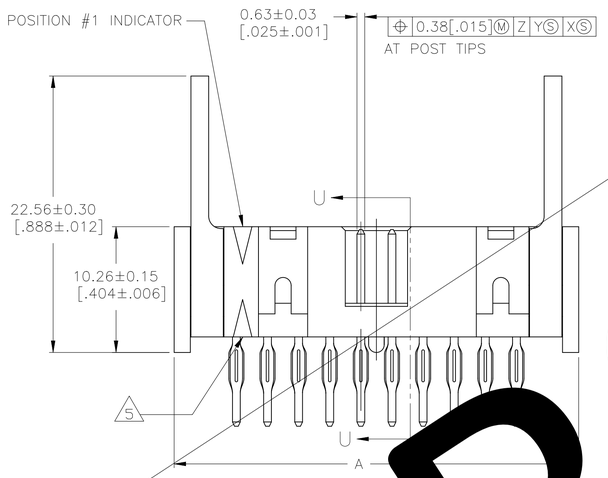

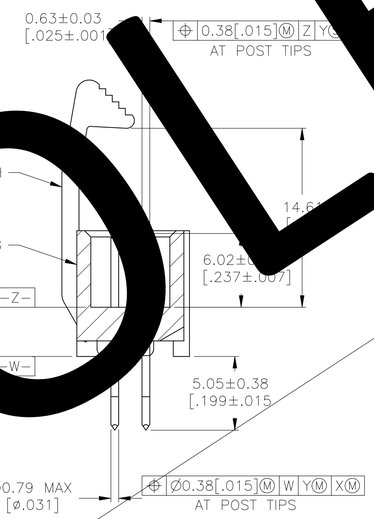

SECTION U–U

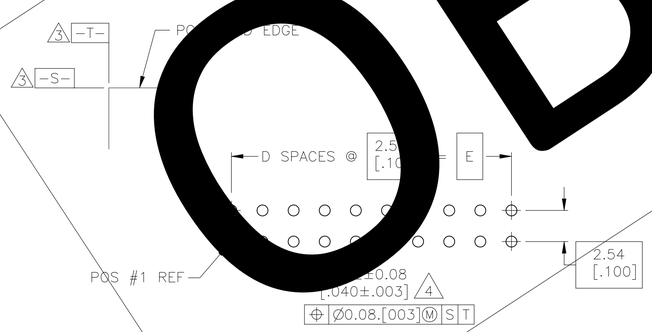

RECOMMENDED PC BOARD LAYOUT
(VIEWED FROM CONNECTOR SIDE)

E	D	C	B	A	NO OF POS	PART NUMBER
78.74 [3.100]	31	80.77 [3.180]	86.26 [3.396]	88.90 [3.500]	64	3-1761723-7
60.96 [2.400]	24	62.99 [2.480]	68.48 [2.696]	71.12 [2.800]	50	3-1761723-5
40.64 [1.600]	16	42.67 [1.680]	48.16 [1.896]	50.80 [2.000]	34	3-1761723-1
83.82 [.400]	4	12.19 [.480]	17.68 [.696]	20.32 [.800]	10	2-1761723-3

THIS DRAWING IS A CONTROLLED DOCUMENT.

DIMENSIONS: mm [INCHES]

TOLERANCES UNLESS OTHERWISE SPECIFIED:
0 PLC ± –
1 PLC ± –
2 PLC ± –
3 PLC ± 0.13[.005]
4 PLC ± –
ANGLES ± –

MATERIAL 1
FINISH 2

DWN B. MCMASTER 07SEP05
CHK S.BOLASH 07SEP05
APVD M.WALMSLEY 07SEP05
PRODUCT SPEC —
APPLICATION SPEC —
WEIGHT 0.000000
CUSTOMER DRAWING

TE Connectivity

NAME HEADER ASSEMBLY, LONG EJECT LATCH, VERTICAL, LOW PROFILE, IDC

SIZE	CAGE CODE	DRAWING NO	RESTRICTED TO
A1	00779	C-1761723	—

SCALE 4:1 SHEET 1 OF 1 REV C1

OBSOLETE