ASSEMBLY PART NUMBER	COLOR	KEYING OPTION	CPA	CLIPSLOT	TOOLED	STATUS SEE NOTE 8
34062-0001	BLACK	A	NO	YES	YES	OBSOLETE
34062-0002	GRAY	B	NO	NO	YES	OBSOLETE
34062-0003	BLACK	C	NO	NO	YES	OBSOLETE
34062-0004	BLACK	D	NO	NO	YES	OBSOLETE
34062-0005	BLACK	A	YES	NO	YES	OBSOLETE
34062-0006	GRAY	B	YES	NO	YES	PLANNED FOR OBSOLESCENCE SEE REFERENCE P/N 34062-0026
34062-0007	BLACK	C	YES	NO	YES	OBSOLETE
34062-0008	BLACK	D	YES	NO	YES	OBSOLETE
34062-0009	GRAY	D	NO	NO	YES	OBSOLETE
34062-0010	GRAY	D	YES	NO	YES	OBSOLETE
34062-0011	BLACK	A	NO	YES	YES	OBSOLETE
34062-0012	GRAY	B	NO	YES	NO	OBSOLETE
34062-0013	BLACK	C	NO	YES	NO	OBSOLETE
34062-0014	BLACK	D	NO	YES	NO	OBSOLETE
34062-0015	BLACK	A	YES	YES	YES	OBSOLETE
34062-0016	GRAY	B	YES	YES	NO	OBSOLETE
34062-0017	BLACK	C	YES	YES	NO	OBSOLETE
34062-0018	BLACK	D	YES	YES	NO	OBSOLETE
34062-0019	GRAY	D	NO	YES	NO	OBSOLETE
34062-0020	GRAY	D	YES	YES	NO	OBSOLETE

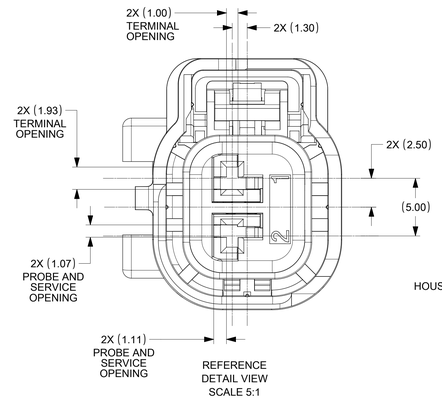

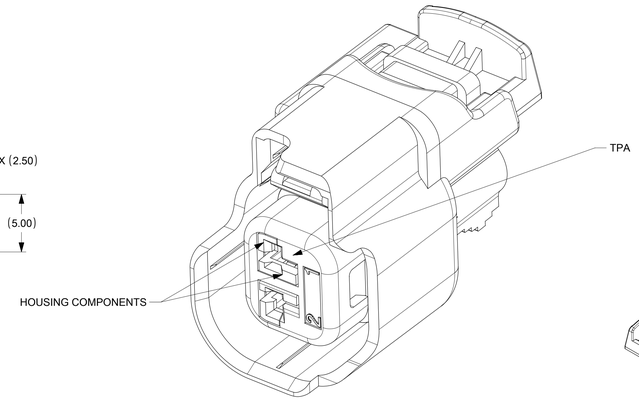

SCALE 5:1

SCALE 1:1

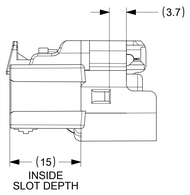

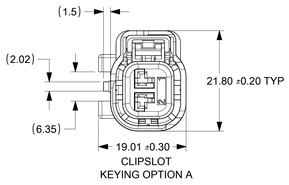

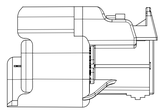

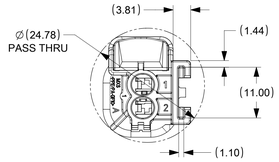

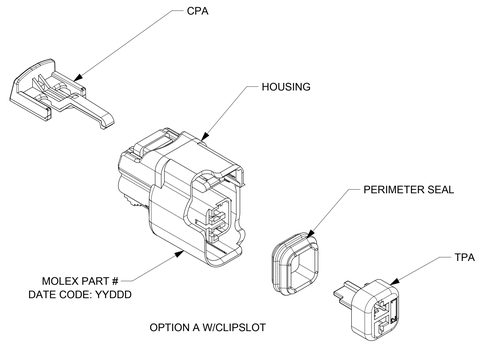

OPTION A W/CLIPSLOT

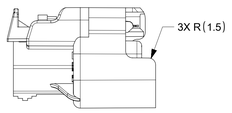

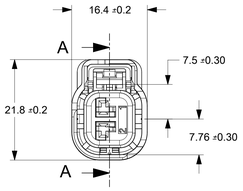

KEYING OPTION A

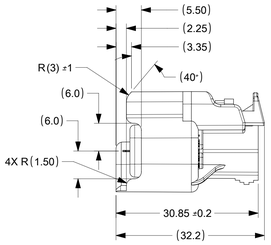

(TPA IN PRE-LOCK POSITION)

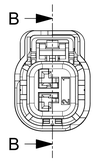

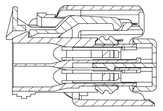

SECTION B-B
(TPA SHOWN IN PRE-LOCK POSITION)
SEE NOTE #3

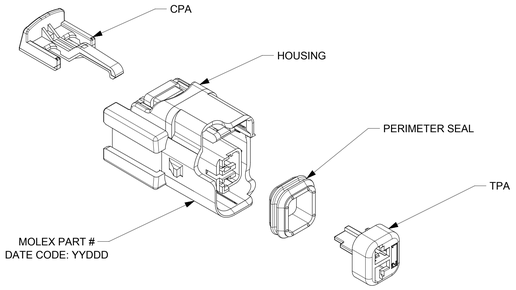

OPTION A CLIP-SLOT

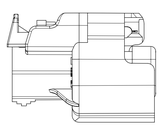

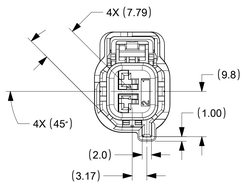

KEYING OPTION B

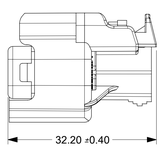

(TPA IN PRE-LOCK POSITION)
(TPA & CPA HELD TIGHT TO HSG)

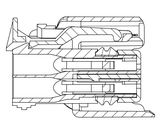

SECTION A-A
(TPA SHOWN IN FINAL-LOCK POSITION)
SEE NOTE #3

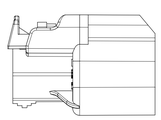

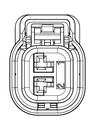

KEYING OPTION C

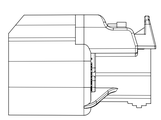

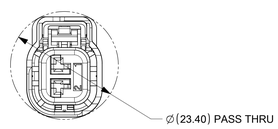

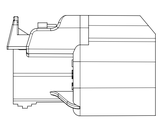

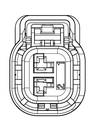

KEYING OPTION D

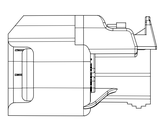

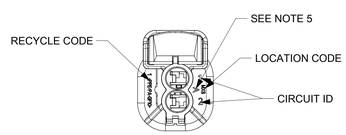

NOTES: UNLESS OTHERWISE SPECIFIED
1. ASSEMBLY CONFORMS TO:
   SAE/USCAR-12, REV 2,
   SAE/USCAR-2 REV 4
   EXCEPT TPA REMOVAL FROM FINAL LOCK - SECOND CYCLE,
   SHALL NOT BE LESS THAN 12 NEWTONS.
   SAE/USCAR-2O DEC. 2001.
2. DESIGNED TO MATE WITH DEVICE CONNECTION AS SPECIFIED IN EWCAP DRAWING 150-S-002-1-Z01 REV A (9-18-2003).
3. ASSEMBLY SHIPPED WITH TPA IN PRE-LOCK POSITION (SEE SECTION B-B PRE-LOCK). UPON FULL TERMINAL ASSEMBLY, EACH TPA MUST BE SNAPPED INTO ITS FINAL-LOCK POSITION.
4. OPTIONAL CPA SHOWN IN ALL VIEWS. SEE TABLES FOR SPECIFIC ASSEMBLY OPTION AND NUMBER.
5. KEYING OPTION AND ASSEMBLY MACHINE IDENTIFIER.
6. RECYCLE CODE FOR PERIMETER SEAL: SILICON 50 DUROMETER
   HOUSING: PPE/PA-GF10
   TPA/CPA: PBT-GF30
7. SYSTEM TESTED USING ESB-M1L123-A, 16,18,20&22 AWG WIRE. MS-8288 AND MS9502 ARE ACCEPTABLE ALTERNATIVES.
8. FOR RECOMMENDED PART NUMBERS NOT SHOWN ON THIS DRAWING SEE SD-34062-002 & SD-34062-004.

AWG	METRIC	WIRE SIZE	PREFERRED TERMINAL	OPTIONAL TERMINAL	PAYOFF DIRECTION	PLATING	GRIP	YAZAKI P/N	WIRE OD RANGE	COLOR	QSR P/N	WIRE OD RANGE	COLOR
22	0.50	34083-2003	34083-0003	RIGHT	TIN	22	7158-3030-50	1.20-1.70	RED	E-1644-01	1.19-1.65	PINK
22	0.50	34083-3003	34083-1003	LEFT	TIN	22	7158-3030-50	1.20-1.70	RED	E-1644-01	1.19-1.65	
22	0.50	34081-2005	34081-0005	RIGHT	GOLD	22	7158-3030-50	1.20-1.70	RED	E-1644-01	1.19-1.65	
22	0.50	34081-3005	34081-1005	LEFT	GOLD	22	7158-3030-50	1.20-1.70	RED	E-1644-01	1.19-1.65	
20	0.75	34083-2002	34083-0002	RIGHT	TIN	18/20	7158-3031-90	1.63-2.40	BLUE	E-1644-00	1.60-2.10	GREEN
20	0.75	34083-3002	34083-1002	LEFT	TIN	18/20	7158-3031-90	1.63-2.40	BLUE	E-1644-00	1.60-2.10	
20	0.75	34081-2004	34081-0004	RIGHT	GOLD	18/20	7158-3031-90	1.63-2.40	BLUE	E-1644-00	1.60-2.10	
20	0.75	34081-3004	34081-1004	LEFT	GOLD	18/20	7158-3031-90	1.63-2.40	BLUE	E-1644-00	1.60-2.10	
18	1.0	34083-2002	34083-0002	RIGHT	TIN	18/20	7158-3031-90	1.63-2.40	BLUE	E-1644-00	1.60-2.10	GREEN
18	1.0	34083-3002	34083-1002	LEFT	TIN	18/20	7158-3031-90	1.63-2.40	BLUE	E-1644-00	1.60-2.10	
18	1.0	34081-2004	34081-0004	RIGHT	GOLD	18/20	7158-3031-90	1.63-2.40	BLUE	E-1644-00	1.60-2.10	
18	1.0	34081-3004	34081-1004	LEFT	GOLD	18/20	7158-3031-90	1.63-2.40	BLUE	E-1644-00	1.60-2.10	
16	1.5	34083-2001	34083-0001	RIGHT	TIN	14/16	7158-3031-90	1.63-2.40	BLUE	E-1644-02	2.10-2.50	YELLOW
16	1.5	34083-3001	34083-1001	LEFT	TIN	14/16	7158-3031-90	1.63-2.40	BLUE	E-1644-02	2.10-2.50	
16	1.5	34081-2003	34081-0003	RIGHT	GOLD	16	7158-3031-90	1.63-2.40	BLUE	E-1644-02	2.10-2.50	
16	1.5	34081-3003	34081-1003	LEFT	GOLD	16	7158-3031-90	1.63-2.40	BLUE	E-1644-02	2.10-2.50	
TERMINAL							CABLE SEAL					

RELEASE STATUS	RELEASE DATE

REV.	DESCRIPTION
L4	NX RE-MASTERING

THIS DRAWING CONTAINS INFORMATION THAT IS PROPRIETARY TO MOLEX ELECTRONIC TECHNOLOGIES, LLC AND SHOULD NOT BE USED WITHOUT WRITTEN PERMISSION

QUALITY SYMBOLS: FA = 0; FC = 0; FP = 0; ▼ = 0; C = 0; ☒ = 0; ■ = 0; C = 0

EC NO: 117955 2017/04/27
DRWN: MSELANGOVAN
CHK'D: KDEKOSKI 2017/06/14
APPR:
REV L4

GENERAL TOLERANCES (UNLESS SPECIFIED)
ANGULAR TOL ± 3.0 °
4 PLACES ±
3 PLACES ±
2 PLACES ± 0.1
1 PLACE ± 0.3
0 PLACES ±
DRAFT WHERE APPLICABLE MUST REMAIN WITHIN DIMENSIONS

DIMENSION UNITS: MM
SCALE: 2:1
DRWN BY: L.P.LIM DATE: 2002/11/15
CHK'D BY: DKOEHLER DATE: 2002/11/25
APPR BY: CPENDLET DATE: 2002/11/25
DRAWING SIZE: E
THIRD ANGLE PROJECTION

molex®

CONNECTOR ASSEMBLY
2-WAY FUEL 1.5MM FEMALE FUEL INJECTOR CONNECTOR

PRODUCT CUSTOMER DRAWING

SERIES	MATERIAL NUMBER	CUSTOMER
34062	SEE TABLE	GENERAL MARKET

DOCUMENT NUMBER	DOC TYPE	DOC PART	SHEET NUMBER
SD-34062-001	PSD	000	1 OF 1

TABLE OF CONTENTS

SHEET NO.	SHEET DESCRIPTION
1	NOTES
2, 3	CONFIGURATIONS
4	RECEPTACLE CONNECTOR ASSEMBLY
5	MOLEX INTERFACE

NOTES: VALID UNLESS OTHERWISE SPECIFIED

1. GENERAL:
a. APPLICATION SPECIFICATION SEE: AS-34062-000
-CONTAINS: PRODUCT INTRODUCTION, PRODUCT SUMMARY, CONNECTOR ASSEMBLY, PACKAGING INFORMATION, CONNECTOR MATING, SERVICE INSTRUCTIONS, ELECTRICAL CONTINUITY CHECKING, CRIMPING, AND TROUBLESHOOTING.
-DESIGNED TO MATE WITH DEVICE CONNECTION AS SPECIFIED IN DRAWING EWCAP 150-S-002-1-Z01. AVAILIBLE AT http://ewcap.uscarteams.org/.
-DESIGNED TO MATE WITH BLADE SEALED ASSEMBLY AS SPECIFIED IN DRAWING: SD-34675-001
-ASSEMBLY SHIPPED WITH TPA IN PRE-LOCK (SEE TPA PRE-LOCK VIEW IN SHEET 4)
b. PRODUCT SPECIFICATION SEE: PS-34062-000
CONTAINS: SCOPE, PRODUCT DESCRIPTION, INTEGRAL COMPONENTS AND ACCESSORIES, APPLICABLE DOCUMENTS AND SPECIFICATIONS, RATINGS, PERFORMANCE, PACKAGING, GAUGE AND FIXTURES, AND OTHER INFORMATION.
c. PACKAGING SPECIFICATION PER MOLEX DRAWING: PK-30907-879
d. PARTS MUST BE IN COMPLIANCE TO MOLEX CHEMICAL SUBSTANCES FOR PRODUCTS AND PACKAGING SPECIFICATION: QEHS-699000-301
e. DATA MUST BE SUBMITTED UNDER THE MOLEX PART NUMBER TO IMDS (COMPANY ID#13255)

2. DESIGN - MATERIALS:
a. SEE BOM TABLE IN SD-34062-004

3. DESIGN - GEOMETRY:
a. THIS IS A 100% CAD GENERATED PART. THE CAD MATHEMATICAL DATA IS THE MASTER FOR THIS PART. FOR DIMENSIONAL OR ANY INFORMATION NOT SHOWN ON THIS DRAWING, ANALYZE THE CAD MODEL.
b. GEOMETRIC DIMENSIONS AND TOLERANCES PER ASME Y14.5M - 1994
c. EDGES AND UNDIMENSIONED DETAILS PER ISO13715
d. CORNERS SHOWN AS SHARP TO BE R 0.2 MAX.
e. LETTERING SHALL BE 0.15 MAX RAISED IN 0.25 MAX RECESS PAD. THIS INCLUDES RECYCLING CODE, CAVITY ID, VENDOR IDENTIFICATION, AND CUSTOMER MATERIAL NUMBER.
f. VISUAL DEFECTS SHALL MEET COSMETIC STANDARD PS-45499-002 (Class B)
g. LASER MARKING: TBD

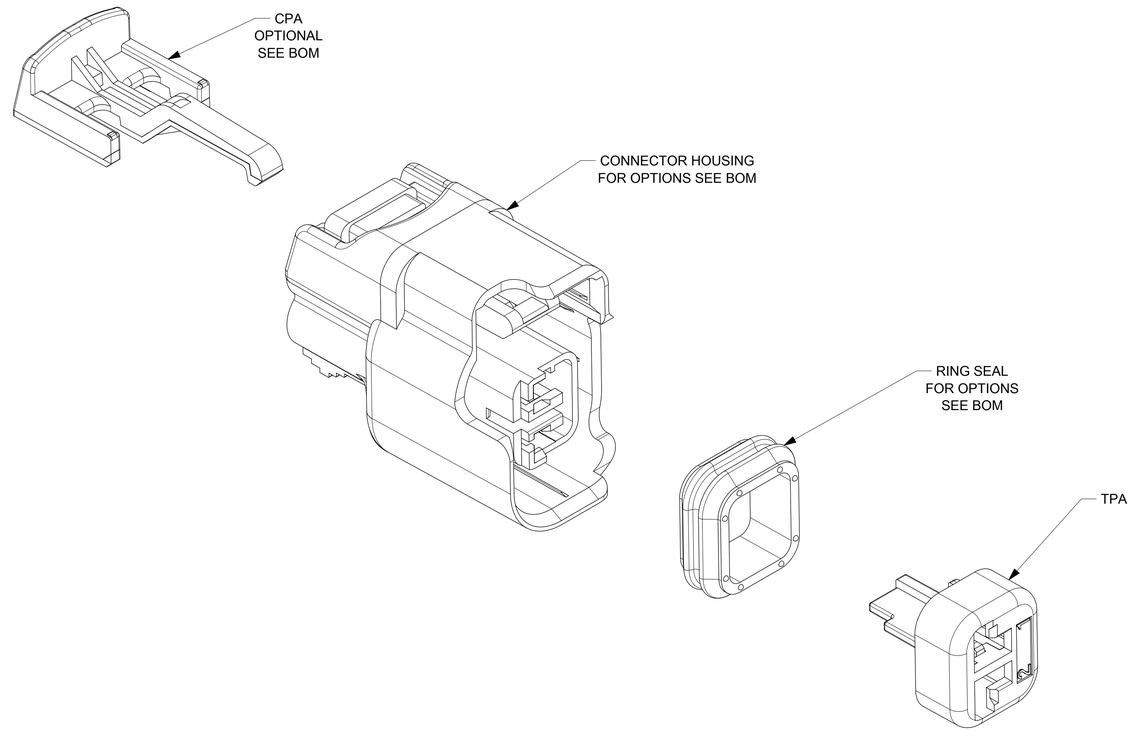

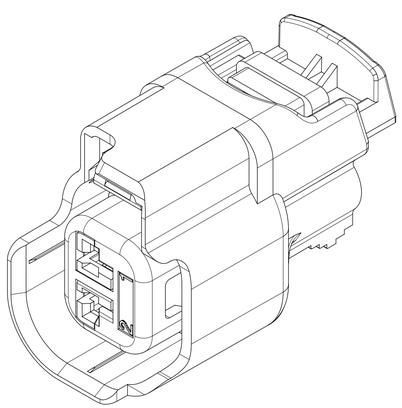

REV.	DESCRIPTION
J19	NX RE-MASTERING
J18	ADDED DIM ICD 64

INSPECTION BALLOON NUMBER LOG

PER DRAWING REVISION: J18

LAST BALLOON NUMBER USED: ICD 64

ADDED BALLOON NUMBERS: ICD 64

REMOVED BALLOON NUMBERS: ICD 7, ICD 8, ICD 9,ICD 18, ICD 19, ICD 20, ICD 41, ICD 42

QUALITY SYMBOLS
EA = 0
EC = 0
EP = 0
▼ = 0
C = 0
☒ = 0
■ = 0
▽ = 0

EC NO: 117955 2017/05/15
DRWN: PKABBUR 2017/06/14
CHK'D: KDEKOSKI
APPR: KDEKOSKI
REV J19

GENERAL TOLERANCES (UNLESS SPECIFIED)
ANGULAR TOL ± 3.0 °
4 PLACES ±
3 PLACES ±
2 PLACES ± 0.1
1 PLACE ± 0.3
0 PLACES ±
DRAFT WHERE APPLICABLE MUST REMAIN WITHIN DIMENSIONS

DIMENSION UNITS: MM
SCALE: 4:1
DRWN BY: KCUNNINGHAM DATE: 2011/11/08
CHK'D BY: MVANSLAMBROU DATE: 1/26/2012
APPR BY: KDEKOSKI DATE: 2017/06/14
DRAWING SIZE: D
THIRD ANGLE PROJECTION

THIS DRAWING CONTAINS INFORMATION THAT IS PROPRIETARY TO MOLEX ELECTRONIC TECHNOLOGIES, LLC AND SHOULD NOT BE USED WITHOUT WRITTEN PERMISSION

molex®

MX150 2 WAY CABLE SEAL
RECEPTACLE CONN. SYSTEM (5.0MM PITCH)

PRODUCT CUSTOMER DRAWING

SERIES	MATERIAL NUMBER	CUSTOMER
34062	SEE NOTE 2a	GENERAL MARKET

DOCUMENT NUMBER	DOC TYPE	DOC PART	SHEET NUMBER
SD-34062-002	PSD	000	1 OF 5

RELEASE STATUS | RELEASE DATE

FORMAT: master-tri-prod-D
DRAWING: SL
DATE: 20-Oct-2004

SHEET DESCRIPTION
CONFIGURATIONS

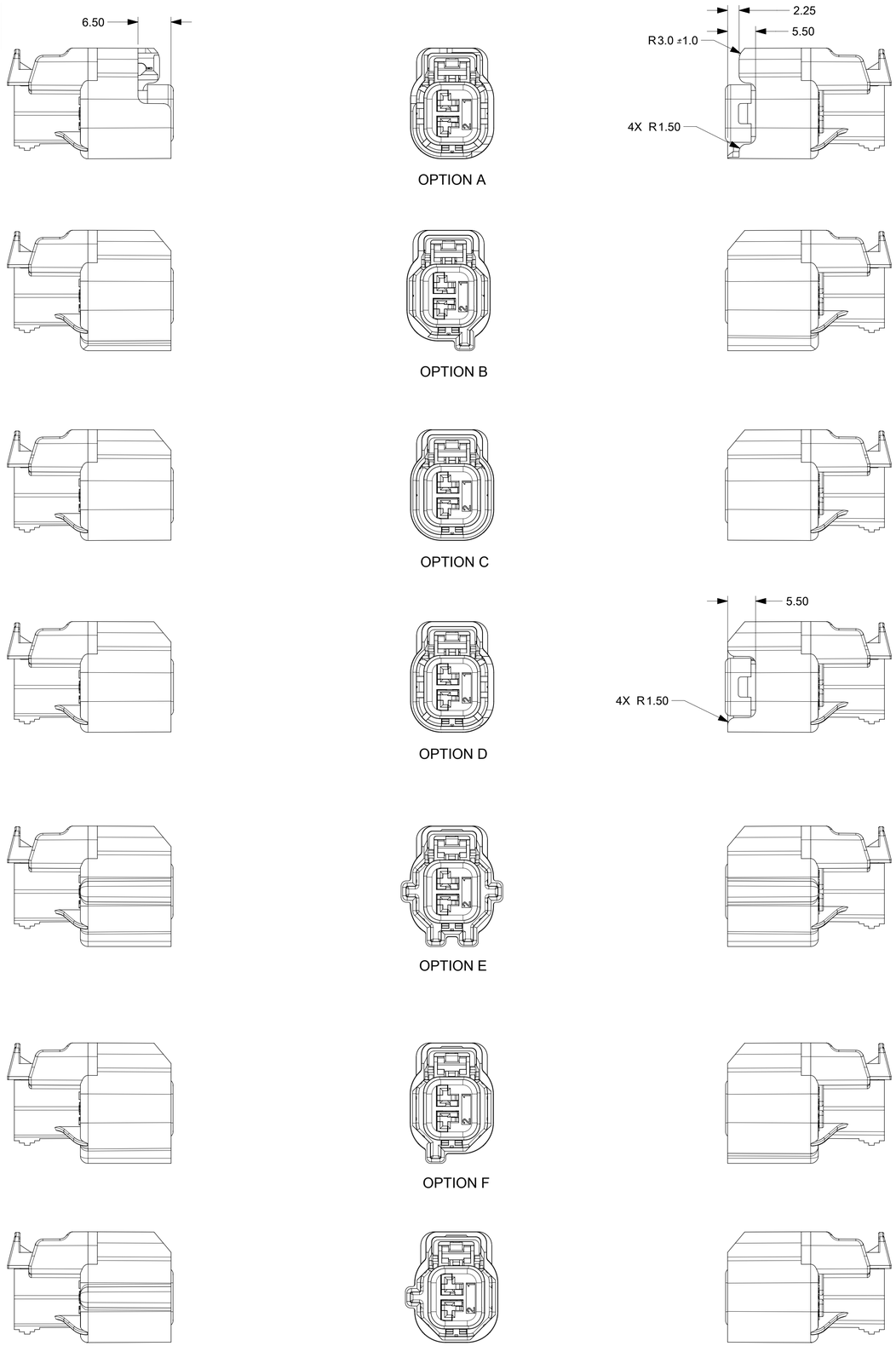

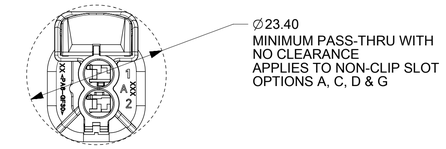

REAR VIEW

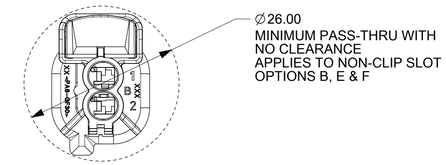

REAR VIEW

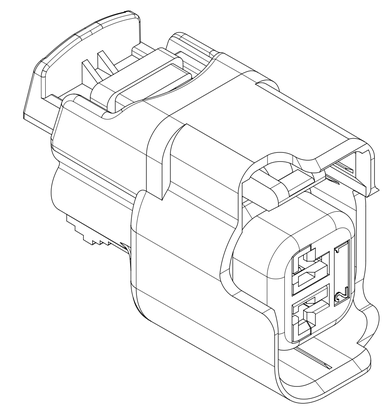

NON CLIP-SLOT OPTION
SCALE 4:1

QUALITY SYMBOLS	
FA	= 0
FC	= 0
FD	= 0
	= 0
FE	= 0
	= 0
	= 0
FG	= 0

THIS DRAWING CONTAINS INFORMATION THAT IS PROPRIETARY TO MOLEX ELECTRONIC TECHNOLOGIES, LLC AND SHOULD NOT BE USED WITHOUT WRITTEN PERMISSION

EC NO: 117955	DRWN: PKABBUR	2017/05/15
	CHK'D:	
	APPR: KDEKOSKI	2017/06/14
REV	J19	

GENERAL TOLERANCES (UNLESS SPECIFIED)	
ANGULAR TOL ± 3.0 °	
4 PLACES	±
3 PLACES	±
2 PLACES	± 0.1
1 PLACE	± 0.3
0 PLACES	±
DRAFT WHERE APPLICABLE MUST REMAIN WITHIN DIMENSIONS	

DIMENSION UNITS	SCALE
MM	2:1
DRWN BY: KCUNNINGHAM	DATE: 2011/11/08
CHK'D BY: MVANSLAMBROU	DATE: 1/26/2012
APPR BY: KDEKOSKI	DATE: 2017/06/14
DRAWING SIZE: D	THIRD ANGLE PROJECTION

molex®

MX150 2 WAY CABLE SEAL
RECEPTACLE CONN. SYSTEM (5.0MM PITCH)

PRODUCT CUSTOMER DRAWING

SERIES	MATERIAL NUMBER	CUSTOMER
34062	SEE NOTE 2a	GENERAL MARKET

DOCUMENT NUMBER	DOC TYPE	DOC PART	SHEET NUMBER
SD-34062-002	PSD	000	2 OF 5

RELEASE STATUS		RELEASE DATE	

FORMAT: 11X8.5 SIZE D
DO NOT SCALE
DATE: 2011/10/26

SHEET DESCRIPTION
CONFIGURATIONS

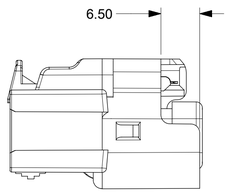

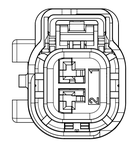

OPTION A W/CLIP-SLOT *

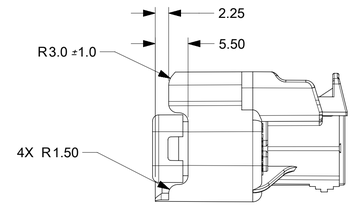

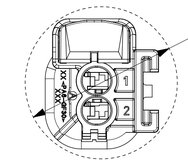

∅25.50
MINIMUM PASS-THRU WITH
NO CLEARANCE
APPLIES TO CLIP-SLOT
OPTIONS A, C & D

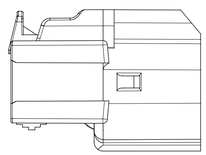

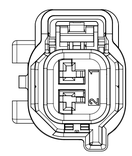

OPTION B W/CLIP-SLOT *

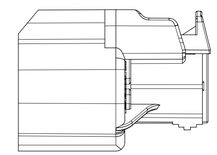

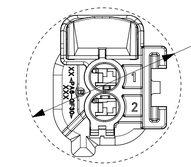

∅26.00
MINIMUM PASS-THRU WITH
NO CLEARANCE
APPLIES TO CLIP-SLOT
OPTION B

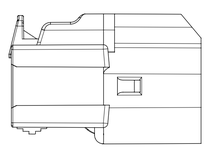

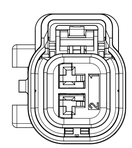

OPTION C W/CLIP-SLOT *

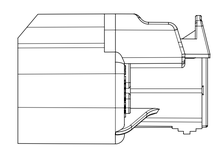

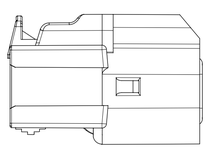

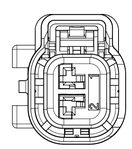

OPTION D W/CLIP-SLOT *

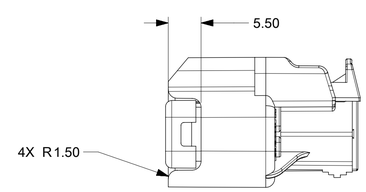

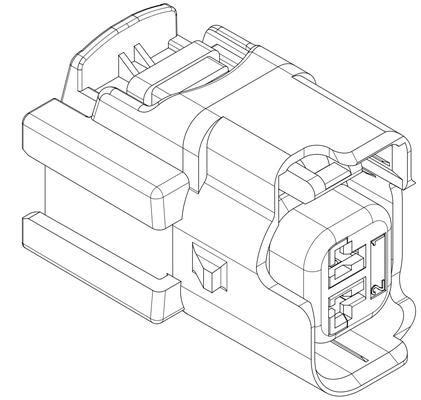

CLIP-SLOT OPTION
SCALE 4:1

* WITH CLIP-SLOT CONFIGURATIONS
DO NOT MEET USCAR PACKAGING FRAME REQUIREMENTS

QUALITY SYMBOLS	
FA	= 0
FC	= 0
FP	= 0
▼	= 0
C	= 0
☒	= 0
■	= 0
G	= 0

THIS DRAWING CONTAINS INFORMATION THAT IS PROPRIETARY TO MOLEX ELECTRONIC TECHNOLOGIES, LLC AND SHOULD NOT BE USED WITHOUT WRITTEN PERMISSION

EC NO: 117955 — DRWN: PKABBUR 2017/05/15 — CHK'D: — APPR: KDEKOSKI 2017/06/14

REV: J19

GENERAL TOLERANCES (UNLESS SPECIFIED)

ANGULAR TOL ±	3.0	°
4 PLACES	±	
3 PLACES	±	
2 PLACES	±	0.1
1 PLACE	±	0.3
0 PLACES	±	

DRAFT WHERE APPLICABLE MUST REMAIN WITHIN DIMENSIONS

DIMENSION UNITS	MM
SCALE	2:1
DRWN BY	KCUNNINGHAM
DATE	2011/11/08
CHK'D BY	MVANSLAMBROU
DATE	1/26/2012
APPR BY	KDEKOSKI
DATE	2017/06/14
DRAWING SIZE	D
THIRD ANGLE PROJECTION	

molex®

MX150 2 WAY CABLE SEAL
RECEPTACLE CONN. SYSTEM (5.0MM PITCH)

PRODUCT CUSTOMER DRAWING

SERIES	MATERIAL NUMBER	CUSTOMER
34062	SEE NOTE 2a	GENERAL MARKET

DOCUMENT NUMBER	DOC TYPE	DOC PART	SHEET NUMBER
SD-34062-002	PSD	000	3 OF 5

RELEASE STATUS		RELEASE DATE	

FORMAT: 11X8.5 SIZE C
REVISION: D
DATE: 2017/05/08

SHEET DESCRIPTION
RECEPTACLE CONNECTOR ASSEMBLY

CHARTED DIMENSIONS

CONFIGURATIONS	DIMENSIONS	
	A	B
OPTIONS A, C, D	16.6	22.0
OPTION B	16.6	23.9
OPTION E	20.2	23.9
OPTION F	16.6	23.9
OPTION G	18.4	22.0
OPTIONS A, C, D W/CLIP-SLOT	19.2	22.0
OPTION B W/CLIP-SLOT	19.2	23.9

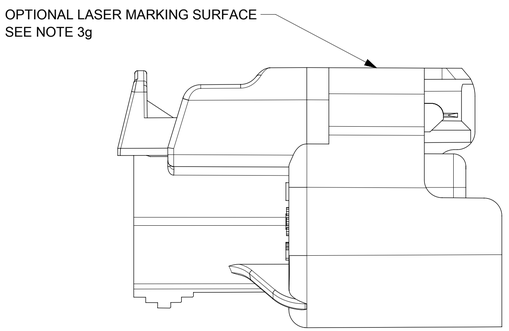

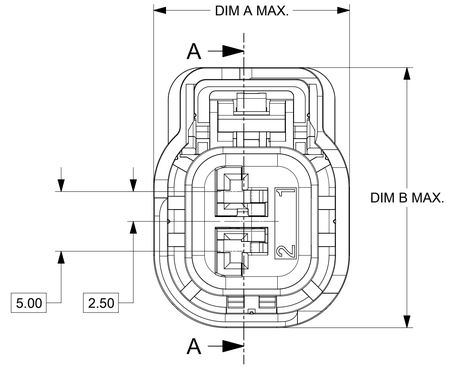

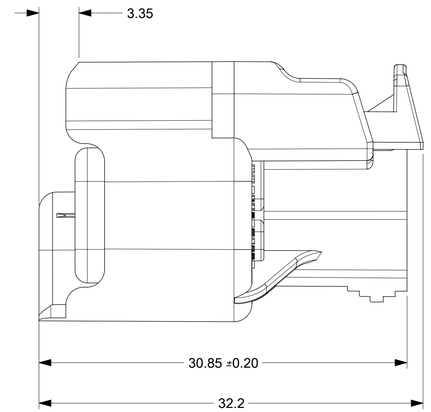

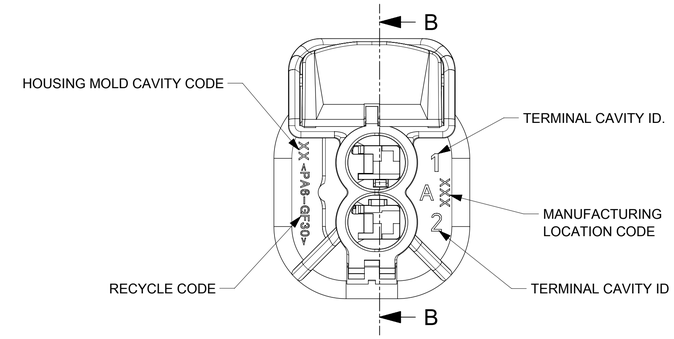

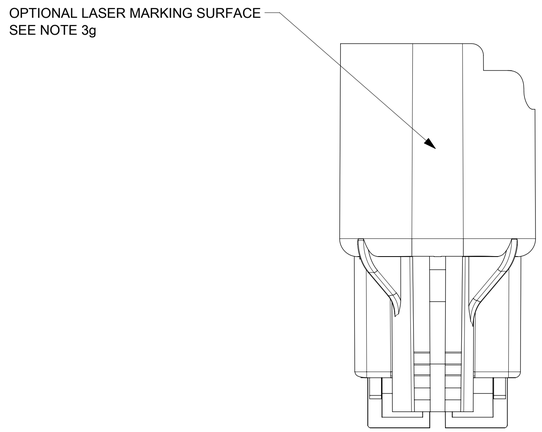

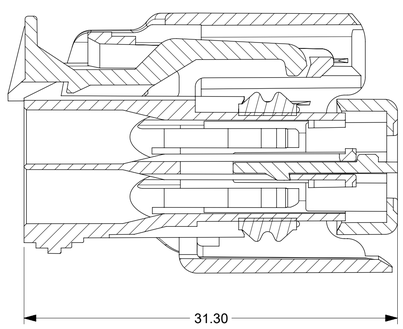

SECTION A-A
TPA SHOWN IN THE
PRE-STAGED POSITION

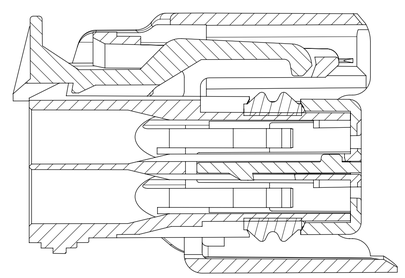

SECTION B-B
TPA SHOWN IN
FINAL-LOCK POSITION

QUALITY SYMBOLS	
= 0	
= 0	
= 0	
= 0	
= 0	
= 0	
= 0	
= 0	

THIS DRAWING CONTAINS INFORMATION THAT IS PROPRIETARY TO MOLEX ELECTRONIC TECHNOLOGIES, LLC AND SHOULD NOT BE USED WITHOUT WRITTEN PERMISSION

EC NO:	117955	2017/05/15
DRWN:	PKABBUR	2017/06/14
CHK'D:		
APPR:	KDEKOSKI	
REV	J19	

GENERAL TOLERANCES (UNLESS SPECIFIED)

ANGULAR TOL	±	3.0 °
4 PLACES	±	
3 PLACES	±	
2 PLACES	±	0.1
1 PLACE	±	0.3
0 PLACES	±	

DRAFT WHERE APPLICABLE MUST REMAIN WITHIN DIMENSIONS

DIMENSION UNITS	MM
SCALE	4:1
DRWN BY	KCUNNINGHAM
DATE	2011/11/08
CHK'D BY	MVANSLAMBROU
DATE	1/26/2012
APPR BY	KDEKOSKI
DATE	2017/06/14
DRAWING SIZE	D
THIRD ANGLE PROJECTION	

molex®

MX150 2 WAY CABLE SEAL
RECEPTACLE CONN. SYSTEM (5.0MM PITCH)

PRODUCT CUSTOMER DRAWING

SERIES	MATERIAL NUMBER	CUSTOMER
34062	SEE NOTE 2a	GENERAL MARKET

DOCUMENT NUMBER	DOC TYPE	DOC PART	SHEET NUMBER
SD-34062-002	PSD	000	4 OF 5

RELEASE STATUS		RELEASE DATE	

FORMAT: molex-tb-prd-D
REVISION: D
DATE: 2017/06/08

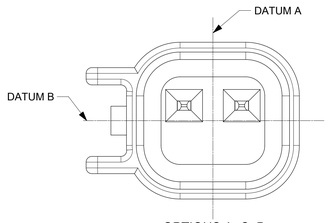

OPTIONS A, C, D
(SAME INTERFACE)

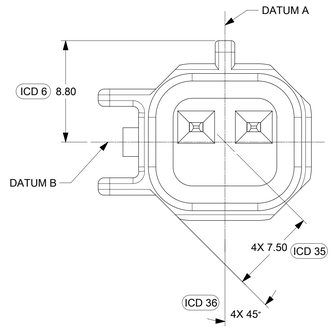

OPTION G

IF A HEADER IS RECESSED INTO A POCKET, THESE DIMENSIONS REPRESENT THE MINIMUM CLEARANCE REQUIRED FOR THE MATING CONNECTOR SHROUD.

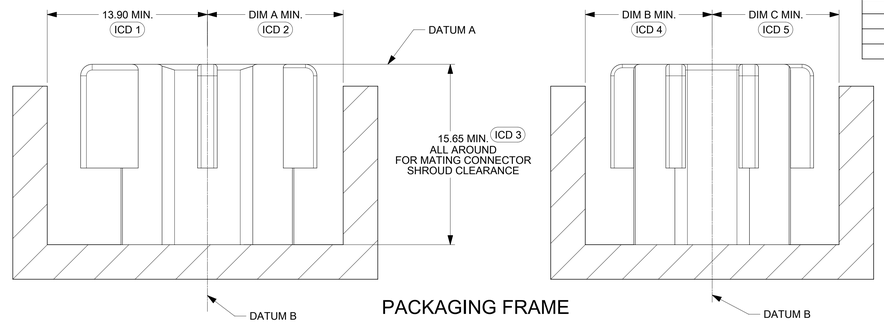

PACKAGING FRAME

KEY OPTION	DIMENSIONS		
	DIM A	DIM B	DIM C
A, C, D	9.90	9.20	9.20
B	11.80	9.20	9.20
E	11.80	11.00	11.00
F	11.80	9.20	9.20
G	9.90	9.20	11.00
H	9.90	11.00	9.20

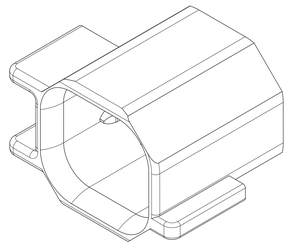

OPTION B

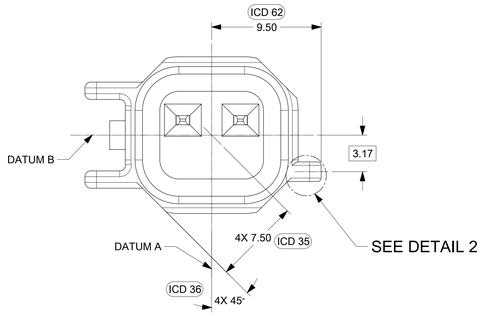

OPTION B

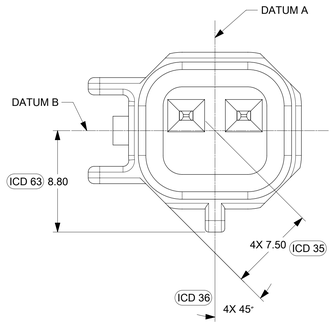

OPTION H

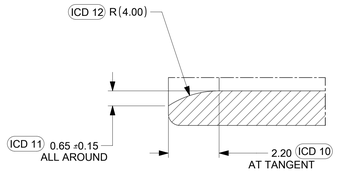

DETAIL 1
SCALE 10:1

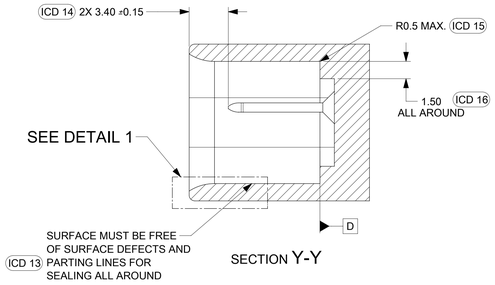

SECTION Y-Y

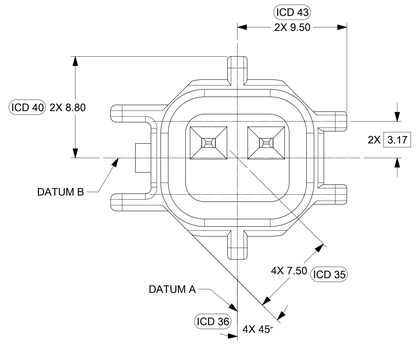

OPTION E

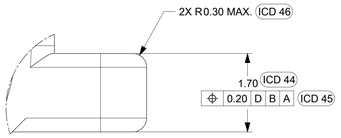

DETAIL 2
SCALE 20:1
TYPICAL
SEE KEYING OPTIONS VIEWS FOR POSITIONS

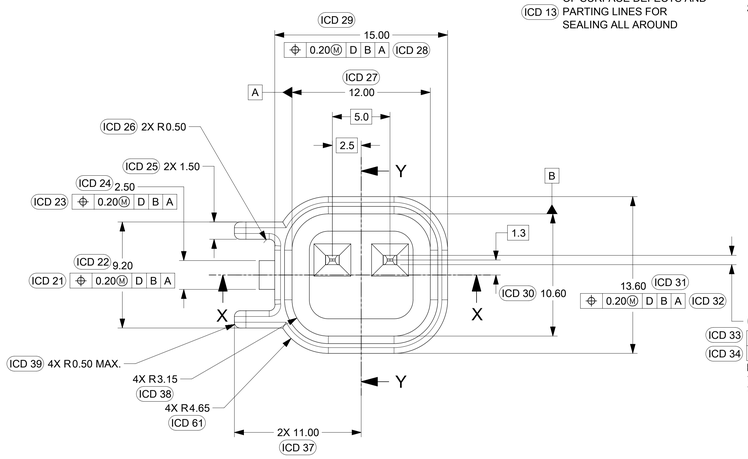

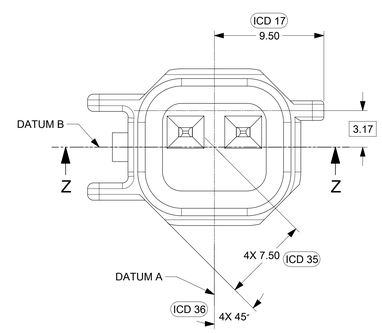

OPTION F

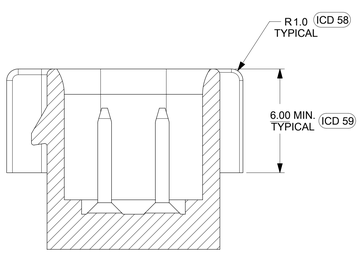

SECTION Z-Z
SEE KEYING OPTION VIEWS FOR POSITIONS

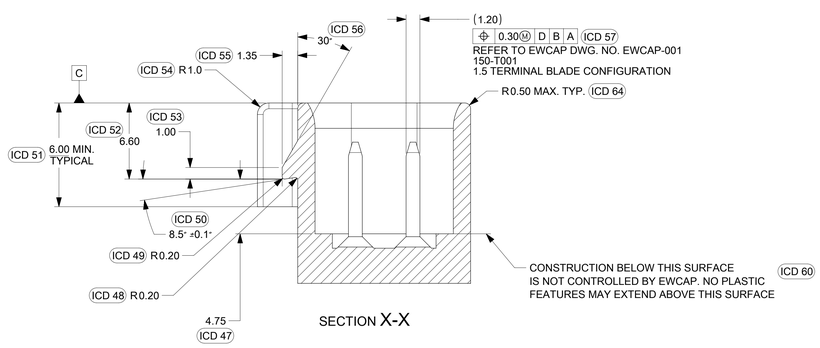

SECTION X-X

NOTES: UNLESS OTHERWISE SPECIFIED

1. ALL DIMENSIONS SHOWN IN MILLIMETERS.
2. DIMENSIONING AND TOLERANCING PER ASME Y14.5M-1994
3. 0.25 RADII ON ALL CORNERS SHOWN SHARP.
4. UNSPECIFIED RADII: 0.25 EXCEPT AS NOTED.
5. STANDARD COLORS FOR POLARIZATION (SEE CHART). DEVIATION REQUIRES APPROVAL OF AUTHORIZED PERSON.
6. REFER TO SAE/USCAR 12 CONNECTOR GUIDELINES FOR ADDITIONAL REQUIREMENTS.
7. EXCEPT WHERE NOTED, DRAFT ON OUTSIDE SURFACES IS PERMISSIBLE WITHIN TOLERANCE.
8. SYMBOL INDICATES DRAFT DIRECTION.
9. FOR TERMINAL MATERIAL, DIMENSIONAL, AND COATING REQUIREMENTS AND ANY BLADE TERMINAL DESIGN INFORMATION NOT SHOWN ON THIS DRAWING SEE EWCAP DWG. NO. EWCAP-001
10. A FULL SHROUD ON THE MATING CONNECTOR IS REQUIRED TO ENSURE THAT THE CONNECTOR-HEADER POLARIZATION FEATURES (OPTIONS A THRU H) WILL FUNCTION. THE FULL SHROUD ALSO PREVENTS SCOOP DAMAGE TO THE HEADER PINS. REFER TO SAE/USCAR-12 CONNECTOR DESIGN GUIDE LINES FOR ADDITIONAL INFORMATION.
11. REFER TO USCAR/EWCAP PART LIST AS FOUND ON WEBSITE http://www.uscarteams.org
12. THIS IS A 100% CAD GENERATED PART. THE CAD MATHEMATICAL DATA IS THE MASTER FOR THIS PART. FOR DIMENSIONAL OR ANY INFORMATION NOT SHOWN ON THIS DRAWING, ANALYZE THE CAD MODEL.

OPTION	COLOR	SIMILAR TO AFL DRAWING R63461 (OPTION GEOMETRY IDENTICAL)	COMMENTS
A, C, D	BLACK	A	
B	LIGHT GRAY	B	
E	BLACK	E	NOT RECOMMENDED MATING CONNECTOR IS UNIVERSAL
F	LIGHT GRAY	D	
G	BLACK	C	
H	LIGHT GRAY	F	

RELEASE STATUS | RELEASE DATE

THIS DRAWING CONTAINS INFORMATION THAT IS PROPRIETARY TO MOLEX ELECTRONIC TECHNOLOGIES, LLC AND SHOULD NOT BE USED WITHOUT WRITTEN PERMISSION

QUALITY SYMBOLS
FA = 0
FC = 0
FP = 0
= 0
C = 0
= 0
= 0
C = 0

EC NO: 117955 2017/05/15
DRWN: PKABBUR
CHK'D: KDEKOSKI 2017/06/14
APPR: KDEKOSKI
J19 REV

GENERAL TOLERANCES (UNLESS SPECIFIED)
ANGULAR TOL ± 3.0 °
4 PLACES ±
3 PLACES ±
2 PLACES ± 0.1
1 PLACE ± 0.3
0 PLACES ±
DRAFT WHERE APPLICABLE MUST REMAIN WITHIN DIMENSIONS

DIMENSION UNITS: MM
SCALE: 5:1
DRWN BY: KCUNNINGHAM DATE: 2011/11/08
CHK'D BY: MVANSLAMBROU DATE: 1/26/2012
APPR BY: KDEKOSKI DATE: 2017/06/14
DRAWING SIZE: E
THIRD ANGLE PROJECTION

molex®

MX150 2 WAY CABLE SEAL
RECEPTACLE CONN. SYSTEM (5.0MM PITCH)

PRODUCT CUSTOMER DRAWING

SERIES	MATERIAL NUMBER	CUSTOMER
34062	N/A	GENERAL MARKET

DOCUMENT NUMBER	DOC TYPE	DOC PART	SHEET NUMBER
SD-34062-002	PSD	000	5 OF 5

molex

MX150 2 WAY CABLE SEAL RECEPTACLE CONNECTION SYSTEM (5.0mm PITCH)
BOM AND PIN OUT SHEET

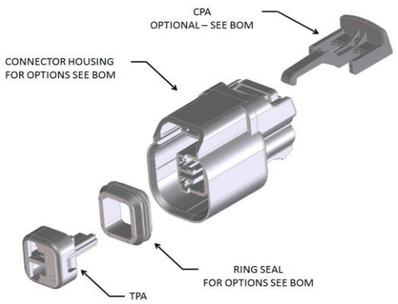

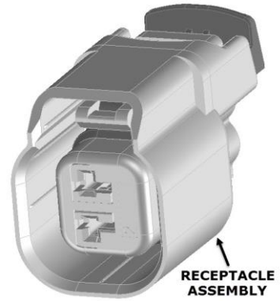

RECOMMENDED MATING DEVICE TABLE			
ABBREVIATION	DESCRIPTION	DRAWING INFORMATION	ADDITIONAL INFORMATION
1	USCAR INTERFACE	150-S-002-1-Z01	http://ewcap.uscarteams.org
2	MOLEX INTERFACE	SD-34062-002 SHEET 5	
3	MOLEX INLINE MALE CONNECTOR	E-34675-001	

BOM/ APPLICABLE COMPONENTS TABLE			
ABBREVIATION	DESCRIPTION	COLOR	MATERIAL
A-BLK	HOUSING OPTION A	BLACK	PA6 GF30
B-LG	HOUSING OPTION B	LIGHT GRAY	PA6 GF30
B-BLK	HOUSING OPTION B	BLACK	PA6 GF30
C-BLK	HOUSING OPTION C	BLACK	PA6 GF30
D-BLK	HOUSING OPTION D	BLACK	PA6 GF30
D-LG	HOUSING OPTION D	LIGHT GRAY	PA6 GF30
E-BLK	HOUSING OPTION E	BLACK	PA6 GF30
F-LG	HOUSING OPTION F	LIGHT GRAY	PA6 GF30
G-BLK	HOUSING OPTION G	BLACK	PA6 GF30
A-BLK-CLIP	HOUSING OPTION A WITH CLIPSLOT	BLACK	PA6 GF30
B-LG-CLIP	HOUSING OPTION B WITH CLIPSLOT	LIGHT GRAY	PA6 GF30
B-BLK-CLIP	HOUSING OPTION B WITH CLIPSLOT	BLACK	PA6 GF30
C-BLK-CLIP	HOUSING OPTION C WITH CLIPSLOT	BLACK	PA6 GF30
D-BLK-CLIP	HOUSING OPTION D WITH CLIPSLOT	BLACK	PA6 GF30
D-LG-CLIP	HOUSING OPTION D WITH CLIPSLOT	LIGHT GRAY	PA6 GF30
A-BLK-SV	HOUSING OPTION A - SEVERE VIBRATION	BLACK	PA6 GF30
C-BLK-SV	HOUSING OPTION C - SEVERE VIBRATION	BLACK	PA6 GF30
D-BLK-SV	HOUSING OPTION D - SEVERE VIBRATION	BLACK	PA6 GF30
R3	RING SEAL TEMP. CLASS 3	MEDIUM BLUE	INHERENTLY LUBRICATED SILICONE
R4	RING SEAL TEMP. CLASS 4	GREEN	INHERENTLY LUBRICATED SILICONE
CPA	CPA	RED	PBT GF30
TPA	INSERT, TPA	NATURAL	PBT GF30

FOR ADDITIONAL INFORMATION SEE SD-34062-002

ASSEMBLY DESCRIPTION	ASSEMBLY PART NUMBER	COMPONENT (THE PRESENCE OF AN ABBREVIATION INDICATES THE PRESENCE OF THAT COMPONENT.)				ASSEMBLY OPERATING TEMPERATURE	RECOMMENDED MATING DEVICE			PRODUCTION TOOL STATUS	COMMENTS	
		HOUSING OPTION/COLOR	TPA	CPA	RING SEAL		1	2	3			
OPTION A, BLACK, W/O CPA	34062-0021	A-BLK	TPA		R3	-40° C TO 125° C	1	2		SALEABLE		
OPTION B, LIGHT GRAY, W/O CPA	34062-0022	B-LG	TPA		R3	-40° C TO 125° C	1	2	3	SALEABLE	PREFERRED, FULLY SHROUDED	
OPTION C, BLACK, W/O CPA	34062-0023	C-BLK	TPA		R3	-40° C TO 125° C	1	2	3	SALEABLE	PREFERRED, FULLY SHROUDED	
OPTION D, BLACK, W/O CPA	34062-0024	D-BLK	TPA		R3	-40° C TO 125° C	1	2		SALEABLE		
OPTION D, LIGHT GRAY, W/O CPA	34062-0029	D-LG	TPA		R3	-40° C TO 125° C	1	2		SALEABLE		
OPTION A, BLACK, W/ CPA	34062-0025	A-BLK	TPA	CPA	R3	-40° C TO 125° C	1	2		SALEABLE		
OPTION B, LIGHT GRAY, W/ CPA	34062-0026	B-LG	TPA	CPA	R3	-40° C TO 125° C	1	2	3	SALEABLE	PREFERRED, FULLY SHROUDED	
OPTION C, BLACK, W/ CPA	34062-0027	C-BLK	TPA	CPA	R3	-40° C TO 125° C	1	2	3	SALEABLE	PREFERRED, FULLY SHROUDED	
OPTION D, BLACK, W/ CPA	34062-0028	D-BLK	TPA	CPA	R3	-40° C TO 125° C	1	2		SALEABLE		
OPTION D, LIGHT GRAY, W/ CPA	34062-0030	D-LG	TPA	CPA	R3	-40° C TO 125° C	1	2		SALEABLE		
OPTION A, BLACK, WITH CLIPSLOT, W/O CPA	34062-0031	A-BLK-CLIP	TPA		R3	-40° C TO 125° C	1	2		SALEABLE		
OPTION B, LIGHT GRAY, WITH CLIPSLOT, W/O CPA	34062-0032	B-LG-CLIP	TPA		R3	-40° C TO 125° C	1	2	3	SALEABLE	PREFERRED, FULLY SHROUDED	
OPTION C, BLACK, WITH CLIPSLOT, W/O CPA	34062-0033	C-BLK-CLIP	TPA		R3	-40° C TO 125° C	1	2	3	SALEABLE	PREFERRED, FULLY SHROUDED	
OPTION D, BLACK, WITH CLIPSLOT, W/O CPA	34062-0034	D-BLK-CLIP	TPA		R3	-40° C TO 125° C	1	2		SALEABLE		
OPTION D, LIGHT GRAY, WITH CLIPSLOT, W/O CPA	34062-0035	D-LG-CLIP	TPA		R3	-40° C TO 125° C	1	2		SALEABLE		
OPTION A, BLACK, WITH CLIPSLOT, W/ CPA	34062-0036	A-BLK-CLIP	TPA	CPA	R3	-40° C TO 125° C	1	2		SALEABLE		
OPTION B, LIGHT GRAY, WITH CLIPSLOT, W/ CPA	34062-0037	B-LG-CLIP	TPA	CPA	R3	-40° C TO 125° C	1	2	3	SALEABLE	PREFERRED, FULLY SHROUDED	
OPTION C, BLACK, WITH CLIPSLOT, W/ CPA	34062-0038	C-BLK-CLIP	TPA	CPA	R3	-40° C TO 125° C	1	2	3	SALEABLE	PREFERRED, FULLY SHROUDED	
OPTION D, BLACK, WITH CLIPSLOT, W/ CPA	34062-0039	D-BLK-CLIP	TPA	CPA	R3	-40° C TO 125° C	1	2		SALEABLE		
OPTION D, LIGHT GRAY, WITH CLIPSLOT, W/ CPA	34062-0040	D-LG-CLIP	TPA	CPA	R3	-40° C TO 125° C	1	2		SALEABLE		
OPTION A, BLACK, SEVERE VIBRATION, W/ CPA	34062-4006	A-BLK-SV	TPA	CPA	R4	-40° C TO 155° C	1	2		SALEABLE		
OPTION C, BLACK, SEVERE VIBRATION, W/ CPA	34062-4008	C-BLK-SV	TPA	CPA	R4	-40° C TO 155° C	1	2		SALEABLE	PREFERRED, FULLY SHROUDED	
OPTION D, BLACK, SEVERE VIBRATION, W/ CPA	34062-4009	D-BLK-SV	TPA	CPA	R4	-40° C TO 155° C	1	2		SALEABLE		
OPTION E, BLACK, W/O CPA	34062-0041	E-BLK	TPA		R4	-40° C TO 155° C		2		SALEABLE	PREFERRED, FULLY SHROUDED	
OPTION F, LIGHT GRAY, W/O CPA	34062-0042	F-LG	TPA		R4	-40° C TO 155° C		2		SALEABLE	PREFERRED, FULLY SHROUDED	
OPTION G, BLACK, W/O CPA	34062-0043	G-BLK	TPA		R4	-40° C TO 155° C		2		SALEABLE	PREFERRED, FULLY SHROUDED	
OPTION E, BLACK, W/ CPA	34062-0044	E-BLK	TPA	CPA	R4	-40° C TO 155° C		2		SALEABLE	PREFERRED, FULLY SHROUDED	
OPTION F, LIGHT GRAY, W/ CPA	34062-0045	F-LG	TPA	CPA	R4	-40° C TO 155° C		2		SALEABLE	PREFERRED, FULLY SHROUDED	
OPTION G, BLACK, W/ CPA	34062-0046	G-BLK	TPA	CPA	R4	-40° C TO 155° C		2		SALEABLE	PREFERRED, FULLY SHROUDED	
OPTION A, BLACK, W/ CPA	34062-0047	A-BLK	TPA	CPA	R3	-40° C TO 125° C	1	2		SALEABLE		
OPTION B, LIGHT GRAY, W/O CPA	34062-0048	B-LG	TPA		R4	-40° C TO 155° C	1	2	3	SALEABLE	PREFERRED, FULLY SHROUDED	
OPTION C, BLACK, W/O CPA	34062-0049	C-BLK	TPA		R4	-40° C TO 155° C	1	2	3	SALEABLE	PREFERRED, FULLY SHROUDED	
OPTION B, LIGHT GRAY, W/ CPA	34062-0050	B-LG	TPA	CPA	R4	-40° C TO 155° C	1	2	3	SALEABLE	PREFERRED, FULLY SHROUDED	
OPTION C, BLACK, W/ CPA	34062-0051	C-BLK	TPA	CPA	R4	-40° C TO 155° C	1	2	3	SALEABLE	PREFERRED, FULLY SHROUDED	
OPTION B, LIGHT GRAY, WITH CLIPSLOT, W/O CPA	34062-0052	B-LG-CLIP	TPA		R4	-40° C TO 155° C	1	2	3	SALEABLE	PREFERRED, FULLY SHROUDED	
OPTION C, BLACK, WITH CLIPSLOT, W/O CPA	34062-0053	C-BLK-CLIP	TPA		R4	-40° C TO 155° C	1	2	3	SALEABLE	PREFERRED, FULLY SHROUDED	
OPTION B, LIGHT GRAY, WITH CLIPSLOT, W/ CPA	34062-0054	B-LG-CLIP	TPA	CPA	R4	-40° C TO 155° C	1	2	3	SALEABLE	PREFERRED, FULLY SHROUDED	
OPTION C, BLACK, WITH CLIPSLOT, W/ CPA	34062-0055	C-BLK-CLIP	TPA	CPA	R4	-40° C TO 155° C	1	2	3	SALEABLE	PREFERRED, FULLY SHROUDED	
OPTION C, BLACK, SEVERE VIBRATION, W/O CPA	34062-4003	C-BLK-SV	TPA		R4	-40° C TO 155° C	1	2		SALEABLE	PREFERRED, FULLY SHROUDED	
OPTION D, BLACK, SEVERE VIBRATION, W/O CPA	34062-4004	D-BLK-SV	TPA		R4	-40° C TO 155° C	1	2		SALEABLE		
OPTION D, BLACK, WITH CLIPSLOT, W/ CPA	34062-0056	D-BLK-CLIP	TPA	CPA	R4	-40° C TO 155° C	1	2		SALEABLE		
OPTION A, BLACK, WITH CLIPSLOT, W/ CPA	34062-0057	A-BLK-CLIP	TPA	CPA	R3	-40° C TO 125° C	1	2		SALEABLE		
OPTION B, BLACK, W/O CPA	34062-0058	B-BLK	TPA		R3	-40° C TO 125° C	1	2	3	SALEABLE	PREFERRED, FULLY SHROUDED	
OPTION B, BLACK, W/ CPA	34062-0059	B-BLK	TPA	CPA	R3	-40° C TO 125° C	1	2	3	SALEABLE	PREFERRED, FULLY SHROUDED	
OPTION B, BLACK, WITH CLIPSLOT, W/O CPA	34062-0060	B-BLK-CLIP	TPA		R3	-40° C TO 125° C	1	2	3	SALEABLE	PREFERRED, FULLY SHROUDED	
OPTION B, BLACK, WITH CLIPSLOT, W/ CPA	34062-0061	B-BLK-CLIP	TPA	CPA	R3	-40° C TO 125° C	1	2	3	SALEABLE	PREFERRED, FULLY SHROUDED	