© – TE Connectivity. All Rights Reserved.

REVISIONS					
P	LTR	DESCRIPTION	DATE	DWN	APVD
	AF	REVISED PER ECR-25-253172	07OCT25	CM	JP

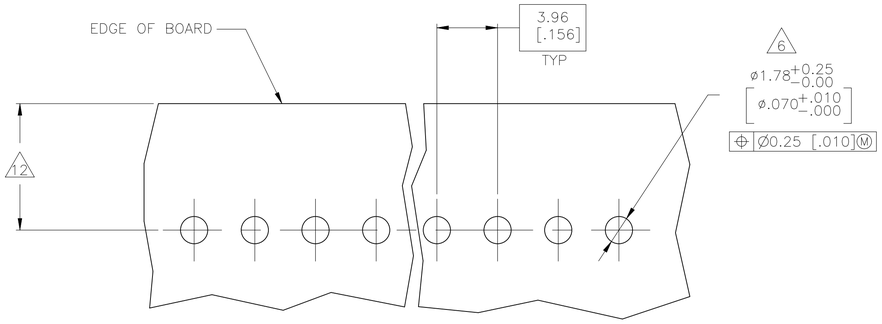

RECOMMENDED MOUNTING HOLE PATTERN
FOR 1.60 [.063] THICK P.C. BOARD 2

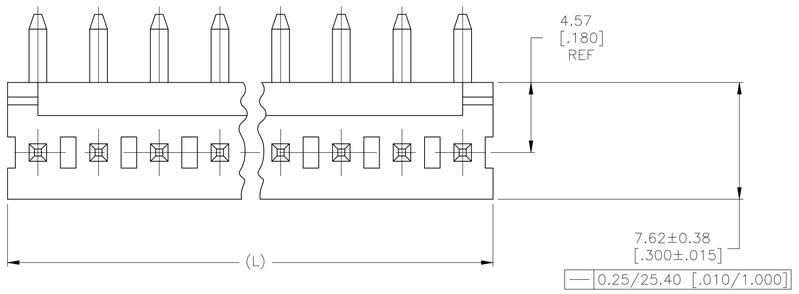

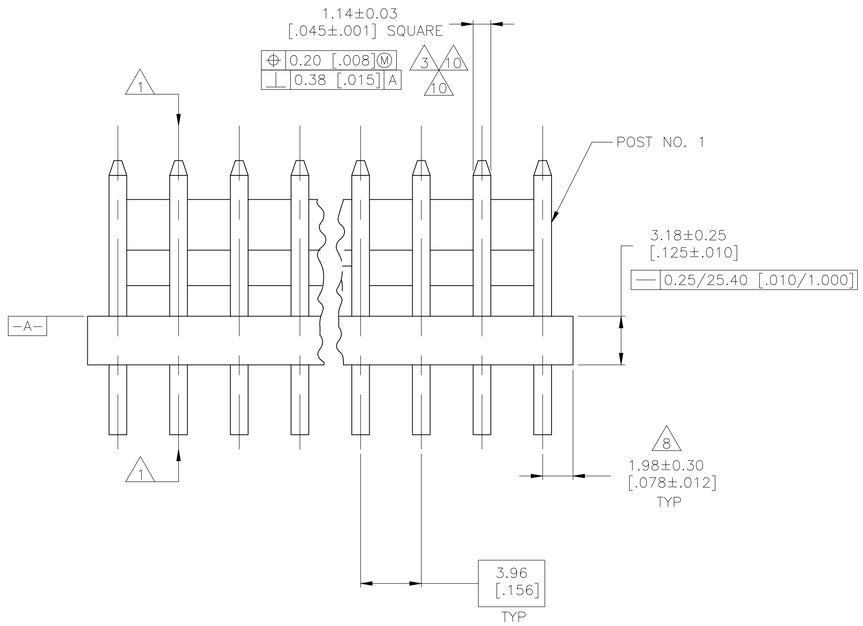

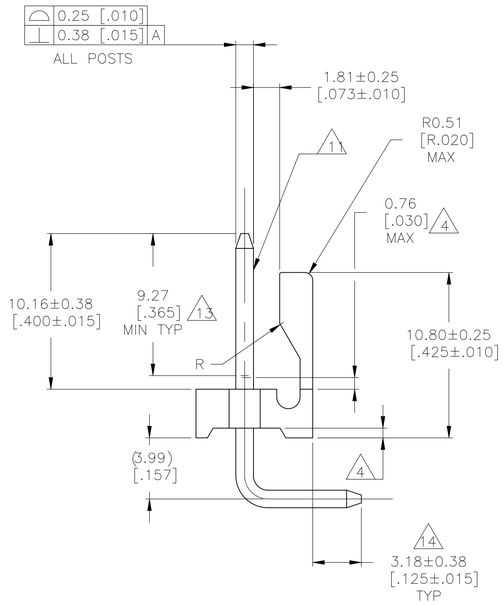

1. POST TO WITHSTAND 13 NEWTONS (3 LBS.) MINIMUM AXIAL FORCE IN BOTH DIRECTIONS SHOWN WITHOUT DISLODGING.
2. TOLERANCES APPLY TO SOLDER SIDE OF BOARD.
3. MEASURED AT SURFACE –A–
4. PLASTIC FLASH PERMITTED IN THIS AREA.
5. PARTS COMPLY WITH AMP SOLDERABILITY SPEC. NO. 109-11-2.
6. ONE HOLE MAY BE UNDERSIZED 1.65/1.52 [.065/.060] DIA. FOR ASSEMBLY RETENTION DURING WAVE SOLDERING.
7. MATERIAL: HEADER–THERMOPLASTIC POLYESTER GLASS–FILLED 94V–0 (NATURAL)
   POST–COPPER ALLOY (SEE NOTES 13 & 14 FOR PLATING)
8. COORDINATE DIMENSION APPLIES FROM CENTER OF ACTUAL FEATURE.
9. PLASTIC BURRS CAUSED BY CUT–OFF TOOLING ARE PERMITTED WITHIN THE MAXIMUM TOLERANCE ENVELOPE.
10. POST TO BE MEASURED WHEN STRIP IS HELD FLAT.
11. POST MUST WITHSTAND TWO 90° BENDS AGAINST EXTRUSION WITHOUT BREAKING.
12. DIMENSION SHOULD BE 12.70–16.51 [.500–.650] MIN WHEN MATING WITH A MTA–156 CONNECTOR ASSEMBLY OR 12.70 [.500] MIN WHEN MATING WITH A SL–156 CONNECTOR ASSEMBLY.
13. PLATING: GOLD PLATE AREA, 0.00076 [.000030] GOLD OR 0.00008 [.000003] MIN GOLD FLASH OVER 0.00068 [.000027] PALLADIUM NICKEL, ONLY IN FUNCTIONAL CONTACT AREA AND OTHER AREAS WITH OPTIMIZED THICKNESS PER TE CONNECTIVITY'S DISCRETION, ALL SIDES, OVER NICKEL UNDERPLATE, 0.00127 [.000050] MIN, ALL SIDES AND ENTIRE LENGTH OF POST.
14. PLATING: BRIGHT TIN/LEAD (93/7) PLATE AREA, 0.00381–0.00889 [.000150–.000350] THICK, ALL FOUR SIDES 3.18 [.125] MINIMUM FOR –2 THRU –24. MATTE TIN PLATE AREA 0.00381–0.00889 [.000150–.000350] THICK ALL FOUR SIDES, 3.18 [.125] FOR –32 THRU –54.
15. OBSOLETE PARTS: OBSOLETE CIS STREAMLINING PER D.RENAUD/D.SINISI
16. OBSOLETE PART

LEAD FREE

DIM (L)	NO.OF POSN	ASSEMBLY
95.10 [3.744]	24	5–641207–4
91.14 [3.588]	23	5–641207–3
87.17 [3.432]	22	5–641207–2
83.21 [3.276]	21	5–641207–1
79.25 [3.120]	20	5–641207–0
75.29 [2.964]	19	4–641207–9
71.32 [2.808]	18	4–641207–8
67.36 [2.652]	17	4–641207–7
63.40 [2.496]	16	4–641207–6
59.44 [2.340]	15	4–641207–5
55.47 [2.184]	14	4–641207–4
51.51 [2.028]	13	4–641207–3
47.55 [1.872]	12	4–641207–2
43.59 [1.716]	11	4–641207–1
39.62 [1.560]	10	4–641207–0
35.66 [1.404]	9	3–641207–9
31.70 [1.248]	8	3–641207–8
27.74 [1.092]	7	3–641207–7
23.77 [.936]	6	3–641207–6
19.81 [.780]	5	3–641207–5
15.85 [.624]	4	3–641207–4
11.89 [.468]	3	3–641207–3
7.92 [.312]	2	3–641207–2

CONTAINS LEAD

DIM (L)	NO.OF POSN	ASSEMBLY
95.10 [3.744]	24	~~2–641207–4~~ 15
91.14 [3.588]	23	~~2–641207–3~~ 15
87.17 [3.432]	22	~~2–641207–2~~ 15
83.21 [3.276]	21	~~2–641207–1~~ 15
79.25 [3.120]	20	~~2–641207–0~~ 15
75.29 [2.964]	19	~~1–641207–9~~ 15
71.32 [2.808]	18	~~1–641207–8~~ 15
67.36 [2.652]	17	~~1–641207–7~~ 15
63.40 [2.496]	16	~~1–641207–6~~ 15
59.44 [2.340]	15	~~1–641207–5~~ 15
55.47 [2.184]	14	1–641207–4
51.51 [2.028]	13	~~1–641207–3~~ 15
47.55 [1.872]	12	~~1–641207–2~~ 15
43.59 [1.716]	11	~~1–641207–1~~ 15
39.62 [1.560]	10	~~1–641207–0~~ 15
35.66 [1.404]	9	~~641207–9~~ 15
31.70 [1.248]	8	~~641207–8~~ 16
27.74 [1.092]	7	~~641207–7~~ 15
23.77 [.936]	6	~~641207–6~~ 16
19.81 [.780]	5	~~641207–5~~ 15
15.85 [.624]	4	~~641207–4~~ 15
11.89 [.468]	3	~~641207–3~~ 15
7.92 [.312]	2	641207–2

THIS DRAWING IS A CONTROLLED DOCUMENT.

DIMENSIONS: mm [INCHES]

TOLERANCES, UNLESS OTHERWISE SPECIFIED:
0 PLC ± –
1 PLC ± –
2 PLC ± 0.13 [.005]
3 PLC ± –
4 PLC ± –
ANGLES ± –

MATERIAL 7
FINISH 7

DWN S. HOOVER 07NOV02
CHK D. BOSSI 07NOV02
APVD D. BOSSI 07NOV02
PRODUCT SPEC –
APPLICATION SPEC –
WEIGHT –

TE Connectivity

NAME MTA–156 HEADER ASSY, F/L, RIGHT ANGLE, REAR BEND, .045 SQ POST, .000030 GOLD

SIZE A1 | CAGE CODE 00779 | DRAWING NO C–641207 | RESTRICTED TO –

CUSTOMER DRAWING | SCALE 5:1 | SHEET 1 OF 1 | REV AF

4805 (1/15)