MAT'L NO (LOOSE PC)	ENG NO (LOOSE PC)	MAT'L NO (ON TAPE)	ENG NO (ON TAPE)	WIRE GAGE	COLOR	∅"ID" MIN	"L" REF	∅"D" REF	"H" REF
191640010	SA-269	191640807	SA-269T	22-18	RED	.054 (1.37)	1.43 (36.3)	.156 (3.96)	.555 (14.10)
191640009	SA-259	-	-				1.48 (37.6)	.180 (4.57)	-
191640040	SB-289	191640315	SB-289T	16-14	BLUE	.080 (2.03)	1.43 (36.3)	.156 (3.96)	.555 (14.10)
191640039	SB-279	191640314	SB-279T				1.48 (37.6)	.180 (4.57)	.495 (12.57)

C1

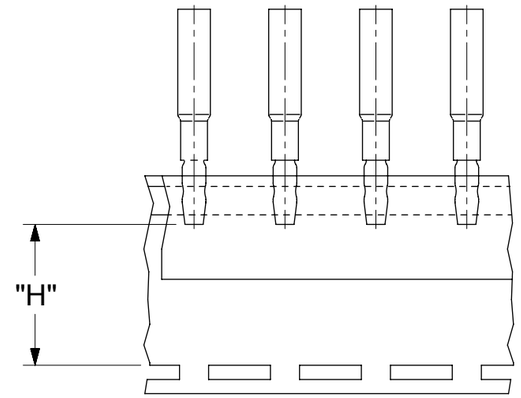

PARTS ON TAPE

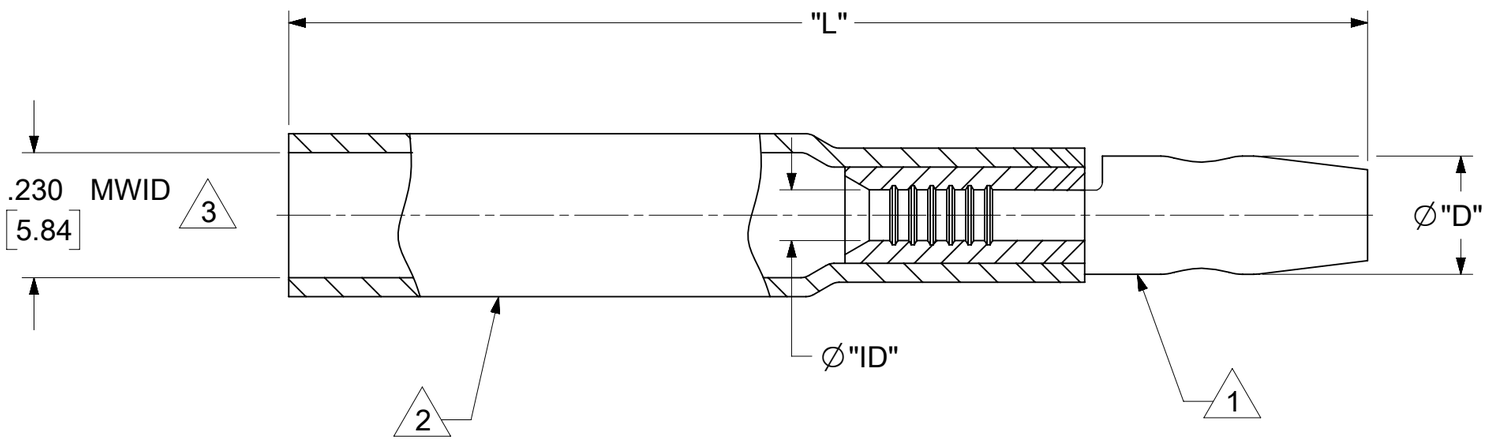

NOTES:

1. TERMINAL: TIN PLATED COPPER.
2. INSULATION: HEAT SHRINKABLE NIAC TUBING WITH HOT-MELT ADHESIVE LINER.
3. MWID = MAXIMUM WIRE INSULATION DIAMETER.
4. MUST BE RoHS COMPLIANT.

THIS DRAWING CONTAINS INFORMATION THAT IS PROPRIETARY TO MOLEX ELECTRONIC TECHNOLOGIES, LLC AND SHOULD NOT BE USED WITHOUT WRITTEN PERMISSION

FUNCTIONAL SYMBOLS: EA = 0, EC = 0, EP = 0

DIVISIONAL SYMBOLS

DIMENSION UNITS: INCH/MM
SCALE: NTS

GENERAL TOLERANCES (UNLESS SPECIFIED)

	MM	INCH
4 PLACES	±	±
3 PLACES	±	±
2 PLACES	±	±
1 PLACE	±	±
0 PLACES	±	±
ANGULAR TOL	± °	

DRAFT WHERE APPLICABLE MUST REMAIN WITHIN DIMENSIONS

CURRENT REV DESC: DIM "H" WAS .640

EC NO: 813590
DRWN: DEANNM1 2025/02/21
CHK'D: ETHRODAHL 2025/02/25
APPR: ETHRODAHL 2025/02/25

INITIAL REVISION:
DRWN: ASAYDEH 2005/12/21
APPR: JPAWLICK 2005/12/21

THIRD ANGLE PROJECTION
DRAWING: B-SIZE
SERIES: 19164

molex

SNAP PLUG PERMA-SEAL
22-18 AWG, 16-14 AWG

PRODUCT CUSTOMER DRAWING

DOCUMENT NUMBER	DOC TYPE	DOC PART	REVISION
SD-19164-031	PSD	001	C1

MATERIAL NUMBER:
CUSTOMER: GENERAL MARKET
SHEET NUMBER: 1 OF 1

DOCUMENT STATUS	P1	RELEASE DATE	2025/02/25 20:32:17

FORMAT: Eng-lega-master-tb-prod-B
REVISION: E1
DATE: 2021/05/01