THIS DRAWING IS UNPUBLISHED. RELEASED FOR PUBLICATION MAR ,1984.
© COPYRIGHT 1984 BY TYCO ELECTRONICS CORPORATION. ALL RIGHTS RESERVED.

LOC	DIST
J	—

REVISIONS 変更

P	LTR	DESCRIPTION	DATE	DWN	APVD
	E	REVISED FJB0-0393-03	07MAY03	H.T	I.E

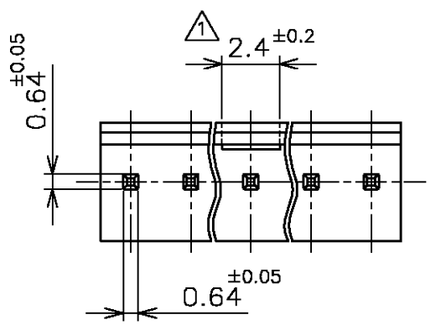

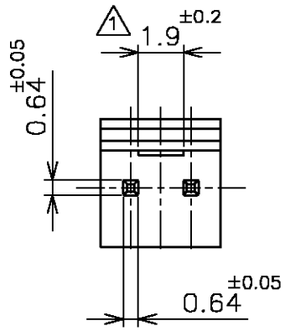

1. ロッキング凹部位置は長手方向の中央。
2. 塩ビケース詰製品(自動機対応)は図番172800参照のこと。
3. プリント基板穴径は下記参照してください。

穴径 ＼ 加工	パンチ加工穴	ドリル加工穴
øE	$0.9^{+0.1}_{-0}$	$1.1^{\pm0.05}$

1. LOCKING HOLE IS PLACED ON THE CENTER OF POST HEADER.
2. REFERENCE TO P/N 172800 ABOUT TUBE PACKING ITEM FOR AUTO MOUNTING MACHINE.
3. RECOMMENDED HOLE DIA DIMENSION ON PWB

HOLE DIA	POUNCHED HOLE	DRILL HOLE
øE	$0.9^{+0.1}_{-0}$	$1.1^{\pm0.05}$

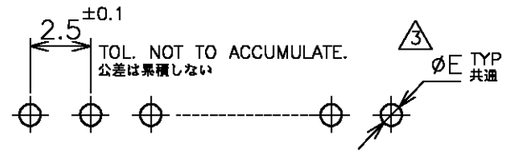

RECOMMENDED BOARD LAYOUT (1.6 THK)
取付基板穴寸法(基板厚1.6t)

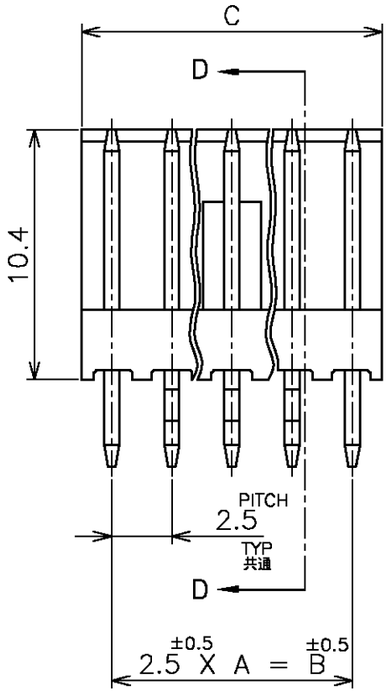

3~12 POS
極

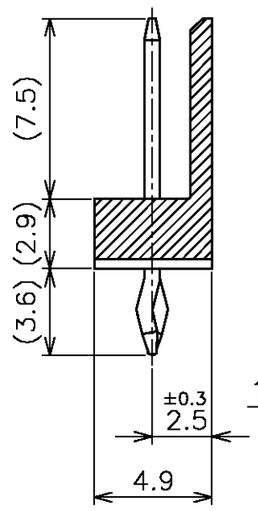

D–D

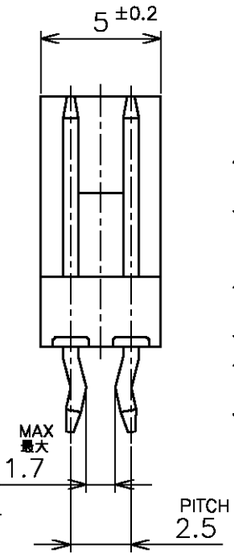

2 POS
極

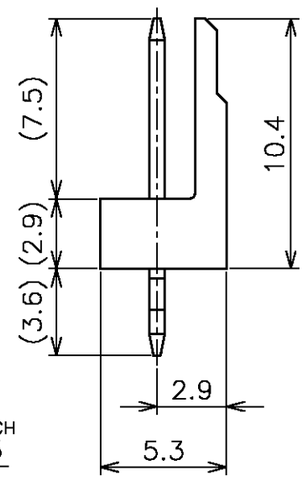

BULE 青色	30.0	27.5	11	12	5–172800–2		5–172732–2	
	25.0	22.5	9	10	5–	–0	5–	–0
	22.5	20.0	8	9	4–	–9	4–	–9
	20.0	17.5	7	8	4–	–8	4–	–8
	17.5	15.0	6	7	4–	–7	4–	–7
	15.0	12.5	5	6	4–	–6	4–	–6
	12.5	10.0	4	5	4–	–5	4–	–5
	10.0	7.5	3	4	4–	–4	4–	–4
	7.5	5.0	2	3	4–	–3	4–	–3
	5.0	2.5	—//—	2	4–172800–2		4–172732–2	
BLACK 黒色	30.0	27.5	11	12	3–172800–2		3–172732–2	
	25.0	22.5	9	10	3–	–0	3–	–0
	22.5	20.0	8	9	2–	–9	2–	–9
	20.0	17.5	7	8	2–	–8	2–	–8
	17.5	15.0	6	7	2–	–7	2–	–7
	15.0	12.5	5	6	2–	–6	2–	–6
	12.5	10.0	4	5	2–	–5	2–	–5
	10.0	7.5	3	4	2–	–4	2–	–4
	7.5	5.0	2	3	2–	–3	2–	–3
	5.0	2.5	—//—	2	2–172800–2		2–172732–2	
NATURAL 自然色	30.0	27.5	11	12	1–172800–2		1–172732–2	
	25.0	22.5	9	10	1–	–0	1–	–0
	22.5	20.0	8	9		–9		–9
	20.0	17.5	7	8		–8		–8
	17.5	15.0	6	7		–7		–7
	15.0	12.5	5	6		–6		–6
	12.5	10.0	4	5		–5		–5
	10.0	7.5	3	4		–4		–4
	7.5	5.0	2	3		–3		–3
	5.0	2.5	—//—	2	172800–2		172732–2	
COLOR 色	$C^{\pm0.2}$	$B^{\pm0.5}$	A	NO OF POS 極数	TUBE PACKING P/N 塩ビケース詰 型番 2		PART NUMBER 型番	

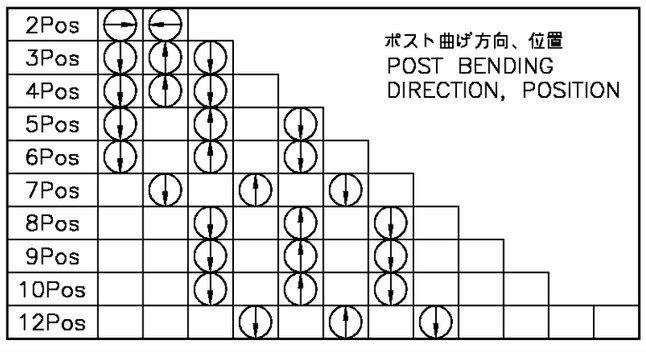

ポスト曲げ方向、位置
POST BENDING DIRECTION, POSITION

THIS DRAWING IS A CONTROLLED DOCUMENT.

DIMENSIONS: 単位：耗 MM

TOLERANCES UNLESS OTHERWISE SPECIFIED: 一般公差

0 PLC	± 0.3
1 PLC	± 0.3
2 PLC	± 0.3
3 PLC	± 0.3
4 PLC	± 0.3
ANGLES	±

MATERIAL 材料 HSG : 66NYLON UL94V–0
POST: BRASS

FINISH 仕上 POST: TIN–PLATE

DWN	A.IMAI	06MAR84
CHK	N.ONOUE	06MAR84
APVD	N.ONOUE	06MAR84
PRODUCT SPEC 製品規格		
APPLICATION SPEC 取付適用規格		
WEIGHT		

CUSTOMER DRAWING

tyco Electronics
Tyco Electronics AMP K.K.
Kawasaki, Japan

NAME 名称
POST HEADER ASSY (VERTICAL) WITH KINK
AMP EI SERIES CONNECTOR

SIZE	CAGE CODE	DRAWING NO 番号	RESTRICTED TO
A3	00779	C-172732	—

SCALE 尺度	SHEET	OF	REV
4:1	1	1	E

AMP 1470–19 REV 31MAR2000

03APR03 8:35am H:\DM-TEC\Check-out\172732_1-c.dwg