© – TE Connectivity. All Rights Reserved.

REVISIONS					
P	LTR	DESCRIPTION	DATE	DWN	APVD
	P5	REVISED PER ECR-25-255998	15SEP2025	SA	DSC

AMP WIRE RANGE	Listed	LR7189 Certified
12-10 AWG SOLID OR STRANDED	12-10 AWG SOLID OR STRANDED	12-10 AWG SOLID OR STRANDED

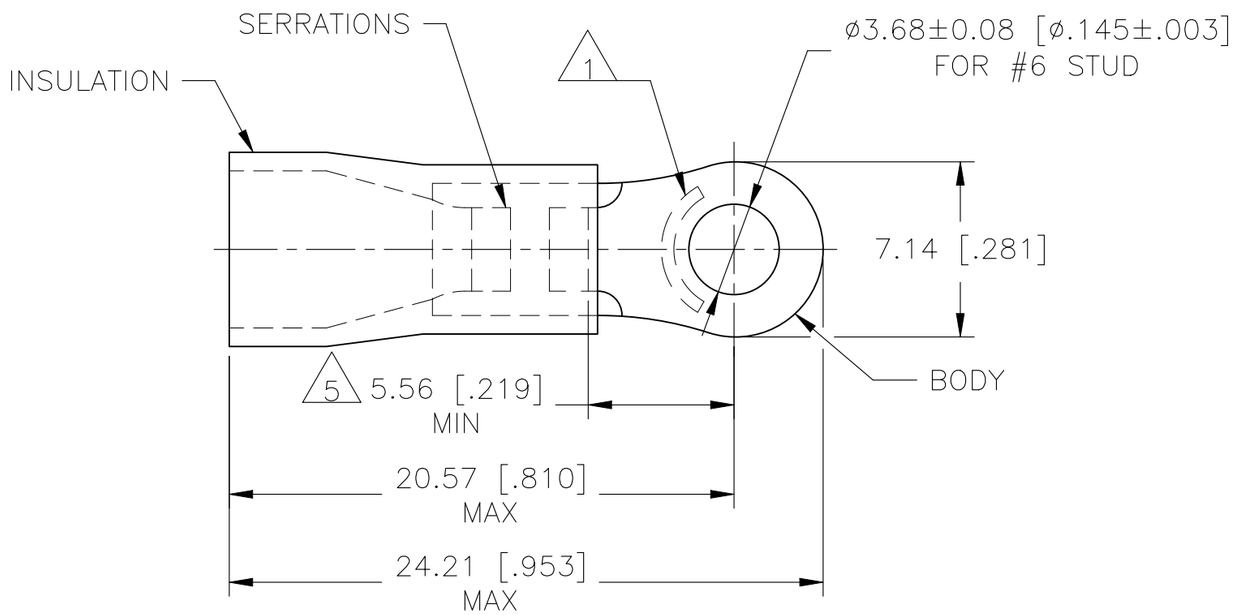

1. STAMP AMP 12-10* APPROX AS SHOWN.
2. WIRE INSULATION DIA: ø3.81-6.35 [ø.150-.250].
3. TONGUE MATERIAL THK: $0.99^{\pm 0.05}$ [$.039^{\pm .002}$].
4. MATERIAL: BODY – CU PER ASTM B152
   SLEEVE – PVC, COLOR – YELLOW.
5. APPLIES FROM EDGE OF METAL WIRE BARREL TO CENTER OF STUD HOLE.

QTY.	PACKAGE TYPE	PART NUMBER
50	LOOSE PC,BOX	8-34852-2
1 KIT = 100 PIECES	LOOSE PIECE	6-34852-0
2000	ON TAPE, REEL	2-34852-1
500	LOOSE PIECE	34852

AMP INCORPORATED
CUSTOMER SERVICE SYSTEMS

FOR ADDITIONAL PRODUCT INFORMATION OR COPIES OF DRAWINGS AND TECHNICAL DOCUMENTS	PRODUCT INFORMATION CENTER 1-800-522-6752
FOR APPLICATION TOOLING INFORMATION	TOOLING ASSISTANCE CENTER 1-800-722-1111
FOR ORDER ENTRY	1-800-526-5142

MAX RECOMMENDED OPERATING TEMPERATURE: 105°C [221°F]

VOLTAGE RATING: 600 V MAX. FOR BUILDING WIRE 1000 V FOR FIXTURES & SIGNS

CIRCULAR MIL AREA: 2.62-6.64mm² [5,180-13,100] SOLID OR STRANDED

THIS DRAWING IS A CONTROLLED DOCUMENT.

DIMENSIONS: mm [INCHES]

TOLERANCES UNLESS OTHERWISE SPECIFIED:
0 PLC ± –
1 PLC ± –
2 PLC ± 0.20[.008]
3 PLC ± –
4 PLC ± –
ANGLES ± –

MATERIAL 4

FINISH TIN PER ASTM B545

DWN	DK SCHRUM	08/06/92
CHK	RE HERSEY	11/10/92
APVD	M BARNABA	11/10/92
PRODUCT SPEC	—	
APPLICATION SPEC	114-2161	
WEIGHT	—	

TE Connectivity

NAME: TERMINAL, RING TONGUE, PLASTI-GRIP, WIRE SIZE: 12-10 AWG

SIZE	CAGE CODE	DRAWING NO	RESTRICTED TO
A3	00779	C-34852	—

CUSTOMER DRAWING | SCALE 4:1 | SHEET 1 OF 1 | REV P5

1470-19 (1/15)