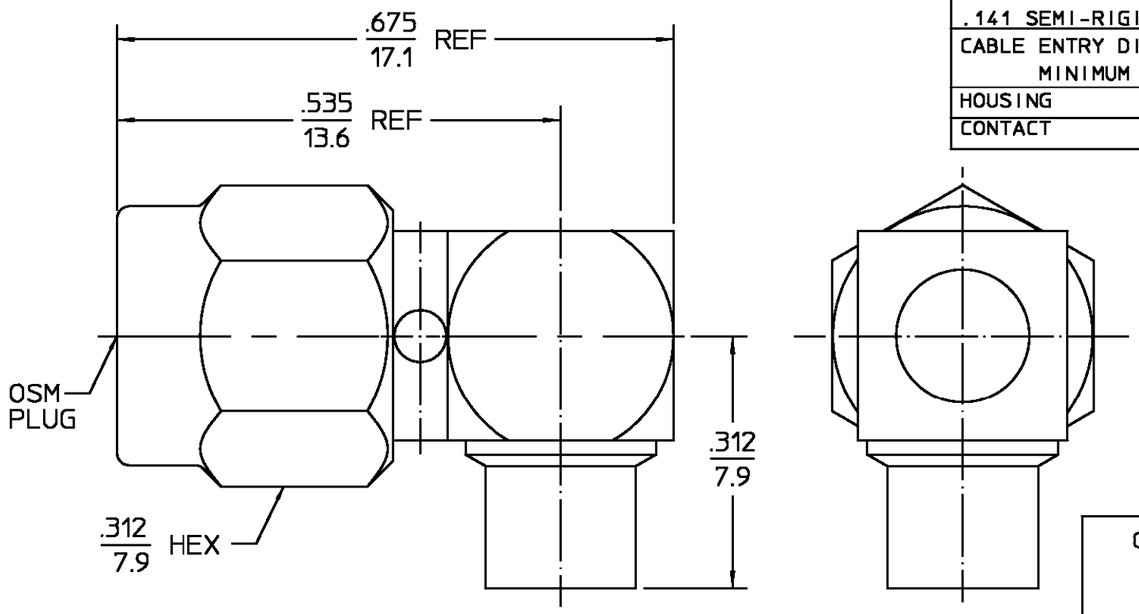

DESIGNED FOR USE WITH .141 SEMI-RIGID CABLE	
CABLE ENTRY DIAMETER MINIMUM	
HOUSING	.144
CONTACT	.037

REVISIONS

REV	DESCRIPTION	DATE	APPROVED
01_3	REVISED	4-12-95	

ELECTRICAL	MECHANICAL	ENVIRONMENTAL
Nominal Impedance (Ohms) 50	Interface Dimensions MIL-STD-348A, Fig. 310.1	Temperature Rating -65°C to +165°C
Frequency Range (GHz) DC to 18	Recommended Mating Torque 7-10 in-lbs	Vibration MIL-STD-202, Method 204, Condition D.
Volt Rating (VRMS MAX) @ Sea Level 335	Mating Characteristics: Insertion (MAX Lbs) 3.0	Shock MIL-STD-202, Method 213, Condition I.
VSWR 1.10 +.01 f (GHz)	Withdrawal (MIN Oz) 1.0	Thermal Shock MIL-STD-202, Method 107, Condition B, Except High Temp +115°C
Insertion Loss (dB MAX) $.05\sqrt{f(GHz)}$	Force to Engage and Disengage (In-Lbs MAX) 2.0	Moisture Resistance MIL-STD-202, Method 106
RF Leakage (dB MIN) [-90-f(GHz)]	Center Contact Captivation Axial (Lbs) 6.0	Corrosion - MIL-STD-202, Method 101, Condition B, 5% salt spray
Corona, 70,000 Ft (VRMS MIN) 250	Radial (In-Oz) N/A	
Dielectric Withstanding Voltage (VRMS MIN) @ Sea Level 1,500	Cable Retention Axial Force (Lbs MIN) 60	.XXX = in
Contact Resistance (Milliohms MAX) Center Contact 2.0	Torque (In-Oz) 55	XX.X = mm
Outer Contact 2.0	Weight (Grams) TBD	
Cable to Housing 0.5		
RF High Potential @ Sea Level (VRMS MIN @ 5 MHz) 1,000		
I.R.(Megohms MIN) 10,000		

COMPONENT	MATERIAL	FINISH
COUPLING NUT	STAINLESS STEEL PER ASTM-A484 AND ASTM-A582, TYPE 303	PASSIVATE PER QQ-P-35
HOUSING CAP	STAINLESS STEEL PER ASTM-A484 AND ASTM-A582, TYPE 303	GOLD PLATE PER MIL-G-45204
DIELECTRIC	TFE FLUOROCARBON PER ASTM-D-1457	N/A
CENTER CONTACT	BERYLLIUM COPPER PER ASTM-B-196 OR ASTM-B-197 ALLOY C17300, CONDITION H	GOLD PLATE PER MIL-G-45204
RETAINING RING	BERYLLIUM COPPER PER ASTM-B-194, ALLOY C17200, CONDITION H	N/A
GASKET	SILICONE RUBBER PER ZZ-R-765	N/A

UNLESS OTHERWISE SPECIFIED DIMENSIONS ARE IN INCHES
TOLERANCE ON
FRAC. ± 1/64 DEC. ±.005 ANGLES ± 1°

DRAWN BY R.B.G.	DATE 11-20-76	
CHECKED BY E.C.A.	11-22-76	
APP'D BY R.M.F.	12-1-76	

AMP

AMP Incorporated
140 Fourth Avenue
Waltham, MA 02451-7599

These drawings and specifications are the property of Omni Spectra Incorporated and shall not be reproduced or copied or used in whole or in part as the basis for the manufacture or sale of item(s) without written permission.

USE ASS'Y PROCEDURE

408-04830
NO. A.P. (20-017)

TITLE OSM HIGH FREQUENCY RIGHT ANGLE CABLE PLUG DIRECT SOLDER

SIZE	CODE IDENT NO.		REV
B	26805	2007-5054-02	01_3

SCALE 5 : 1 SHEET 1 OF 1

CUSTOMER DRAWING

AMP PART # 1051110-1
SHEET 1 OF 1 REV A