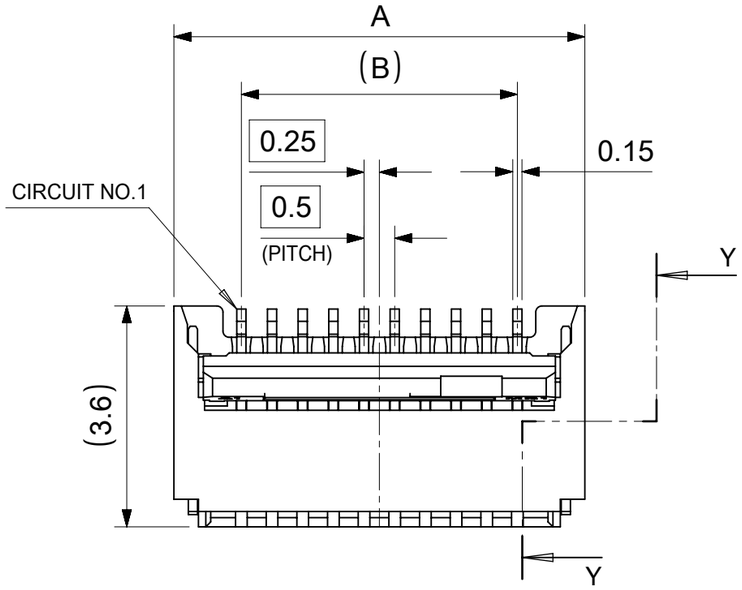

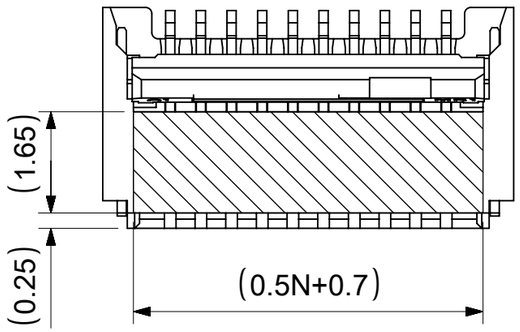

PICK-UP AREA(REF.) N:CIRCUITS

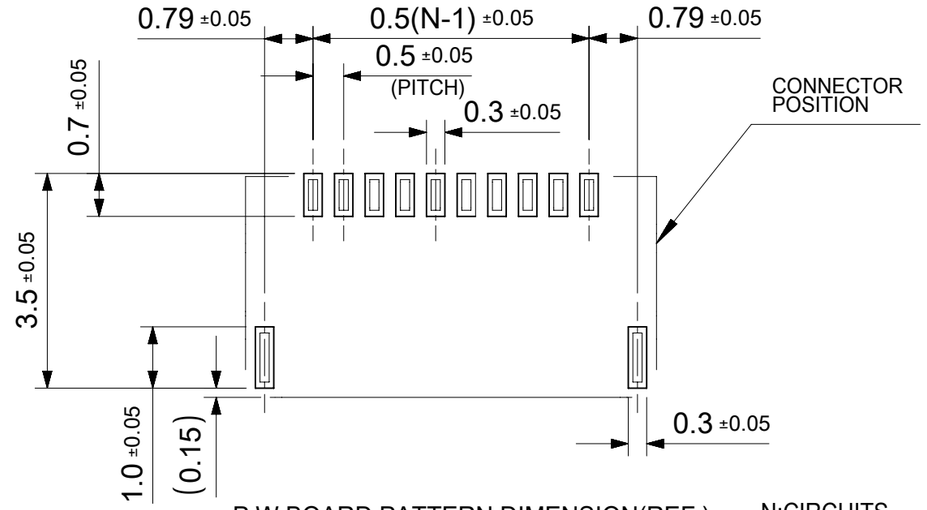

P.W.BOARD PATTERN DIMENSION(REF.) (MOUNT AREA) N:CIRCUITS

METAL MASK THICKNESS : 0.1mm
OPENING AREA : TERM.(0.7X0.3)
NAIL(1.0X0.3)

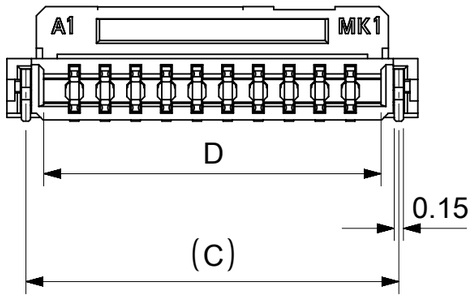

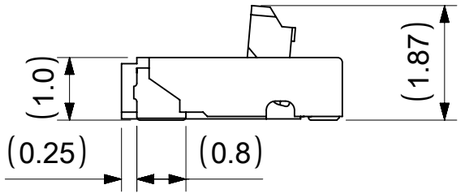

ACTUATOR OPEN CONDITION

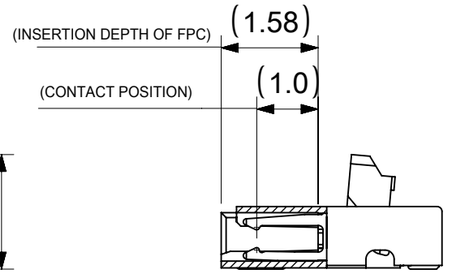

SECTION Y-Y

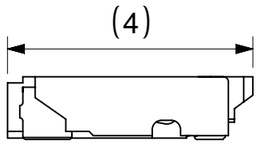

ACTUATOR CLOSED CONDITION

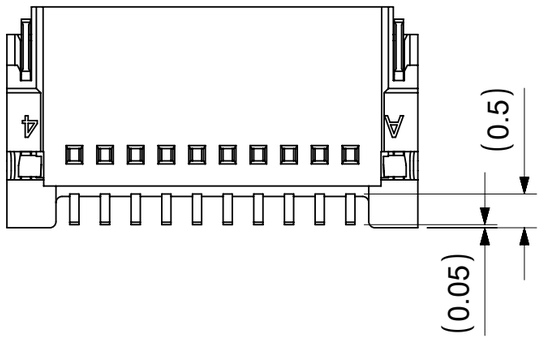

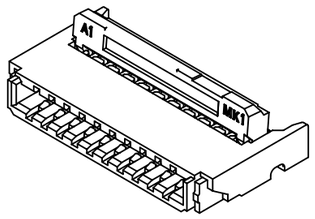

20.5	21.08	19.5	21.7	503480-4000	40
19.5	20.08	18.5	20.7	503480-3800	38
18.5	19.08	17.5	19.7	503480-3600	36
17.5	18.08	16.5	18.7	503480-3400	34
16.5	17.08	15.5	17.7	503480-3200	32
15.5	16.08	14.5	16.7	503480-3000	30
14.5	15.08	13.5	15.7	503480-2800	28
13.5	14.08	12.5	14.7	503480-2600	26
12.5	13.08	11.5	13.7	503480-2400	24
11.5	12.08	10.5	12.7	503480-2200	22
10.5	11.08	9.5	11.7	503480-2000	20
9.5	10.08	8.5	10.7	503480-1800	18
9.0	9.58	8.0	10.2	503480-1700	17
8.5	9.08	7.5	9.7	503480-1600	16
7.5	8.08	6.5	8.7	503480-1400	14
6.5	7.08	5.5	7.7	503480-1200	12
5.5	6.08	4.5	6.7	503480-1000	10
4.5	5.08	3.5	5.7	503480-0800	8
3.5	4.08	2.5	4.7	503480-0600	6
D	C	B	A	EMBOSSED PACKAGE ORDER NO.	CIRCUIT

CONNECTOR SERIES No. 503480-**09

THIS DRAWING CONTAINS INFORMATION THAT IS PROPRIETARY TO MOLEX ELECTRONIC TECHNOLOGIES, LLC AND SHOULD NOT BE USED WITHOUT WRITTEN PERMISSION

DIMENSION UNITS	SCALE
mm	1:1

GENERAL TOLERANCES (UNLESS SPECIFIED)

ANGULAR TOL	±	1.0 °
4 PLACES	±	0.2
3 PLACES	±	0.2
2 PLACES	±	0.2
1 PLACE	±	0.2
0 PLACES	±	0.2

DRAFT WHERE APPLICABLE MUST REMAIN WITHIN DIMENSIONS

CURRENT REV DESC: REMOVED OBSOLETED PART NUMBERS AS PER PCN#513389.

EC NO: 781755
DRWN: RAVINR1 2024/03/11
CHK'D: GGA 2024/04/10
APPR: GGA 2024/04/10

INITIAL REVISION:
DRWN: THIRAYAMA 2009/12/11
APPR: KMORIKAWA 2009/12/14

THIRD ANGLE PROJECTION | DRAWING: A3-SIZE | SERIES: 503480

molex

0.5 FPC CONN. E/O
BACKFLIP H=1.0MM ASSEMBLY

PRODUCT CUSTOMER DRAWING

DOCUMENT NUMBER	DOC TYPE	DOC PART	REVISION
SD-503480-001	PSD	001	J1

MATERIAL NUMBER	CUSTOMER	SHEET NUMBER
SEE TABLE	GENERAL MARKET	1 OF 2

DOCUMENT STATUS	P1	RELEASE DATE	2024/04/10 10:13:32

FORMAT: master-tb-prod-A3
REVISION: J1
DATE: 2021/05/01

NOTES

1. PART COMPOSITION

HOUSING MATERIAL:LIQUID CRYSTAL POLYMER(LCP), GLASS FILLED, UL94V-0, NATURAL(WHITE)

TERMINAL MATERIAL:PHOSPOHR BRONZE

CONTACT AREA : SEPARATED GOLD PLATING (0.1 MICROMETER MINIMUM)
SOLDER TAIL AREA : SEPARATED GOLD PLATING
UNDERPLATE : NICKEL OVERALL (1.0 MICROMETER MINIMUM)

ACTUATOR MATERIAL : POLYAMIDE(PA), GLASS FILLED, UL94 HB, BLACK

NAIL MATERIAL:PHOSPOHR BRONZE

SOLDER TAIL AREA : TIN OVERALL(1.0 MICROMETER MINIMUM)
UNDERPLATE : NICKEL OVERALL(1.0 MICROMETER MINIMUM)

2 . PLEASE DO NOT OPERATE THE ACTUATOR BEFORE MOUNTING.

3. PLEASE OPERATE THE ACTUATOR AFTER INSERTING THE FPC INTO THE CONNECTOR.

4. ABOUT FPC
RECOMMENDED STIFFENER MATERIAL: POLYIMIDE
RECOMMENDED BASE FILM THICKNESS: 25 MICROMETER
RECOMMENDED ADHESIVE: THERMOSETTING ADHESIVE
NOTE: PLEASE PUT APPROPRIATE AMOUNT OF ADHESIVE ON ADHEREND BECAUSE THERE IS A POSSIBILITY THAT THE EXTRA ADHESIVE CAUSES THE DEFECT IN ELECTRICAL CONTINUITY.

RECOMMENDED PUNCHER DIRECTION:
FROM CONDUCTOR SIDE TO STIFFENER FILM SIDE.
RECOMMENDED CONDUCTOR SPECIFICATION:
THICKNESS OF SOFT COPPER FOIL: 35MICROMETER

5 R0.3 MUST NOT BE OVERLAPPED TO PATTERN OF FPC.

6. COPLANARITY : 0.1 MAXIMUM

7. PLEASE RECOGNIZE A POSSIBILITY TO CHANGE THE SHAPE OF THE PART THAT DOES NOT OBSTRUCT A FUNCTION, BY CIRCUMSTANCES IN OUR PRODUCTION.

8. THIS PRODUCT IS DELIVERED WITH THE ACTUATOR IN THE OPEN POSITION.

9. THIS PRODUCT IS DUAL-CONTACT (TOP- AND BOTTOM-CONTACTS) TYPE CONNECTOR.

10 PLEASE CONFIRM TO INSERT FPC IN ADVANCE WHEN FPC WIDTH IS OVER 0.5(N+1)+0.02.

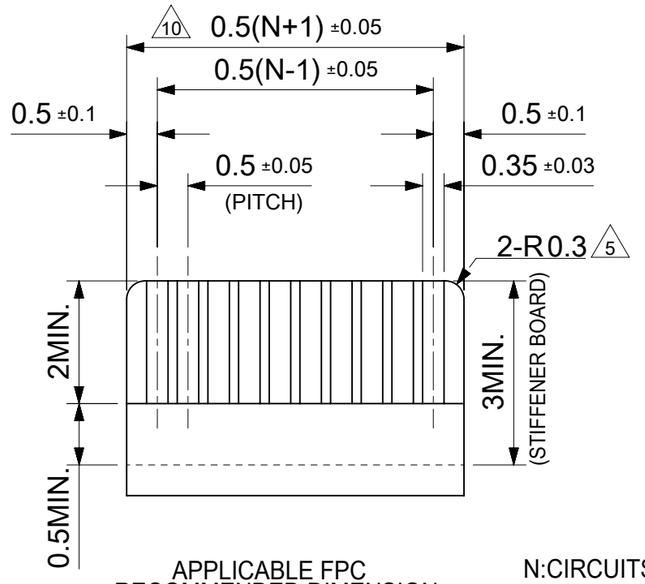

APPLICABLE FPC RECOMMENDED DIMENSION

N:CIRCUITS

(THICKNESS : 0.3±0.05) : 30 OR LESS CIRCUITS
(THICKNESS : 0.3±0.03) : 31 OR OVER CIRCUITS

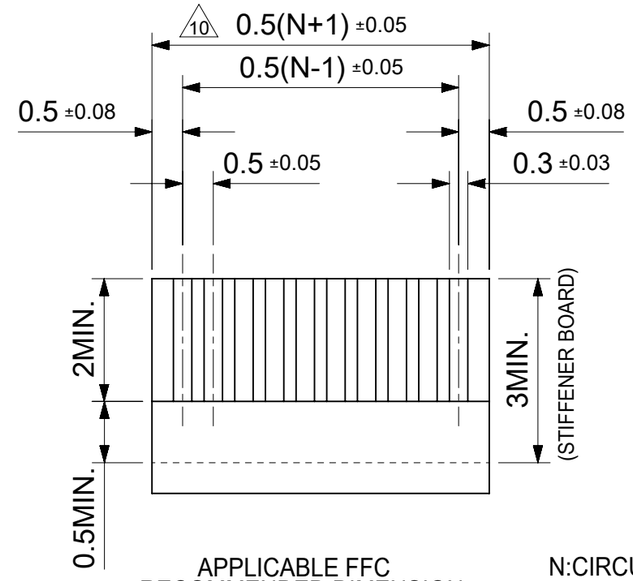

APPLICABLE FFC RECOMMENDED DIMENSION

N:CIRCUITS

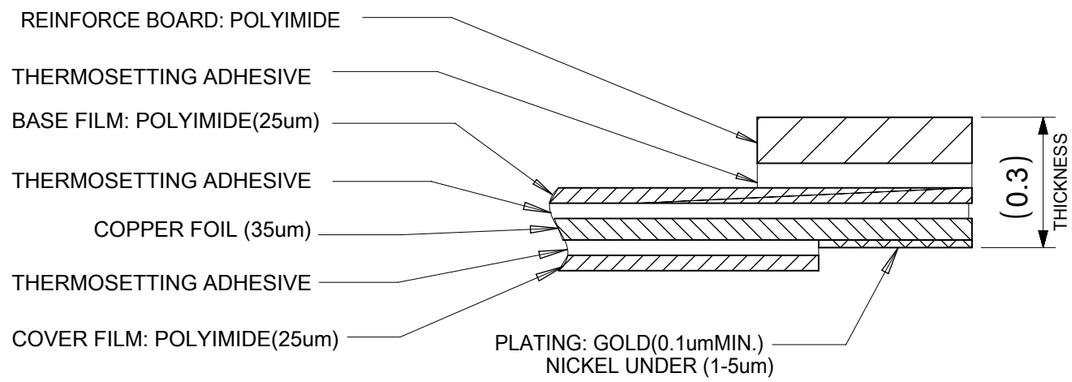

STRUCTURE OF FPC

THIS DRAWING CONTAINS INFORMATION THAT IS PROPRIETARY TO MOLEX ELECTRONIC TECHNOLOGIES, LLC AND SHOULD NOT BE USED WITHOUT WRITTEN PERMISSION

DIMENSION UNITS	SCALE
mm	1:1

GENERAL TOLERANCES (UNLESS SPECIFIED)

ANGULAR TOL	±	1.0 °
4 PLACES	±	0.2
3 PLACES	±	0.2
2 PLACES	±	0.2
1 PLACE	±	0.2
0 PLACES	±	0.2

DRAFT WHERE APPLICABLE MUST REMAIN WITHIN DIMENSIONS

CURRENT REV DESC: REMOVED OBSOLETED PART NUMBERS AS PER PCN#513389.

EC NO: 781755
DRWN: RAVINR1 2024/03/11
CHK'D: GGA 2024/04/10
APPR: GGA 2024/04/10

INITIAL REVISION:
DRWN: THIRAYAMA 2009/12/11
APPR: KMORIKAWA 2009/12/14

THIRD ANGLE PROJECTION

DRAWING: A3-SIZE
SERIES: 503480

molex

0.5 FPC CONN. E/O
BACKFLIP H=1.0MM ASSEMBLY

PRODUCT CUSTOMER DRAWING

DOCUMENT NUMBER	DOC TYPE	DOC PART	REVISION
SD-503480-001	PSD	001	J1

MATERIAL NUMBER	CUSTOMER	SHEET NUMBER
SEE TABLE	GENERAL MARKET	2 OF 2

DOCUMENT STATUS	P1	RELEASE DATE	2024/04/10 10:13:32

FORMAT: master-tb-prod-A3
REVISION: J1
DATE: 2021/05/01

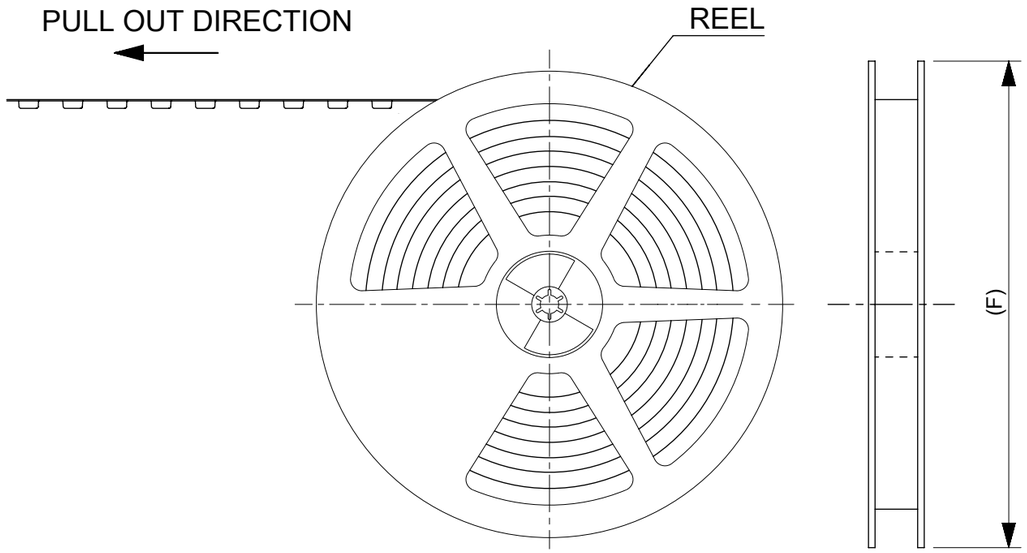

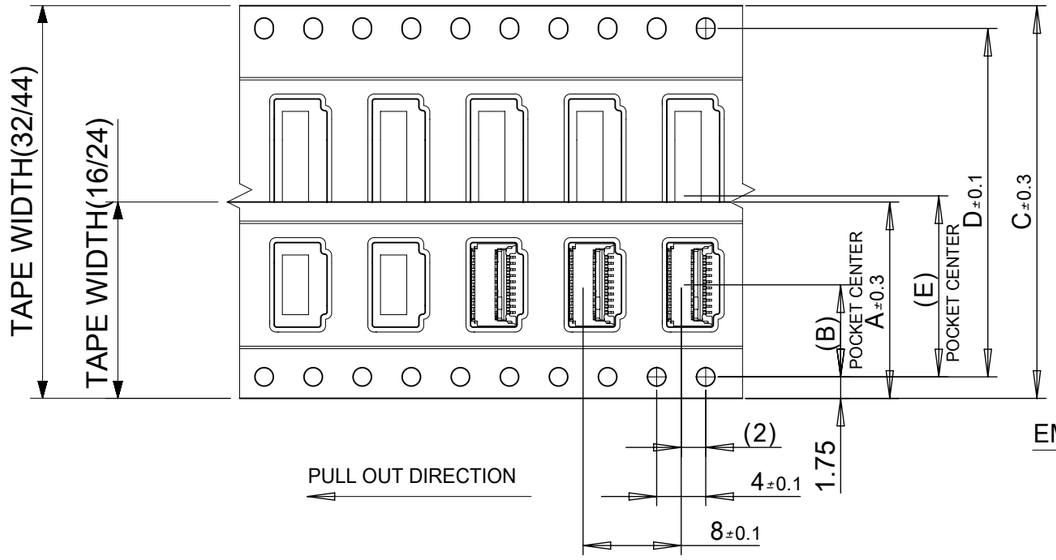

DIRECTION OF CONNECTOR IN EMBOSSED TAPE

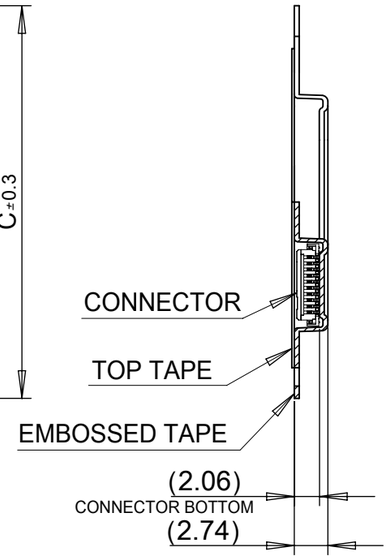

NOTES

1. IN THE PACKAGE, PART NO.503480-**09 DETAILED DIMENSIONS.
   REFER TO SD-503480-001

2. NUMBER OF CONNECTORS : REFER TO TABLE

3. LEAD TAPE LENGTH

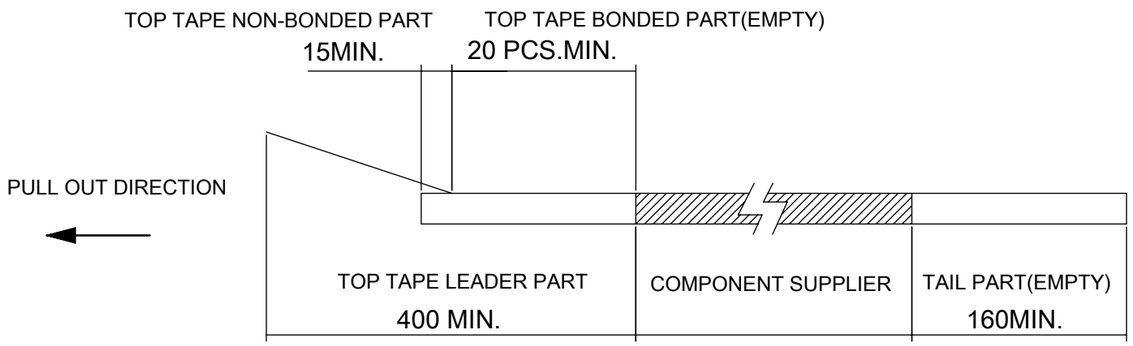

4. MATERIAL
   CARRIER TAPE : PET
   TOP TAPE : PET,OTHER
   REEL : PS (RECYCLE MATERIAL CONTAINED)

5. COVER TAPE PEEL FORCE IS DEFINED BY IEC60286-3.

NUMBER OF CONNECTORS	F	E	D	C	B	A	TAPE WIDTH	ORDER NO.	CIRCUIT
4500 PCS	380	20.2	40.4	44	-	-	44	503480-4000	40
								503480-3800	38
								503480-3600	36
3000 PCS	330	14.2	28.4	32			32	503480-3400	34
								503480-3200	32
								503480-3000	30
4500 PCS	380	-	-	-	11.5	24	24	503480-2800	28
3000 PCS	330							503480-2600	26
								503480-2400	24
								503480-2200	22
								503480-2000	20
								503480-1800	18
								503480-1700	17
								503480-1600	16
								503480-1400	14
		-	-	-	7.5	16	16	503480-1200	12
								503480-1000	10
								503480-0800	8
								503480-0600	6

THIS DRAWING CONTAINS INFORMATION THAT IS PROPRIETARY TO MOLEX ELECTRONIC TECHNOLOGIES, LLC AND SHOULD NOT BE USED WITHOUT WRITTEN PERMISSION

DIMENSION UNITS	SCALE
mm	NTS

GENERAL TOLERANCES (UNLESS SPECIFIED)

ANGULAR TOL ± 3.0 °

4 PLACES	±
3 PLACES	±
2 PLACES	±
1 PLACE	±
0 PLACES	±

10 UNDER : ±0.20
10 OVER 30 UNDER : ±0.25
30 OVER : ±0.30

DRAFT WHERE APPLICABLE MUST REMAIN WITHIN DIMENSIONS

CURRENT REV DESC:

EC NO: 801777
DRWN: KYHWANG 2024/10/04
CHK'D: SMARUYAMA 2025/04/08
APPR: YNAITO 2025/04/16

INITIAL REVISION:
DRWN: THIRAYAMA 2009/12/11
APPR: KMORIKAWA 2009/12/14

THIRD ANGLE PROJECTION | DRAWING: A3-SIZE | SERIES: 503480

molex

0.5 FPC CONN. E/O
EMBOSSED TAPE PACKAGE

PRODUCT CUSTOMER DRAWING

DOCUMENT NUMBER	DOC TYPE	DOC PART	REVISION
SD-503480-002	PSD	001	F

MATERIAL NUMBER	CUSTOMER	SHEET NUMBER
SEE TABLE	GENERAL MARKET	1 OF 1

DOCUMENT STATUS	P1	RELEASE DATE	2025/04/16 04:19:42

FORMAT: master-tb-prod-A3
REVISION: J1
DATE: 2021/05/01