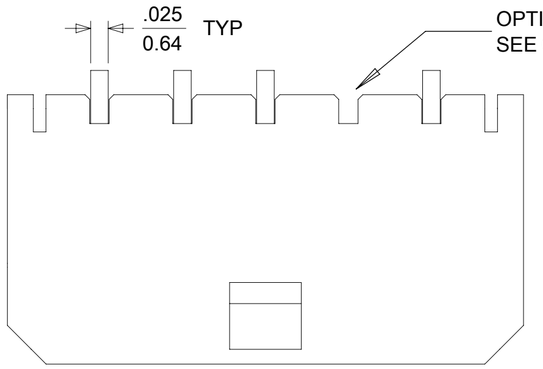

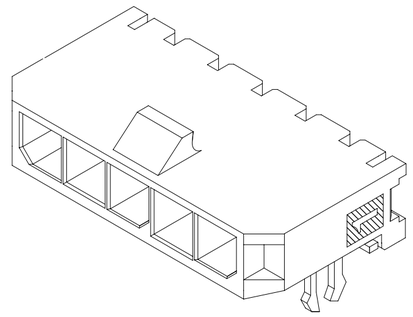

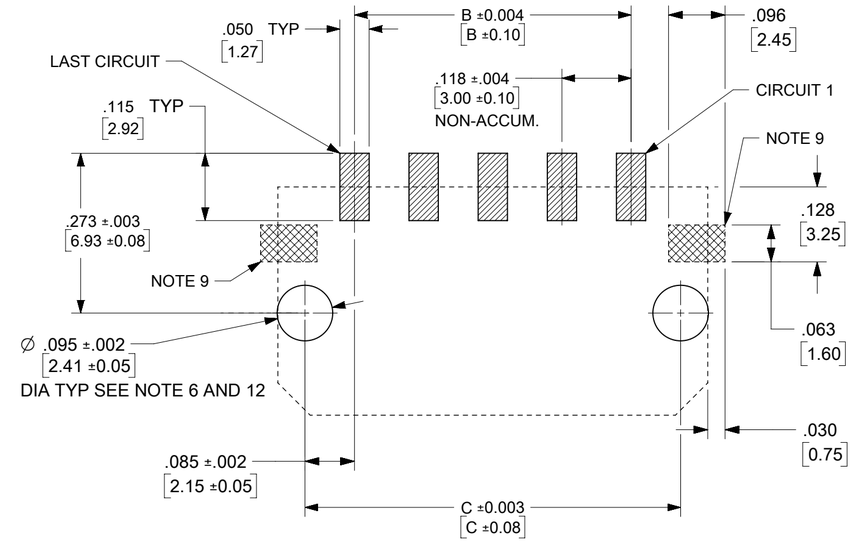

PCB LAYOUT: COMPONENT SIDE
RECOMMENDED PCB THICKNESS: .062/1.57

CKTS	DIM A	DIM B	DIM C
2	.380 / 9.65	.118 / 3.00	.287 / 7.30
3	.498 / 12.65	.236 / 6.00	.405 / 10.30
4	.616 / 15.65	.354 / 9.00	.524 / 13.30
5	.734 / 18.64	.472 / 12.00	.642 / 16.30
6	.852 / 21.64	.591 / 15.00	.760 / 19.30
7	.970 / 24.64	.709 / 18.00	.878 / 22.30
8	1.088 / 27.64	.827 / 21.00	.996 / 25.30
9	1.206 / 30.63	.945 / 24.00	1.114 / 28.30
10	1.325 / 33.66	1.063 / 27.00	1.232 / 31.30
11	1.443 / 36.65	1.181 / 30.00	1.350 / 34.30
12	1.561 / 39.65	1.299 / 33.00	1.469 / 37.30

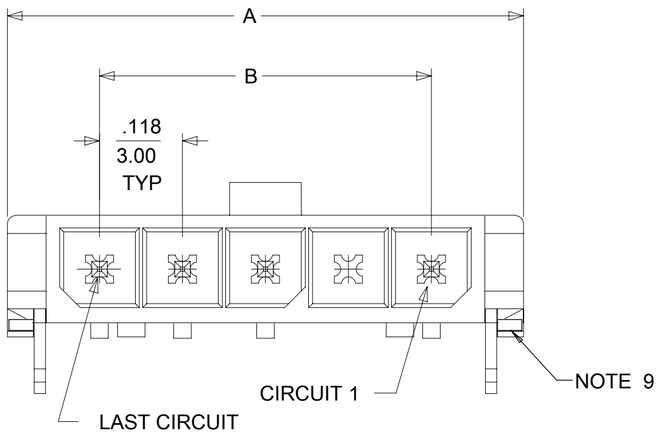

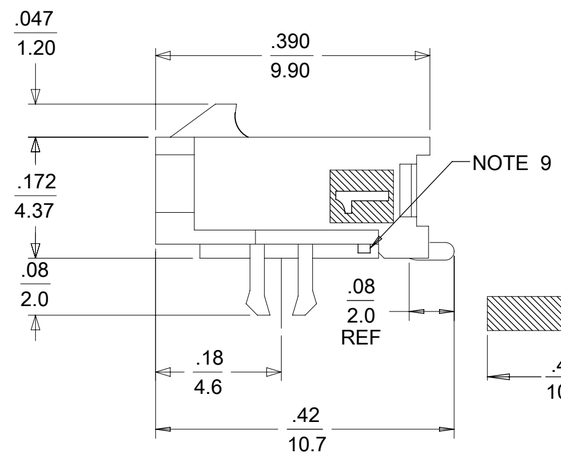

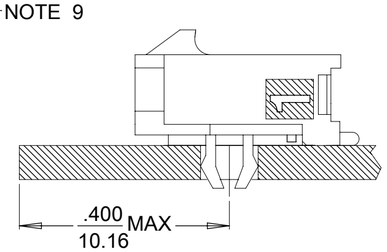

LOCATION DETAIL
SEE NOTE 8

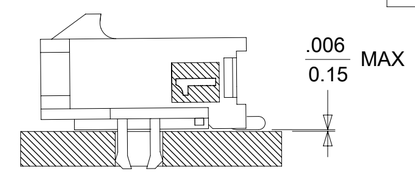

COPLANARITY DETAIL
SEE NOTE 7

RECEPTACLE #43645

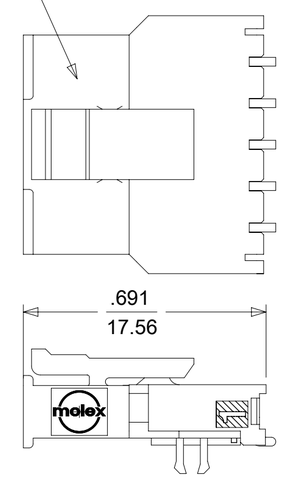

MATED MICRO FIT CONNECTORS

NOTES:

1. HOUSING MATERIAL: LIQUID CRYSTAL POLYMER, GLASS FILLED, UL94V-0, COLOR: BLACK
   TERMINAL MATERIAL: BRASS ALLOY
2. FINISH:
   A = .000060/(0.00152) MIN. REFLOWED MATTE TIN OVER .000050/(0.00127) MIN. NICKEL
   (FINISH IS BRIGHT IN APPEARANCE, THICKNESS AS APPLIED PRIOR TO REFLOW)
   B = .000015/(0.00038) MIN. SELECT GOLD IN CONTACT AREA .000100/(0.00254) MIN. SELECT MATTE TIN ON SOLDER TAILS BOTH OVER .000050/(0.00127) NICKEL OVERALL
   C = .000030/(0.00076) MIN. SELECT GOLD IN CONTACT AREA .000100/(0.00254) MIN. SELECT MATTE TIN ON SOLDER TAILS BOTH OVER .000050/(0.00127) NICKEL OVERALL
3. PRODUCT SPECIFICATION: PS-43650
4. TAPE & REEL PACKAGED PER MOLEX DRAWING 436500001-PK
5. MATES WITH: RECEPTACLE NUMBER 43645
6. TO MINIMIZE INSERTION FORCE ON MOUNTING CLIPS DURING ROBOTIC PLACEMENT, HOLE DIAMETER SPECIFICATIONS MUST BE INCREASED MAKING THEM MORE COMPATIBLE WITH PICK AND PLACE EQUIPMENT. HOLE DIAMETERS SHOULD BE INCREASED TO APPROXIMATELY .100±.002/(2.54±0.05) AND EVALUATED PER PLACEMENT EQUIPMENT.
7. THE COPLANARITY DIMENSION IS ESTABLISHED BY PLACING THE ASSEMBLY ON A FLAT SURFACE. THE DISTANCE FROM THAT SURFACE TO THE BOTTOM OF ANY ANY TERMINAL MUST NOT EXCEED .006/0.15
8. TO AVOID INTERFERENCE BETWEEN RECEPTACLE AND PCB, HEADER MUST BE PLACED WITHIN .400/(10.16) MAX. FROM EDGE OF PCB, AS SHOWN IN LOCATION DETAIL.
9. METAL TAB MAY BE FLUSH WITH PCB. NO EXPOSED TRACES OR VIAS ALLOWED NEAR THESE AREAS.
10. PARTS CONFORM TO CLASS 'B' REQUIREMENTS OF COSMETIC SPECIFICATION PS-45499-002.
11. TEXT ON PART IS FOR REFERENCE ONLY. TEXT AND TEXT LOCATION MAY VARY DEPENDING ON PART NUMBER AND/OR TOOL.
12. HOLES FOR CLIPS SHOULD BE PTH AND CLIPS SHOULD BE SOLDERED FOR BEST RETENTION TO PCB.

	FINISH A	FINISH B		FINISH C	
CKTS	MATERIAL NO:	MATERIAL NO:	VOID CKT	MATERIAL NO:	VOID CKT
02	43650-0209	43650-0210		43650-0211	
03	43650-0309	43650-0310		43650-0311	
04	43650-0409	43650-0410		43650-0411	
05	43650-0509	43650-0510		43650-0511	
06	43650-0609	43650-0610		43650-0611	
07	43650-0709	43650-0710		43650-0711	
08	43650-0809	43650-0810		43650-0811	
09	43650-0909	43650-0910		43650-0911	
10	43650-1009	43650-1010		43650-1011	
11	43650-1109	43650-1110		43650-1111	
12	43650-1209	43650-1210		43650-1211	
03				43650-1311	02
04		43650-1410	02		

THIS DRAWING CONTAINS INFORMATION THAT IS PROPRIETARY TO MOLEX ELECTRONIC TECHNOLOGIES, LLC AND SHOULD NOT BE USED WITHOUT WRITTEN PERMISSION

FUNCTIONAL SYMBOLS: FA = 0, FC = 0, FP = 0
DIVISIONAL SYMBOLS

DIMENSION UNITS: INCH/MM
SCALE: NTS

GENERAL TOLERANCES (UNLESS SPECIFIED)

	MM	INCH
4 PLACES	±	±
3 PLACES	±	± 0.01
2 PLACES	± 0.25	± 0.014
1 PLACE	± 0.36	±
0 PLACES	±	±
ANGULAR TOL	± 0.5 °	

DRAFT WHERE APPLICABLE MUST REMAIN WITHIN DIMENSIONS

CURRENT REV DESC: CORRECT INCH/MM DIMENSIONS IN PCB LAYOUT

EC NO: 739185
DRWN: MKIPPER 2023/02/17
CHK'D: MKIPPER 2023/02/17
APPR: FSMITH 2023/02/17

INITIAL REVISION:
DRWN: SAMIEC 2000/07/07
APPR: FSMITH 2016/03/18

THIRD ANGLE PROJECTION
DRAWING: C-SIZE
SERIES: 43650

molex

MICRO FIT (3.0) RIGHT ANGLE SMT CLIPS
SINGLE ROW / TAPE AND REEL

PRODUCT CUSTOMER DRAWING

DOCUMENT NUMBER	DOC TYPE	DOC PART	REVISION
SD-43650-004	PSD	000	E4

MATERIAL NUMBER	CUSTOMER	SHEET NUMBER
SEE CHART	GENERAL MARKET	1 OF 1

DOCUMENT STATUS	P1	RELEASE DATE	2023/02/17 17:01:09

FORMAT: Eng-lega-master-lb-prod-C
REVISION: E1
DATE: 2021/05/01