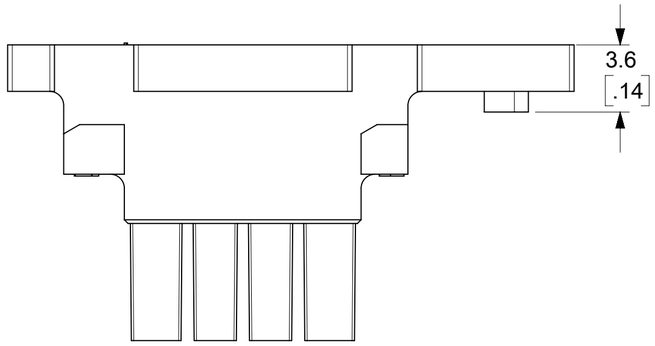

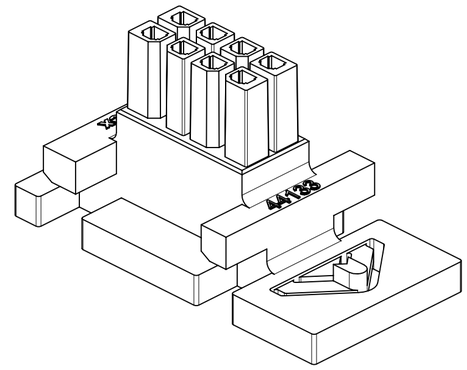

NOTE	CIRCUIT SIZE	MATERIAL NUMBER	DIM "A"	DIM "B"
	4	44133-0411	24.7 / .97	3.00 / .118
	6		27.8 / 1.09	6.00 / .236
	8		30.8 / 1.21	9.00 / .354
	10	44133-1011	33.8 / 1.33	12.00 / .472
	12		36.8 / 1.45	15.00 / .591
	14		39.9 / 1.57	18.00 / .709
	16		42.9 / 1.69	21.00 / .827
	18		45.9 / 1.81	24.00 / .945
	20		48.9 / 1.93	27.00 / 1.063
	22		51.9 / 2.04	30.00 / 1.181
	24		54.9 / 2.16	33.00 / 1.299

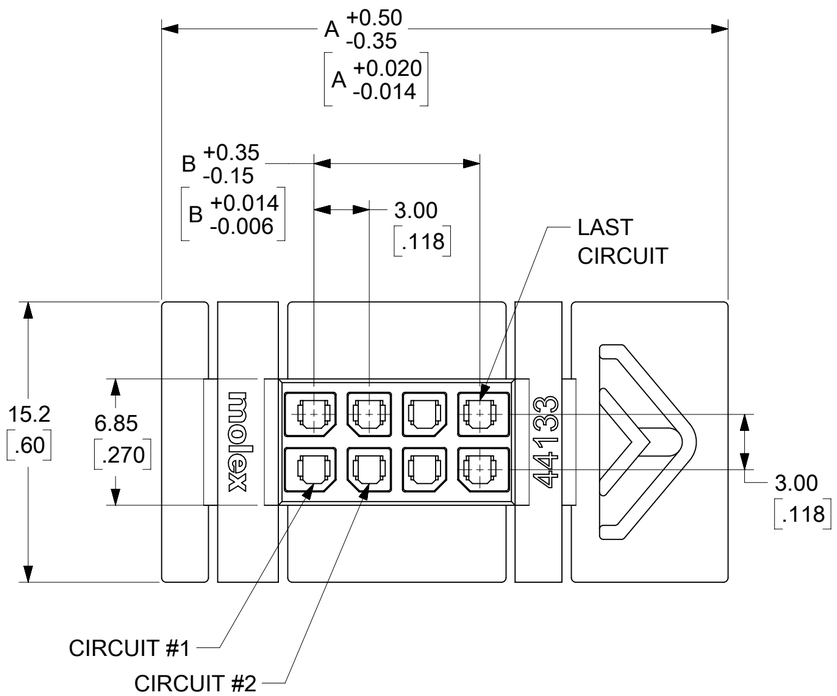

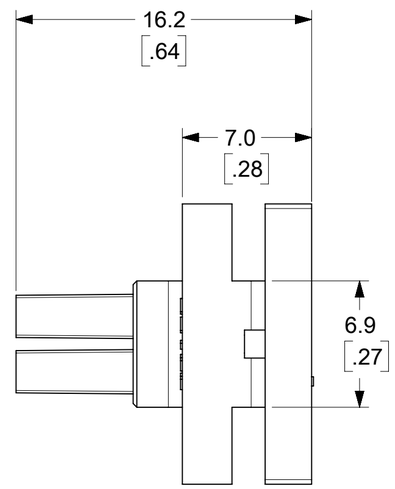

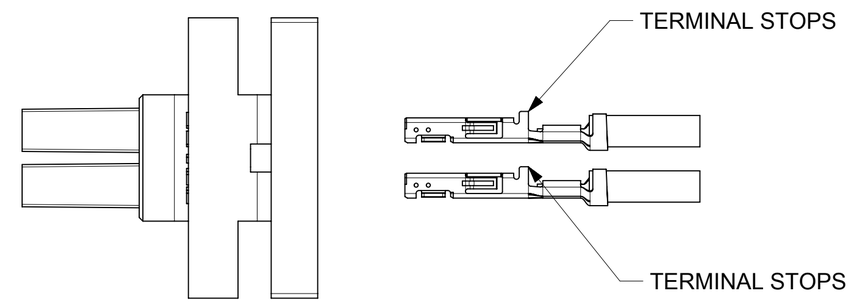

TERMINAL INSERTION ORIENTATION

NOTES:
1. MATERIAL: UNFILLED NYLON, UL94V-0, IEC 60335-1 GLOW WIRE CAPABLE, COLOR: BLACK
2. FINISH: N/A
3. PRODUCT SPECIFICATION: PS-44300-001
4. PACKAGING SPECIFICATION: TRAY PACKED PER PK-44133-002
5. THIS RECEPTACLE MATES WITH MOLEX BMI PLUG 44300, MOLEX BMI VERTICAL PCB HEADER 44432, MOLEX BMI RIGHT ANGLE PCB HEADER 44428, & MOLEX BMI CPI VERTICAL PCB HEADER 45280.
6. THIS RECEPTACLE TO BE USED WITH MOLEX FEMALE CRIMP TERMINALS ONLY (SERIES 43030, 45773, OR 46235). SEE APPLICATION SPECIFICATION AS-44133-001 FOR TERMINAL ORIENTATION IN HOUSING.
7. THIS RECEPTACLE IS DESIGNED FOR USE WITH .062/1.57 MAX. TO .050/1.27 MINIMUM THICK PANELS.
8. DIMENSIONS GIVEN ACROSS CENTERLINES ARE SYMMETRICAL ABOUT THOSE CENTERLINES WITHIN HALF THE TOTAL TOLERANCE.
9. WHEN MATING WITH 44300 SERIES, THE PANEL CUT-OUT CENTERLINES OF DIM "H" AND .385/9.78 MUST ALIGN WITH POINT "M" DEFINED BY 44300 SERIES DRAWING.
10. MOLEX RECOMMENDS THE USE OF MICRO-FIT TEST PLUG (SERIES 44242) WHENEVER CONTINUITY TESTING IS PERFORMED. TEST PLUGS MUST NOT BE USED TO MAKE OR BREAK UNDER LOAD. MOLEX DOES NOT RECOMMEND USING STANDARD MATING COMPONENTS (SERIES 44428, 44432, 44300 OR 45280) FOR HARNESS TESTING PURPOSES.
11. PART CONFORMS TO CLASS 'B' REQUIREMENTS OF COSMETIC SPECIFICATION PS-45499-002. SOME HOUSINGS MAY HAVE A SMALL GATE BLEMISH NEAR THE GATE LOCATION THAT DOES NOT AFFECT FUNCTIONALITY. HOUSINGS MAY EXHIBIT A SURFACE IMPERFECTION KNOW AS "SINK MARKS" UP TO .024/(0.60) MAX. THIS IS A COSMETIC DEFECT AND DOES NOT AFFECT FUNCTION OF THE CONNECTOR.
12. THE WIDTH OF THE NARROW SLOTS SHOULD BE .114-.129/2.90-3.28 (MIN-MAX) IF KEYING OF THE CONNECTOR TO THE CUT-OUT IS DESIRED.

THIS DRAWING CONTAINS INFORMATION THAT IS PROPRIETARY TO MOLEX ELECTRONIC TECHNOLOGIES, LLC AND SHOULD NOT BE USED WITHOUT WRITTEN PERMISSION

DIMENSION UNITS	SCALE
MM/INCH	NTS

GENERAL TOLERANCES (UNLESS SPECIFIED)

	MM	INCH
4 PLACES	±	±
3 PLACES	±	± 0.0157
2 PLACES	± 0.4	± 0.02
1 PLACE	± 0.5	±
0 PLACES	±	±
ANGULAR TOL	± 3.0 °	

DRAFT WHERE APPLICABLE MUST REMAIN WITHIN DIMENSIONS

CURRENT REV DESC:

EC NO: 768253
DRWN: ZIXUAQ 2023/03/29
CHK'D: XQZHANG 2023/11/13
APPR: XQZHANG 2023/11/13

INITIAL REVISION:
DRWN: MKIPPER 2020/10/23
APPR: FSMITH 2021/10/21

THIRD ANGLE PROJECTION | DRAWING: C-SIZE | SERIES: 44133

molex

MICROFIT 3.0 BMI DUAL ROW RECEPTACLE PANEL MOUNT, V-0 AND GLOW WIRE

PRODUCT CUSTOMER DRAWING

DOCUMENT NUMBER	DOC TYPE	DOC PART	REVISION
441330011-SD	PSD	000	A3

MATERIAL NUMBER	CUSTOMER	SHEET NUMBER
SEE CHART	GENERAL MARKET	1 OF 2

DOCUMENT STATUS	P1	RELEASE DATE	2023/11/13 09:47:42

FORMAT: Eng-tega-master-tb-prod-C
REVISION: E1
DATE: 2021/05/21

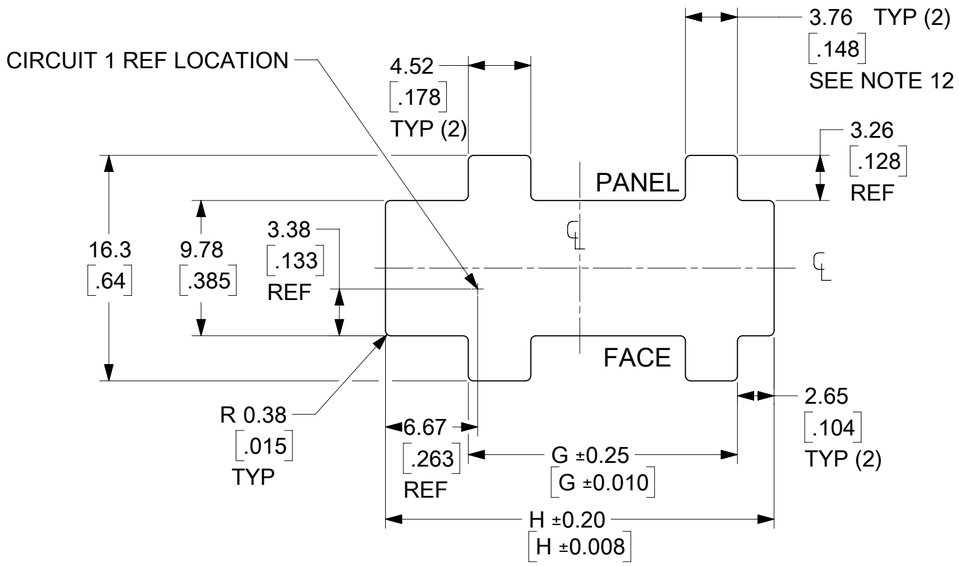

RECOMMENDED PANEL CUTOUT

(SEE NOTES 7, 9, AND 12)

CIRCUIT SIZE	DIM "G"	DIM "H"
4	13.46 / .530	22.10 / .870
6	16.46 / .648	25.10 / .988
8	19.46 / .766	28.10 / 1.106
10	22.46 / .884	31.10 / 1.224
12	25.46 / 1.002	34.10 / 1.343
14	28.46 / 1.120	37.10 / 1.461
16	31.46 / 1.239	40.10 / 1.579
18	34.46 / 1.357	43.10 / 1.697
20	37.46 / 1.475	46.10 / 1.815
22	40.46 / 1.593	49.10 / 1.933
24	43.46 / 1.711	52.10 / 2.051

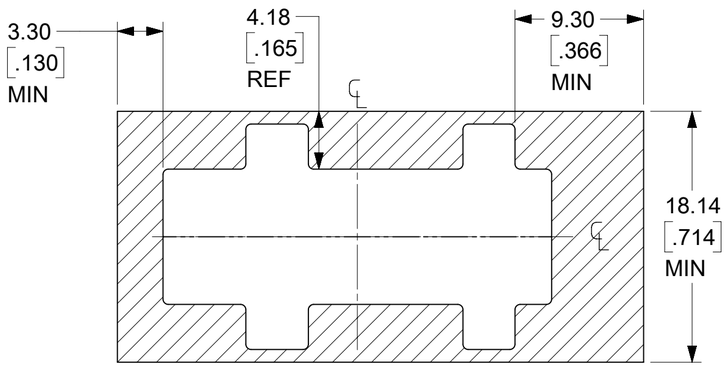

KEEPOUT AREA

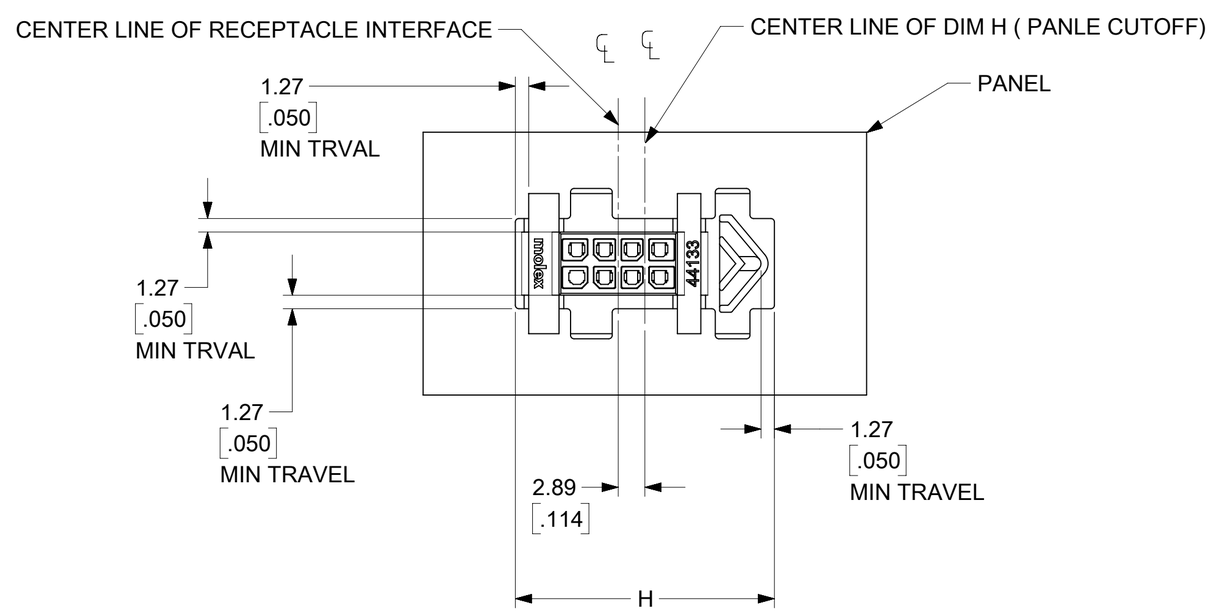

RECEPTACLE SHOWN MOUNTED IN PANEL

THIS DRAWING CONTAINS INFORMATION THAT IS PROPRIETARY TO MOLEX ELECTRONIC TECHNOLOGIES, LLC AND SHOULD NOT BE USED WITHOUT WRITTEN PERMISSION

DIMENSION UNITS	SCALE
MM/INCH	NTS

GENERAL TOLERANCES (UNLESS SPECIFIED)

	MM	INCH
4 PLACES	±	±
3 PLACES	±	± 0.0157
2 PLACES	± 0.4	± 0.02
1 PLACE	± 0.5	±
0 PLACES	±	±
ANGULAR TOL	± 3.0 °	

DRAFT WHERE APPLICABLE MUST REMAIN WITHIN DIMENSIONS

CURRENT REV DESC:

EC NO: 768253
DRWN: ZIXUAQ 2023/03/29
CHK'D: XQZHANG 2023/11/13
APPR: XQZHANG 2023/11/13

INITIAL REVISION:
DRWN: MKIPPER 2020/10/23
APPR: FSMITH 2021/10/21

THIRD ANGLE PROJECTION | DRAWING: C-SIZE | SERIES: 44133

molex

MICROFIT 3.0 BMI DUAL ROW RECEPTACLE PANEL MOUNT, V-0 AND GLOW WIRE

PRODUCT CUSTOMER DRAWING

DOCUMENT NUMBER	DOC TYPE	DOC PART	REVISION
441330011-SD	PSD	000	A3

MATERIAL NUMBER	CUSTOMER	SHEET NUMBER
	GENERAL MARKET	2 OF 2

DOCUMENT STATUS	P1	RELEASE DATE	2023/11/13 09:47:42

FORMAT: Eng-legs-master-lb-prod-C
REVISION: E1
DATE: 2021/05/01