© – TE Connectivity. All Rights Reserved.

REVISIONS					
P	LTR	DESCRIPTION	DATE	DWN	APVD
	H	REVISED PER ECR-25-253172	13OCT2025	CM	AN

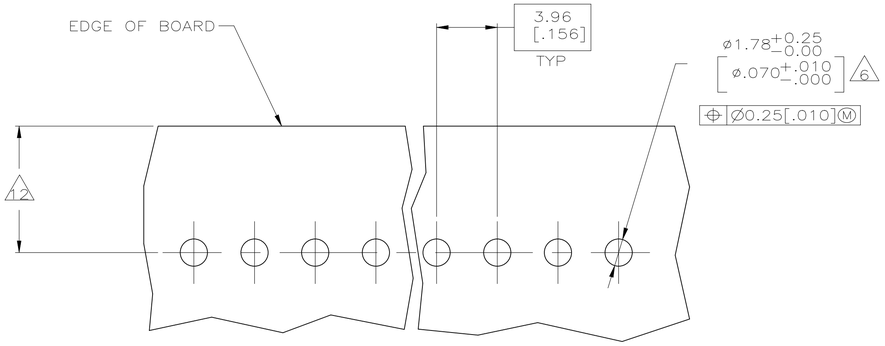

RECOMMENDED MOUNTING HOLE PATTERN FOR .109±0.016 THICK P.C. BOARD 2

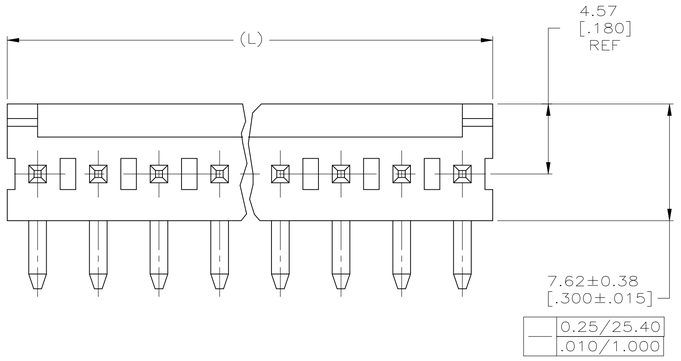

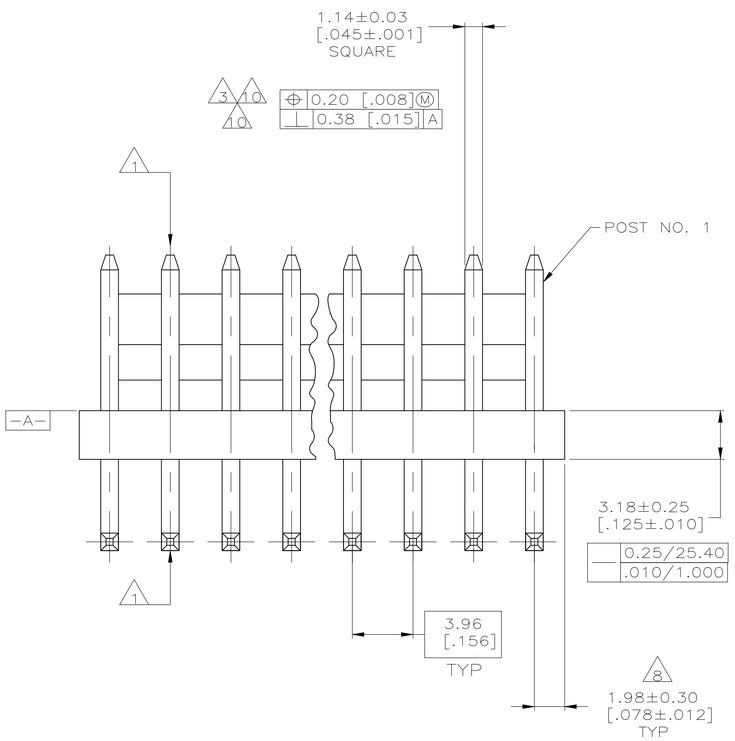

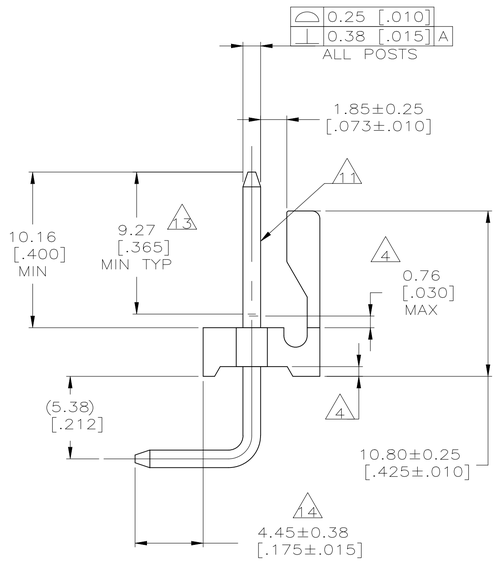

1 POST TO WITHSTAND 13 NEWTONS (3 LBS) MINIMUM AXIAL FORCE IN BOTH DIRECTIONS SHOWN WITHOUT DISLODGING.

2 TOLERANCES APPLY TO SOLDER SIDE OF BOARD.

3 MEASURED AT SURFACE –A– .

4 PLASTIC FLASH PERMITTED IN THIS AREA.

5 PARTS COMPLY WITH AMP SOLDERABILITY SPEC. NO. 109-11-2.

6 ONE HOLE MAY BE UNDERSIZED 1.65/1.52 [.065/.060] DIA. FOR ASSEMBLY RETENTION DURING WAVE SOLDERING.

7 MATERIAL: HEADER–THERMOPLASTIC POLYESTER GLASS–FILLED 94V–0 (NATURAL)
POST–COPPER ALLOY (SEE NOTES 13 & 14 FOR PLATING)

8 COORDINATE DIMENSION APPLIES FROM CENTER OF ACTUAL FEATURE.

9 PLASTIC BURRS CAUSED BY CUT–OFF TOOLING ARE PERMITTED WITHIN THE MAXIMUM TOLERANCE ENVELOPE.

10 POST TO BE MEASURED WHEN STRIP IS HELD FLAT.

11 POST MUST WITHSTAND TWO 90° BENDS AGAINST EXTRUSION WITHOUT BREAKING.

12 DIMENSION SHOULD BE 8.26–10.16 [.325–.400] MIN WHEN MATING WITH A MTA–156 CONNECTOR ASSEMBLY OR 8.26–8.76 [.325–.345] MIN WHEN MATING WITH A SL–156 CONNECTOR ASSEMBLY.

13 PLATING: GOLD PLATE AREA, 0.00076 [.000030] GOLD OR 0.00008 [.000003] MIN GOLD FLASH OVER 0.00068 [.000027] PALLADIUM NICKEL,ONLY IN FUNCTIONAL CONTACT AREA AND OTHER AREAS WITH OPTIMIZED THICKNESS PER TE CONNECTIVITY'S DISCRETION, ALL SIDES, OVER NICKEL UNDERPLATE, 0.00127 [.000050] MIN, ALL SIDES AND ENTIRE LENGTH OF POST.

14 PLATING: BRIGHT TIN/LEAD (93/7) PLATE AREA, 0.00381–0.00889 [.000150–.000350] THICK, ALL FOUR SIDES 4.45 [.175] MINIMUM FOR –2 THRU –24.
MATTE TIN PLATE AREA 0.00381–0.00889 [.000150–.000350] THICK ALL FOUR SIDES, 4.45 [.175] FOR –32 THRU –54.

15 OBSOLETE PARTS: OBSOLETE CIS STREAMLINING PER D.RENAUD/D.SINISI

16 OBSOLETE PART NUMBER

LEAD FREE				CONTAINS LEAD					
95.10 [3.744]	24	5-644761-4		S/B 5-644761-4	95.10 [3.744]	24	15	~~2-644761-4~~
91.14 [3.588]	23	5-644761-3		S/B 5-644761-3	91.14 [3.588]	23	15	~~2-644761-3~~
87.17 [3.432]	22	5-644761-2		S/B 5-644761-2	87.17 [3.432]	22	15	~~2-644761-2~~
83.21 [3.276]	21	5-644761-1		S/B 5-644761-1	83.21 [3.276]	21	15	~~2-644761-1~~
79.25 [3.120]	20	5-644761-0		S/B 5-644761-0	79.25 [3.120]	20	15	~~2-644761-0~~
75.29 [2.964]	19	4-644761-9		S/B 4-644761-9	75.29 [2.964]	19	15	~~1-644761-9~~
71.32 [2.808]	18	4-644761-8		S/B 4-644761-8	71.32 [2.808]	18	15	~~1-644761-8~~
67.36 [2.652]	17	4-644761-7		S/B 4-644761-7	67.36 [2.652]	17	15	~~1-644761-7~~
63.40 [2.496]	16	4-644761-6		S/B 4-644761-6	63.40 [2.496]	16	15	~~1-644761-6~~
59.44 [2.340]	15	4-644761-5		S/B 4-644761-5	59.44 [2.340]	15	15	~~1-644761-5~~
55.47 [2.184]	14	4-644761-4		S/B 4-644761-4	55.47 [2.184]	14	15	~~1-644761-4~~
51.51 [2.028]	13	4-644761-3		S/B 4-644761-3	51.51 [2.028]	13	15	~~1-644761-3~~
47.55 [1.872]	12	4-644761-2		S/B 4-644761-2	47.55 [1.872]	12	15	~~1-644761-2~~
43.59 [1.716]	11	4-644761-1		S/B 4-644761-1	43.59 [1.716]	11	15	~~1-644761-1~~
39.62 [1.560]	10	4-644761-0		S/B 4-644761-0	39.62 [1.560]	10	15	~~1-644761-0~~
35.66 [1.404]	9	3-644761-9		S/B 3-644761-9	35.66 [1.404]	9	15	~~644761-9~~
31.70 [1.248]	8	3-644761-8		S/B 3-644761-8	31.70 [1.248]	8	15	~~644761-8~~
27.74 [1.092]	7	3-644761-7		S/B 3-644761-7	27.74 [1.092]	7	15	~~644761-7~~
23.77 [.936]	6	3-644761-6			23.77 [.936]	6	16	~~644761-6~~
19.81 [.780]	5	3-644761-5		S/B 3-644761-5	19.81 [.780]	5	15	~~644761-5~~
15.85 [.624]	4	3-644761-4		S/B 3-644761-4	15.85 [.624]	4	15	~~644761-4~~
11.89 [.468]	3	3-644761-3		S/B 3-644761-3	11.89 [.468]	3	15	~~644761-3~~
7.92 [.312]	2	3-644761-2		S/B 3-644761-2	7.92 [.312]	2	15	~~644761-2~~
DIM (L)	NO.OF POSN	ASSEMBLY			DIM (L)	NO.OF POSN		ASSEMBLY

THIS DRAWING IS A CONTROLLED DOCUMENT.

DIMENSIONS: mm [INCHES]

TOLERANCES UNLESS OTHERWISE SPECIFIED:
0 PLC ± –
1 PLC ± –
2 PLC ± 0.13[.005]
3 PLC ± –
4 PLC ± –
ANGLES ± –

MATERIAL 7

FINISH 7

DWN S. HOOVER	07NOV02	TE Connectivity
CHK D. BOSSI	07NOV02	
APVD D. BOSSI	07NOV02	NAME MTA-.156 HEADER ASSEMBLY, FRICTION LOCK, RIGHT ANGLE, FRONT BEND, .045 SQUARE POST, .000030 GOLD, SPECIAL
PRODUCT SPEC –		
APPLICATION SPEC –		SIZE A1 · CAGE CODE 00779 · DRAWING NO C-644761 · RESTRICTED TO –
WEIGHT –		
CUSTOMER DRAWING		SCALE 5:1 · SHEET 1 OF 1 · REV H