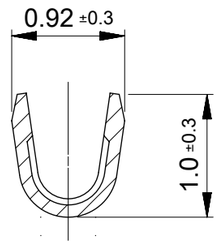

SECTION Z-Z

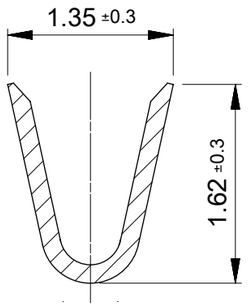

SECTION Y-Y

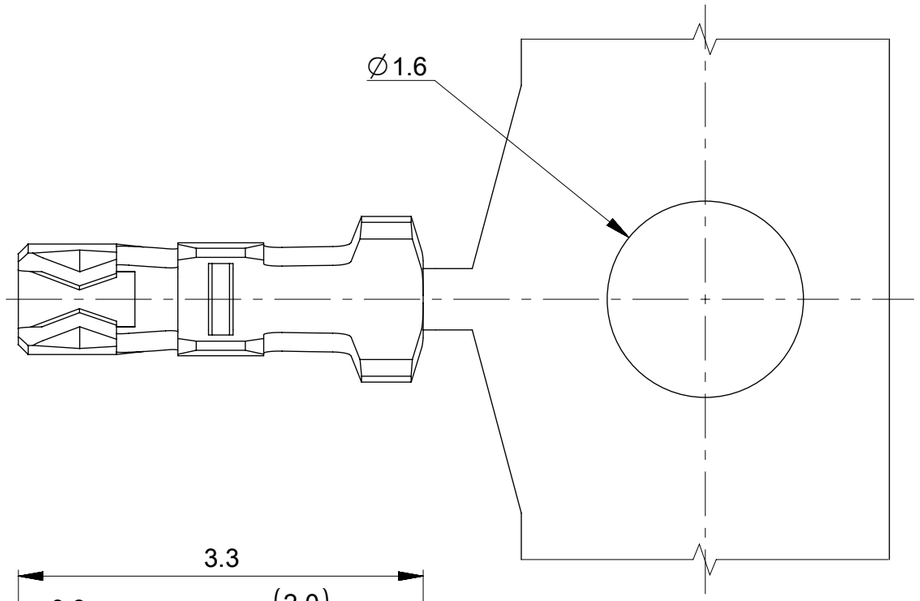

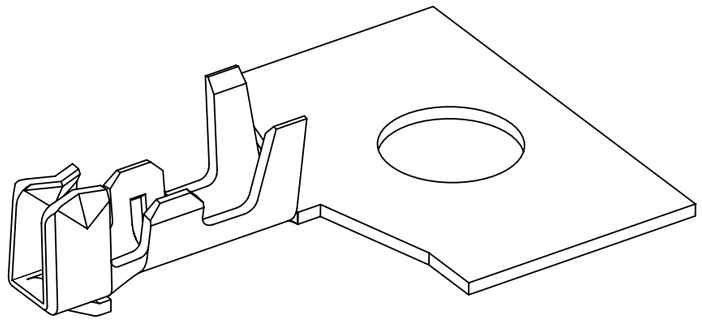

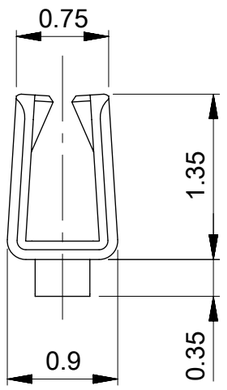

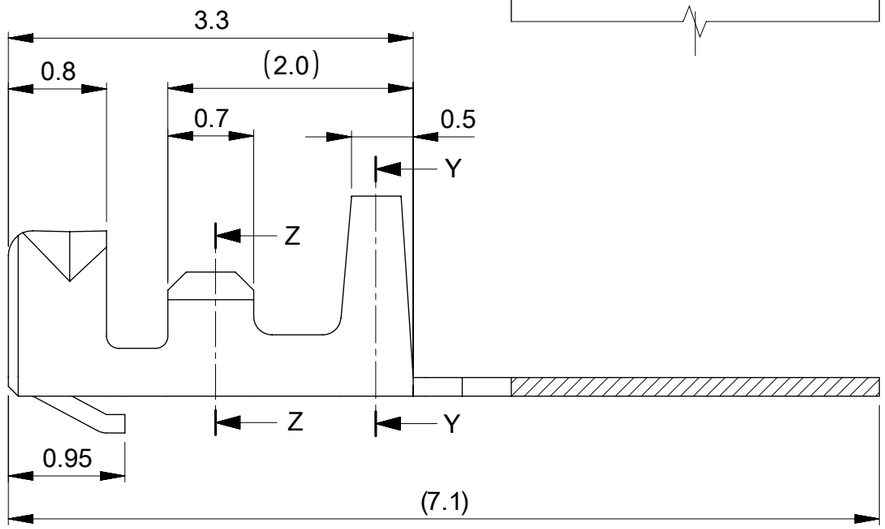

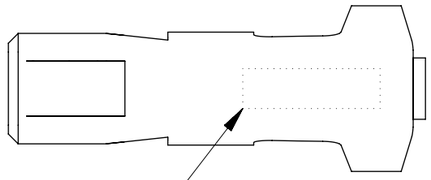

トレードマーク
TRADE MARK

NOTE

1. 材料及び仕上げ(めっき仕様) : TABLE 1 参照
   MATERIAL AND FINISHES : SEE TABLE 1
2. 適合製品および各種仕様書についてはSHEET 2 を参照。
   PLEASE REFER TO SHEET 2 FOR
   APPLICABLE PRODUCTS AND SPECIFICATIONS.
3. 本製品は金めっき品です。
   錫めっき品についてはSD-50058-8*00を参照ください。
   THIS PRODUCT IS GOLD PLATING TYPE.
   PLEASE REFER TO SD-50058-8*00 FOR TIN PLATING TYPE.

1 TABLE1

部品 PART	材質 MATERIAL	
ターミナル TERMINAL	りん青銅 PHOSPHOR BRONZE	
	コンタクト部 CONTACT AREA	金めっき: 表参照 GOLD PLATING: SEE CHART
	下地めっき UNDER PLATING	ニッケルめっき: 1.0 micro-meter MIN NICKEL PLATING: 1.0 micro-meter MIN

Φ1.0 MAX	AWG#28-32	0.38 micro-meters MIN	リール REEL	連鎖状 CHAIN	500588025
		FLASH			500588020
被覆外径 INS RANGE	適用電線範囲 WIRE RANGE	接点部金めっき厚 PLATING THICKNESS AT CONTACT AREA	梱包形態 PACKING	端子形状 FORM	オーダー番号 ORDER NO

THIS DRAWING CONTAINS INFORMATION THAT IS PROPRIETARY TO MOLEX ELECTRONIC TECHNOLOGIES, LLC AND SHOULD NOT BE USED WITHOUT WRITTEN PERMISSION

DIMENSION UNITS	SCALE
mm	NTS

GENERAL TOLERANCES (UNLESS SPECIFIED)

ANGULAR TOL	±	3.0 °
4 PLACES	±	0.2
3 PLACES	±	0.2
2 PLACES	±	0.2
1 PLACE	±	0.2
0 PLACES	±	0.2

DRAFT WHERE APPLICABLE MUST REMAIN WITHIN DIMENSIONS

CURRENT REV DESC: REVISED

EC NO: 643451
DRWN: HHUSSIN 2020/08/05
CHK'D: SAKIYAMA 2021/05/27
APPR: KOMURAKAMI 2021/05/27

INITIAL REVISION:
DRWN: SOBARA01 2017/11/27
APPR: SAKIYAMA 2019/02/01

THIRD ANGLE PROJECTION | DRAWING: A3-SIZE | SERIES: 50058

molex

PICOBLADE 1.25 GOLD PLATING
AWG28-32 RECEPTACLE CRIMP TERMINAL

PRODUCT CUSTOMER DRAWING

DOCUMENT NUMBER	DOC TYPE	DOC PART	REVISION
500580000-SD	PSD	000	B

MATERIAL NUMBER	CUSTOMER	SHEET NUMBER
SEE CHART	GENERAL	1 OF 2

DOCUMENT STATUS	P1	RELEASE DATE	2021/05/27 10:21:14

FORMAT: master-tb-prod-A3
REVISION: J
DATE: 2020/01/14

△2 適合製品および各種仕様書
APPLICABLE PRODUCTS AND SPECIFICATIONS

梱包仕様書 PACKING SPECIFICATION	PART NUMBER	SPECIFICATION NUMBER
	50058802*	500589200SPK

適合ハウジング APPLICABLE HOUSING	SINGLE TYPE
シリーズ番号　SERIES NO	51021

適合嵌合相手 MATE WITH	SMT		THROUGH HOLE	
	GOLD PLATING		GOLD PLATING	
	VERTICAL	RIGHT ANGLE	VERTICAL	RIGHT ANGLE
シリーズ番号　SERIES NO	53398	53261	53047	53048
製品仕様書 PRODUCT SPECIFICATION	510210001-PS PS 000		510210000-PS PS 001	510210000-PS PS 000
アプリケーション仕様書(取扱説明書) APPLICATION SPECIFICATION	510210000-AS PS 000			

製品嵌合図は各"適合嵌合相手”図面参照のこと
MATING VIEW: REFER TO EACH "MATE WITH" PART DRAWING.

THIS DRAWING CONTAINS INFORMATION THAT IS PROPRIETARY TO MOLEX ELECTRONIC TECHNOLOGIES, LLC AND SHOULD NOT BE USED WITHOUT WRITTEN PERMISSION

DIMENSION UNITS	SCALE
mm	NTS

GENERAL TOLERANCES (UNLESS SPECIFIED)		
ANGULAR TOL	±	3.0 °
4 PLACES	±	0.2
3 PLACES	±	0.2
2 PLACES	±	0.2
1 PLACE	±	0.2
0 PLACES	±	0.2

DRAFT WHERE APPLICABLE MUST REMAIN WITHIN DIMENSIONS

CURRENT REV DESC: REVISED

EC NO: 643451
DRWN: HHUSSIN 2020/08/05
CHK'D: SAKIYAMA 2021/05/27
APPR: KOMURAKAMI 2021/05/27

INITIAL REVISION:
DRWN: SOBARA01 2017/11/27
APPR: SAKIYAMA 2019/02/01

molex

PICOBLADE 1.25 GOLD PLATING
AWG28-32 RECEPTACLE CRIMP TERMINAL

PRODUCT CUSTOMER DRAWING

THIRD ANGLE PROJECTION	DRAWING	SERIES	MATERIAL NUMBER	CUSTOMER	SHEET NUMBER
	A3-SIZE	50058	SEE CHART	GENERAL	2 OF 2

DOCUMENT NUMBER	DOC TYPE	DOC PART	REVISION
500580000-SD	PSD	000	B

DOCUMENT STATUS	P1	RELEASE DATE	2021/05/27 10:21:14

FORMAT: master-tb-prod-A3
REVISION: J
DATE: 2020/01/14